UL 2594

STANDARD FOR SAFETY

Electric Vehicle Supply Equipment

Documents
Document Sharing Hub

Copyright UL
Provided by IHS under license with UL
No reproduction or networking permitted without license from IHS
Full document details: UL 2594 2013

Licensee=North Carolina State Univ/5618801100
Not for Resale, 07/06/2013 22:41:15 MDT

UL COPYRIGHTED MATERIAL –
NOT AUTHORIZED FOR FURTHER REPRODUCTION OR
DISTRIBUTION WITHOUT PERMISSION FROM UL

Documents
Document Sharing Hub

Copyright UL
Provided by IHS under license with UL
No reproduction or networking permitted without license from IHS
Full document details: UL 2594 2013

Licensee=North Carolina State Univ/5618801100
Not for Resale, 07/06/2013 22:41:15 MDT

UL Standard for Safety for Electric Vehicle Supply Equipment, UL 2594

First Edition, Dated February 22, 2013

Summary of Topics

This First Edition of the Standard for Electric Vehicle Supply Equipment, UL 2594, is being issued as a Trinational Standard with ANCE and CSA.

The new requirements are substantially in accordance with Proposal(s) on this subject dated June 22, 2012 and November 30, 2012.

All rights reserved. No part of this publication may be reproduced, stored in a retrieval system, or transmitted in any form by any means, electronic, mechanical photocopying, recording, or otherwise without prior permission of UL.

UL provides this Standard ″as is″ without warranty of any kind, either expressed or implied, including but not limited to, the implied warranties of merchantability or fitness for any purpose.

In no event will UL be liable for any special, incidental, consequential, indirect or similar damages, including loss of profits, lost savings, loss of data, or any other damages arising out of the use of or the inability to use this Standard, even if UL or an authorized UL representative has been advised of the possibility of such damage. In no event shall UL's liability for any damage ever exceed the price paid for this Standard, regardless of the form of the claim.

Users of the electronic versions of UL's Standards for Safety agree to defend, indemnify, and hold UL harmless from and against any loss, expense, liability, damage, claim, or judgment (including reasonable attorney's fees) resulting from any error or deviation introduced while purchaser is storing an electronic Standard on the purchaser's computer system.

The requirements in this Standard are now in effect, except for those paragraphs, sections, tables, figures, and/or other elements of the Standard having future effective dates as indicated in the preface. The prior text for requirements that have been revised and that have a future effective date are located after the Standard, and are preceded by a ″SUPERSEDED REQUIREMENTS″ notice.

UL COPYRIGHTED MATERIAL –
NOT AUTHORIZED FOR FURTHER REPRODUCTION OR
DISTRIBUTION WITHOUT PERMISSION FROM UL

Documents
Document Sharing Hub

Copyright UL
Provided by IHS under license with UL
No reproduction or networking permitted without license from IHS
Full document details: UL 2594 2013

Licensee=North Carolina State Univ/5618801100
Not for Resale, 07/06/2013 22:41:15 MDT

No Text on This Page

UL COPYRIGHTED MATERIAL –
NOT AUTHORIZED FOR FURTHER REPRODUCTION OR
DISTRIBUTION WITHOUT PERMISSION FROM UL

Documents
Document Sharing Hub

Copyright UL
Provided by IHS under license with UL
No reproduction or networking permitted without license from IHS
Full document details: UL 2594 2013

Licensee=North Carolina State Univ/5618801100
Not for Resale, 07/06/2013 22:41:15 MDT

Association of Standardization and Certification
NMX-J-677-ANCE-2013
First Edition

CSA Group
CSA C22.2 No. 280-13
First Edition

Underwriters Laboratories Inc.
UL 2594
First Edition

Standard for Electric Vehicle Supply Equipment

February 22, 2013

ANSI/UL 2594-2013

UL COPYRIGHTED MATERIAL –
NOT AUTHORIZED FOR FURTHER REPRODUCTION OR
DISTRIBUTION WITHOUT PERMISSION FROM UL

Documents
Document Sharing Hub

Copyright UL
Provided by IHS under license with UL
No reproduction or networking permitted without license from IHS
Full document details: UL 2594 2013

Licensee=North Carolina State Univ/5618801100
Not for Resale, 07/06/2013 22:41:15 MDT

Commitment for Amendments

This standard is issued jointly by the Association of Standardization and Certification (ANCE), the Canadian Standards Association (operating as "CSA Group"), and Underwriters Laboratories Inc. (UL). Comments or proposals for revisions on any part of the standard may be submitted to ANCE, CSA Group, or UL at any time. Revisions to this standard will be made only after processing according to the standards development procedures of ANCE, CSA Group, and UL. CSA Group and UL will issue revisions to this standard by means of a new edition or revised or additional pages bearing their date of issue. ANCE will incorporate the same revisions into a new edition of the standard bearing the same date of issue as the CSA Group and UL pages.

Copyright © 2013 ANCE

Rights reserved in favor of ANCE.

ISBN 978-1-55491-813-3 © 2013 CSA Group

All rights reserved. No part of this publication may be reproduced in any form whatsoever without the prior permission of the publisher.

To purchase CSA Group Standards and related publications, visit CSA Group's Online Store at shop.csa.ca or call toll-free 1-800-463-6727 or 416-747-4044.

This Standard is subject to periodic review, and suggestions for its improvement will be referred to the appropriate committee. To submit a proposal for change, please send the following information to inquires@csagroup.org and include ″Proposal for change″ in the subject line: Standard designation (number); relevant clause, table, and/or figure number; wording of the proposed change; and rationale for the change.

Copyright © 2013 Underwriters Laboratories Inc.

UL's Standards for Safety are copyrighted by UL. Neither a printed nor electronic copy of a Standard should be altered in any way. All of UL's Standards and all copyrights, ownerships, and rights regarding those Standards shall remain the sole and exclusive property of UL.

This ANSI/UL Standard for Safety consists of the First Edition.

The most recent designation of ANSI/UL 2594 as an American National Standard (ANSI) occurred on February 22, 2013. ANSI approval for a standard does not include the Cover Page, Transmittal Pages, Title Page (front and back), or the Preface.

Comments or proposals for revisions on any part of the Standard may be submitted to UL at any time. Proposals should be submitted via a Proposal Request in UL's On-Line Collaborative Standards Development System (CSDS) at http://csds.ul.com.

To purchase UL Standards, visit Comm 2000 at http://www.comm-2000.com/help/how_to_order.aspx or call toll-free 1-888-853-3503.

UL COPYRIGHTED MATERIAL –
NOT AUTHORIZED FOR FURTHER REPRODUCTION OR
DISTRIBUTION WITHOUT PERMISSION FROM UL

Documents
Document Sharing Hub

Copyright UL
Provided by IHS under license with UL
No reproduction or networking permitted without license from IHS
Full document details: UL 2594 2013

Licensee=North Carolina State Univ/5618801100
Not for Resale, 07/06/2013 22:41:15 MDT

CONTENTS

Preface 7

INTRODUCTION

1 Scope 9
2 Units of Measurement 10
3 Components 10
4 Normative References 10
5 Definitions 10

CONSTRUCTION

6 General 14
6.1 EV cord sets 14
6.2 EV charging stations 15
6.3 EV power outlets 16
7 Frame and Enclosure 16
7.1 General 16
7.2 Access covers 17
7.3 Metallic enclosures 17
7.4 Nonmetallic enclosures 20
7.5 Openings in enclosures 21
7.6 Mechanical strength of enclosures 31
7.7 Environmental considerations 31
8 Protection of Users – Accessibility and User Servicing 31
8.1 General 31
8.2 Accessibility 31
8.3 User servicing 34
9 Protection Against Electric Shock 34
9.1 General 34
9.2 Personnel protection systems 35
9.3 Stored energy on capacitors 35
10 Corrosion Protection Against Electric Shock 35
11 Mechanical Assembly 35
12 Supply Connections 36
12.1 Permanently connected devices 36
12.2 Cord connected devices 44
12.3 Direct plug-in devices 47
13 Output Connections and Wiring 52
13.1 General 52
13.2 Strain relief 54
13.3 Bushings 54
14 Equipment Grounding 54
15 Bonding 59
16 EV Bonding 62
17 Internal Wiring 62
17.1 Wires 62
17.2 Protection of wires 62
18 Flammability 63
19 Current Carrying Parts 64

UL COPYRIGHTED MATERIAL –
NOT AUTHORIZED FOR FURTHER REPRODUCTION OR
DISTRIBUTION WITHOUT PERMISSION FROM UL

Documents
Document Sharing Hub

Copyright UL
Provided by IHS under license with UL
No reproduction or networking permitted without license from IHS
Full document details: UL 2594 2013

Licensee=North Carolina State Univ/5618801100
Not for Resale, 07/06/2013 22:41:15 MDT

20 Electrical Connections 64
21 Gaskets 65
22 Spacings 65
22.1 General 65
22.2 Insulation barriers 67
23 Alternate Spacings – Clearances and Creepage Distances 68
24 Separation of Circuits 68
24.1 Factory wiring 68
24.2 Separation barriers 69
24.3 Field wiring 69
25 Control Circuits 69
25.1 Secondary control circuits 69
25.2 Primary control circuits 71
26 Switches and controls 72
27 Capacitors, Resistors, and Suppressors 73
27.1 Capacitors 73
27.2 Resistors 74
27.3 Suppressors 74
28 Supplementary Overcurrent Protective Devices 74
28.1 General 74
28.2 Supplementary protection 75
28.3 User replaceable protection devices 76
29 Transformers 76
29.1 General 76
29.2 Coil insulation 77
30 Printed Wiring Boards 79
31 Insulating Materials 79
32 Protection of Service Personnel 79
33 Electronic Protection Circuits 80
34 Cord Reels 81
35 Luminaires 81

PROTECTION OF USERS AGAINST INJURY

36 General 82
37 Sharp Edges 82
38 Enclosures and Guards 83
39 Strength of Enclosures 83
40 Surface Temperatures 83
41 Stability 84
42 Mounting Means 85
43 Strength of Handles 85
44 Height of Coupling Means 85

PERFORMANCE

45 General 85
46 Leakage Current Test 86
47 Leakage Current Test Following Humidity Conditioning 90
48 Input Test 90
49 Temperature Test 90
50 Capacitor Discharge Test 93
51 Dielectric Voltage Withstand Test 94

UL COPYRIGHTED MATERIAL –
NOT AUTHORIZED FOR FURTHER REPRODUCTION OR
DISTRIBUTION WITHOUT PERMISSION FROM UL
Documents
Document Sharing Hub

Copyright UL
Provided by IHS under license with UL
No reproduction or networking permitted without license from IHS
Full document details: UL 2594 2013

Licensee=North Carolina State Univ/5618801100
Not for Resale, 07/06/2013 22:41:15 MDT

51.1 General 94
51.2 Maximum voltage measurements 95
51.3 AC and DC power circuits (primary) 95
51.4 Secondary circuits 96
51.5 Induced potential 96
52 Abnormal Tests 97
52.1 General 97
52.2 Transformer burnout test 98
52.3 Transformer overload test 100
52.4 Short circuit test 101
52.5 Capacitor fault test 102
52.6 Forced ventilation test 102
52.7 Component fault tests 102
52.8 Electrolytic capacitor fault test 102
52.9 Vibration test 103
53 Flanged Bobbin Transformer Abnormal Test 103
54 Strain Relief Tests 105
54.1 General 105
54.2 Pull strain relief test 105
54.3 Push back strain relief test 106
55 EV Cable Secureness Test 106
56 Grounding Tests 107
56.1 Ground impedance test 107
56.2 Ground continuity test 108
57 Impact Test 108
58 Vehicle Drive Over Test 110
59 Drop Test 110
60 Strength of Terminal Insulating Base and Support 110
61 Impact on Glass Covers 110
62 Bonding Conductor Tests 111
62.1 General 111
62.2 Current test 111
62.3 Limited short circuit test 111
63 Evaluation of Reduced Spacings on Printed Wiring Boards 112
64 Mounting Means Test 112
65 Strength of Handles 112
66 Mold Stress-Relief Distortion Test 113
67 Additional Environmental Tests 113
67.1 General 113
67.2 Water exposure test 113
67.3 UV exposure 114
67.4 Chemical exposure 114
68 Tests for Permanence of Cord Tags 114
69 Tests on Transformer Insulating Materials 115
70 Harmonic Distortion 115
71 Metallic Coating Thickness Test 116
72 Overcurrent Protection Calibration Test 117

MARKINGS

73 General 118
74 Environmental Enclosure Markings 121
75 Cautionary Markings 121

UL COPYRIGHTED MATERIAL –
NOT AUTHORIZED FOR FURTHER REPRODUCTION OR
DISTRIBUTION WITHOUT PERMISSION FROM UL
Documents
Document Sharing Hub

Copyright UL
Provided by IHS under license with UL
No reproduction or networking permitted without license from IHS
Full document details: UL 2594 2013
Licensee=North Carolina State Univ/5618801100
Not for Resale, 07/06/2013 22:41:15 MDT

INSTRUCTIONS

76 General 124
77 Instructions Pertaining to Risk of Fire, Electric Shock, or Injury to Persons 125
78 Installation Instructions 130
79 Operating Instructions 131
80 User Maintenance Instructions 131
81 Moving, Transporting, and Storage Instructions 131

Annex A – Referenced Standards (Normative)

Annex B – Test Sequences and Sample Requirements (Informative)

B1 Test Summary 140
B2 Sample Requirements 142
B2.1 Type tests 142
B2.2 Environmental tests 143

Annex C – French and Spanish Translations (Informative)

C1 French and Spanish Translations 145

UL COPYRIGHTED MATERIAL –
NOT AUTHORIZED FOR FURTHER REPRODUCTION OR
DISTRIBUTION WITHOUT PERMISSION FROM UL

Documents
Document Sharing Hub

Copyright UL
Provided by IHS under license with UL
No reproduction or networking permitted without license from IHS
Full document details: UL 2594 2013

Licensee=North Carolina State Univ/5618801100
Not for Resale, 07/06/2013 22:41:15 MDT

Preface

This is the harmonized ANCE, CSA Group, and UL Standard for Electric Vehicle Supply Equipment. It is the First edition of NMX-J-677-ANCE, the First edition of CSA C22.2 No. 280, and the First edition of UL 2594.

This harmonized standard was prepared by the Association of Standardization and Certification (ANCE), CSA Group, and Underwriters Laboratories Inc. (UL). The efforts and support of the Technical Harmonization Working Group for Electric Vehicle Supply Equipment are gratefully acknowledged.

This standard is considered suitable for use for conformity assessment within the stated scope of the Standard.

The present Mexican Standard was reviewed and approved by the Comité de Normalización de la Asociación de Normalización y Certificación, A.C., CONANCE.

This standard was reviewed by the CSA Subcommittee on Electric Vehicle – Supply Equipment, under the jurisdiction of the CSA Technical Committee on Industrial Products and the CSA Strategic Steering Committee on Requirements for Electrical Safety, and has been formally approved by the CSA Technical Committee.

This standard has been approved by the American National Standards Institute (ANSI) as an American National Standard.

Where reference is made to a specific number of specimens to be tested, the specified number is to be considered a minimum quantity.

Note: Although the intended primary application of this standard is stated in its scope, it is important to note that it remains the responsibility of the users of the standard to judge its suitability for their particular purpose.

Level of harmonization

This standard uses the IEC format but is not based on, nor is considered equivalent to, an IEC standard.

This standard is published as an equivalent standard for ANCE, CSA Group, and UL.

An equivalent standard is a standard that is substantially the same in technical content, except as follows: Technical national differences are allowed for codes and governmental regulations as well as those recognized as being in accordance with NAFTA Article 905, for example, because of fundamental climatic, geographical, technological, or infrastructural factors, scientific justification, or the level of protection that the country considers appropriate. Presentation is word for word except for editorial changes.

Reasons for differences from IEC

This standard provides general requirements for electric vehicle supply equipment for use in accordance with the electrical installation codes of Canada, Mexico, and the United States. At present there is no IEC standard for these products for use in accordance with these codes. Therefore, this standard does not employ any IEC standard for base requirements.

UL COPYRIGHTED MATERIAL –
NOT AUTHORIZED FOR FURTHER REPRODUCTION OR
DISTRIBUTION WITHOUT PERMISSION FROM UL

Documents
Document Sharing Hub

Copyright UL
Provided by IHS under license with UL
No reproduction or networking permitted without license from IHS
Full document details: UL 2594 2013

Licensee=North Carolina State Univ/5618801100
Not for Resale, 07/06/2013 22:41:15 MDT

Interpretations

The interpretation by the standards development organization of an identical or equivalent standard is based on the literal text to determine compliance with the standard in accordance with the procedural rules of the standards development organization. If more than one interpretation of the literal text has been identified, a revision is to be proposed as soon as possible to each of the standards development organizations to more accurately reflect the intent.

ANCE effective date

The effective date for ANCE will be announced through the Diario Oficial de la Federación (Official Gazette) and is indicated on the cover page.

CSA Group effective date

The effective date for CSA Group will be announced through *CSA Informs* or a CSA Group certification notice.

UL effective date

As of February 22, 2013, all products Listed or Recognized by UL must comply with the requirements in this Standard.

A UL effective date is one established by Underwriters Laboratories Inc. and is not part of the ANSI approved standard.

UL COPYRIGHTED MATERIAL –
NOT AUTHORIZED FOR FURTHER REPRODUCTION OR
DISTRIBUTION WITHOUT PERMISSION FROM UL

Documents
Document Sharing Hub

Copyright UL
Provided by IHS under license with UL
No reproduction or networking permitted without license from IHS
Full document details: UL 2594 2013

Licensee=North Carolina State Univ/5618801100
Not for Resale, 07/06/2013 22:41:15 MDT

INTRODUCTION

1 Scope

1.1 This Standard covers conductive electric vehicle (EV) supply equipment with a primary source voltage of 600 V ac or less, with a frequency of 60 Hz, and intended to provide ac power to an electric vehicle with an on-board charging unit. This Standard covers electric vehicle supply equipment intended for use where ventilation is not required.

1.2 With reference to 1.1, the electric vehicle supply equipment covered by this Standard includes:

a) Portable EV Cord Sets – Rated 125 Vac maximum, 20 A maximum, intended for indoor and outdoor use;

b) Stationary EV Cord Sets – Rated 125 Vac maximum, 20 A maximum, intended for indoor and outdoor use;

c) Stationary EV Cord Sets – Rated 250 Vac maximum, 40 A maximum, intended for indoor use only;

d) Movable EV Charging Stations – Rated 125 Vac maximum, intended for indoor and outdoor use;

e) Movable EV Charging Stations – Rated 250 Vac maximum, 40 A maximum, intended for indoor use only;

f) Permanent EV Charging Station – Rated 600 Vac maximum, intended for indoor or indoor/outdoor use; or

g) Permanent EV Power Outlet – Rated 600 Vac maximum, intended for indoor or indoor/outdoor use.

EV Power Outlets provide a receptacle where one did not previously exist.

For Mexico, use 127 Vac where 120 or 125 Vac is referenced in this Standard. In Canada and the United States, this does not apply.

1.3 The products covered by this Standard are intended for use in accordance with the Installation Codes in Annex A, Ref. No.1.

1.4 This Standard does not cover cord sets or power supply cords for applications other than EV charging cord sets. For cord sets and power supply cords not covered by this Standard, refer to Annex A, Ref. No. 2 and No. 3.

1.5 With reference to 1.2, this Standard does not cover electric vehicle charging equipment. For EV charging equipment not covered by this Standard, refer to Annex A, Ref. No. 4.

UL COPYRIGHTED MATERIAL –
NOT AUTHORIZED FOR FURTHER REPRODUCTION OR
DISTRIBUTION WITHOUT PERMISSION FROM UL

Documents
Document Sharing Hub

Copyright UL
Provided by IHS under license with UL
No reproduction or networking permitted without license from IHS
Full document details: UL 2594 2013

Licensee=North Carolina State Univ/5618801100
Not for Resale, 07/06/2013 22:41:15 MDT

1.6 This Standard does not cover electric vehicle connectors. For electric vehicle connectors not covered by this Standard, refer to Annex A, Ref. No. 5

1.7 This Standard does not cover regular-use power outlets. For regular-use power outlets not covered by this Standard, refer to Annex A, Ref. No. 6.

2 Units of Measurement

2.1 The values given in SI (metric) units shall be normative. Any other values given shall be for information purposes only.

3 Components

3.1 Except as indicated in 3.2, a component used as a part of a unit covered by this Standard shall comply with the requirements for that component.

3.2 A component is not required to comply with a specific requirement that:

a) Involves a feature or characteristic not required in the application of the component in the product covered by this Standard, or

b) Is superseded by a requirement in this Standard.

3.3 A component shall be used in accordance with its rating established for the intended conditions of use.

3.4 Specific components are incomplete in construction features or restricted in performance capabilities. Such components are intended for use only under limited conditions, such as certain temperatures not exceeding specified limits, and shall be used only under those specific conditions.

4 Normative References

4.1 Where reference is made to any Standard, such reference shall be considered to refer to the latest editions and revisions thereto available at the time of printing, unless otherwise specified.

4.2 Products covered by this Standard shall comply with the reference installation codes and Standards noted in Annex A as appropriate for the country where the product is to be used. When the product is intended for use in more than one country, the product shall comply with the installation codes and Standards for all countries where it is intended to be used.

5 Definitions

5.1 For the purposes of this Standard, the following definitions apply. In addition, in the text of this document, the term “device” refers to the product covered by this Standard.

5.2 ACCESSIBLE – Able to be contacted by an accessibility probe.

5.3 BONDED (BONDING) – The permanent joining of metallic parts to form an electrically conductive path that provides electrical continuity and the capacity to conduct any current likely to be imposed without a risk of electric shock or fire.

Note: See Figure 11 for an illustration of the terms “grounding” and “bonding” with corresponding terms for Canada and Mexico.

UL COPYRIGHTED MATERIAL –
NOT AUTHORIZED FOR FURTHER REPRODUCTION OR
DISTRIBUTION WITHOUT PERMISSION FROM UL

Documents
Document Sharing Hub

Copyright UL
Provided by IHS under license with UL
No reproduction or networking permitted without license from IHS
Full document details: UL 2594 2013

Licensee=North Carolina State Univ/5618801100
Not for Resale, 07/06/2013 22:41:15 MDT

5.4 CHARGING CIRCUIT INTERRUPTING DEVICE (CCID) – A device that continuously monitors the differential current among all of the current-carrying line conductors in a grounded system and rapidly interrupts the circuit under conditions where the differential current exceeds the ground-fault trip threshold of the charging circuit interrupting device. The device is identified by the letters CCID followed by the differential trip current rating of either 5 or 20 mA.

5.5 CHARGING STATION, MOVABLE – A device used to provide power to an on-board charger. The device is cord connected and intended to be occasionally moved from charging location to another charging location.

5.6 CHARGING STATION, PERMANENT – A device used to provide power to an on-board charger. The device is permanently wired and fixed in place to the supporting surface, a wall, a pole, or other structure.

5.7 CONTROL CIRCUIT – A circuit that carries electric signals but not main power current.

5.8 COMMERCIAL GARAGE – A facility, or portion of a facility, used for the repair of internal combustion engine vehicles, in which the area may be classified due to vapors of flammable liquids (gasoline) being present.

5.9 CORD SET, PORTABLE – An EV cord set that is intended for indoor or outdoor use, and is intended to be carried from charging location to charging location and is transported in the vehicle when not in use. This type of cord set will be subject to changing environmental conditions and all foreseeable abuses. See 6.1.1.

5.10 CORD SET, STATIONARY – An EV cord set that is intended for indoor or outdoor use, and is intended to be installed in a dedicated location in order to charge a vehicle. The cord set may be intended to be routinely moved after this installation, and it may have provisions for removal from its installation without the use of a tool. This type of cord set will be subject to limited environmental conditions when intended for indoor use only, and will be subject to limited abuses due to the intended installation. See 6.1.1

5.11 DEGREE OF PROTECTION – The extent of protection provided by an enclosure against access to parts which result in a risk of injury, ingress to foreign solid objects, and/or ingress of water as verified by standardized test methods.

5.12 DIRECT PLUG-IN EQUIPMENT – Devices that are provided with the means to connect to the wall outlet built into the product. No power cord is provided.

5.13 ELECTRIC VEHICLE (EV) – An over-the-road automotive type vehicle for highway use, such as a passenger automobile, bus, truck, van, or similar vehicle, which receives primary or supplementary power from an electric motor that draws current from a rechargeable storage battery. This term is used to cover electric vehicles and plug-in hybrid electric vehicles.

5.14 ELECTRIC VEHICLE (EV) CABLE – A cable intended to connect the electric vehicle charging equipment to the electric vehicle.

5.15 ELECTRIC VEHICLE PLUG – A device intended to receive power when inserted into an electric vehicle receptacle, which establishes connection between conductors of the attached EV cable and the conductors connected to the EV receptacle. See Annex A, Ref. No. 5.

UL COPYRIGHTED MATERIAL –
NOT AUTHORIZED FOR FURTHER REPRODUCTION OR
DISTRIBUTION WITHOUT PERMISSION FROM UL

Documents
Document Sharing Hub

Copyright UL
Provided by IHS under license with UL
No reproduction or networking permitted without license from IHS
Full document details: UL 2594 2013

Licensee=North Carolina State Univ/5618801100
Not for Resale, 07/06/2013 22:41:15 MDT

5.16 ELECTRIC VEHICLE RECEPTACLE – A device that is intended to provide power to an inserted EV plug, and that is usually installed as a fixed outlet on electric vehicle supply equipment. See Annex A, Ref. No. 5.

5.17 ELECTRIC VEHICLE SUPPLY EQUIPMENT – A system of components that provide an ac output that is supplied to the vehicle for the purpose of providing input power to an on-board charger.

5.18 ENCLOSURE – That portion of a device that reduces the accessibility of a part that involves a risk of fire, electric shock, injury to persons, or hazardous energy levels, or reduces the risk of propagation of flame, sparks, and molten metal initiated by an electrical disturbance occurring within.

5.19 ENERGIZED PART – A part at some potential with respect to another part or earth.

5.20 EXPOSED – Visible but not necessarily able to be contacted by an accessibility probe.

5.21 GROUND – A conducting connection, whether intentional or accidental, between an electrical circuit or equipment and the earth or to some conducting body that serves in place of the earth.

Note: See Figure 11 for an illustration of the terms "grounding" and "bonding" with corresponding terms for Canada and Mexico.

5.22 GROUNDING MONITOR/INTERRUPTER – A device that monitors equipment grounding continuity in a charging system, and either prevents the circuitry from becoming energized under conditions where the grounding is not available or interrupts the circuit under conditions where the grounding is lost during operation.

5.23 INSULATION CLASSES – The following insulation classes are used to describe insulation between different circuits:

a) Basic Insulation – The insulation required for the proper functioning of a device, and for basic protection against the risk of the risk of electric shock.

b) Supplementary Insulation – An independent insulation provided in addition to the basic insulation to protect against the risk of electric shock in the event the basic insulation fails.

c) Double Insulation – A system of two independent insulations, each of which is capable of acting as the sole insulation between live and accessible parts in the event of failure of the other insulation. The insulation system resulting from a combination of basic and supplementary insulation.

d) Reinforced Insulation - A single insulation system with such mechanical and electrical qualities that it, in itself, provides the same degree of protection against the risk of electric shock, as does double insulation. The term "single insulation system" does not require that the insulation must be in one homogeneous piece. The insulation system comprises two or more layers that are not to be tested as supplementary or basic insulation.

5.24 ISOLATION MONITOR/INTERRUPTER – A device that monitors the insulation resistance of an isolated circuit to ground and prevents energization of the circuit or disconnects an energized circuit when the insulation resistance drops below a predetermined value.

UL COPYRIGHTED MATERIAL –
NOT AUTHORIZED FOR FURTHER REPRODUCTION OR
DISTRIBUTION WITHOUT PERMISSION FROM UL

Documents
Document Sharing Hub

Copyright UL
Provided by IHS under license with UL
No reproduction or networking permitted without license from IHS
Full document details: UL 2594 2013

Licensee=North Carolina State Univ/5618801100
Not for Resale, 07/06/2013 22:41:15 MDT

5.25 ISOLATION MONITOR/INTERRUPTER WITH SELF CHECK – A device similar to that described in 5.24 except that it is also equipped with an automatic supervisory circuit that periodically checks the operation of the isolation monitor and does not permit energizing the circuitry, or during operation, disconnects the energizing circuitry connected to the load terminals of the isolated circuit under conditions where the isolation monitor does not function properly.

5.26 KNOCKOUT – A portion of a wall of a sheet metal enclosure so fashioned that it may be removed readily by a hammer, screwdriver, and pliers at the time of installation in order to provide a hole for the attachment auxiliary device or raceway, cable, or fitting.

5.27 LEAKAGE CURRENT – Electric current which flows through a person upon contact between accessible parts of a device and ground or between accessible parts of a device and other accessible parts of the device.

5.28 LIMITED ENERGY CIRCUIT – An ac or dc circuit having a voltage not exceeding 1000 V and the energy limited to 100 volt-amperes by a means provided as part of the design.

5.29 LIVE PART – A conductive part, such as metal, within the device that during intended use has a potential difference with respect to earth ground or any other conductive part.

5.30 LOW-VOLTAGE, LIMITED-ENERGY (LVLE) CIRCUIT – A circuit involving an alternating current voltage of not more than 30 volts, rms (42.4 volts peak) or a direct current voltage of not more than 60 volts and supplied by:

a) An inherently limited Class 2 transformer or power unit or a not inherently limited Class 2 transformer or power unit and a fuse or other circuit protective device that is:

1) Not of the automatic reclosing type;

2) Trip-free from the reclosing mechanism; and

3) Either not readily interchangeable with a device of a different rating or has a marking in accordance with 75.8 is provided; or

b) A combination of an isolated transformer secondary winding and one or more resistors or a regulating network complying with 25.1.11 that complies with all the performance requirements for an inherently limited Class 2 transformer or power source.

5.31 OVERVOLTAGE CATEGORY – A grouping of products based on typical installed location with respect to overvoltage protection and available energy.

5.32 POLLUTION DEGREE – The level of pollution present at the location on or in a product where the clearance and creepage distance measurement is made, and can be controlled by design of the product. For example, enclosures can be used to achieve pollution degree 3, and encapsulation can be used to achieve pollution degree 1.

5.33 POWER OUTLET, EV – A device that is permanently wired and intended to provide a receptacle where there was previously no accessible receptacle. This product may be designated for indoor only or indoor/outdoor use. The output of the device is a suitable receptacle and is intended for use with an EV Cord Set to charge electric vehicles. The vehicle owner would use the EV power outlet by plugging their EV cord set into the receptacle provided as the output of the EV Power Outlet.

UL COPYRIGHTED MATERIAL –
NOT AUTHORIZED FOR FURTHER REPRODUCTION OR
DISTRIBUTION WITHOUT PERMISSION FROM UL

Documents
Document Sharing Hub

Copyright UL
Provided by IHS under license with UL
No reproduction or networking permitted without license from IHS
Full document details: UL 2594 2013

Licensee=North Carolina State Univ/5618801100
Not for Resale, 07/06/2013 22:41:15 MDT

5.34 PRIMARY CIRCUIT – Wiring and components that are conductively connected to the branch circuit.

5.35 PRIMARY SOURCE – The branch circuit to which the ac input of the device is connected.

5.36 SAFETY CIRCUIT – Any circuit that is used to reduce the risk of fire, electric shock, or injury to persons. For example, in some applications, an interlock circuit would be considered a safety circuit.

5.37 THREADED CONDUIT ENTRY – A conduit entry that is threaded so as to secure a rigid conduit without the use of a bushing or locknut.

5.38 TOOL – A screwdriver, coin, key or any other object that is used to operate a screw, latch, or similar fastening means.

5.39 VEHICLE CONNECTOR (EV CONNECTOR) – A connector, which by insertion into a electric vehicle inlet, establishes an electrical connection to the electric vehicle for the purpose of providing power and information exchange, with means for attachment of an EV cable. This device is part of the Vehicle Coupler.

5.40 VEHICLE COUPLER – The means enabling the connection, at will, of an EV cable to the vehicle. It consists of a Vehicle Connector and a Vehicle Inlet.

5.41 VEHICLE INLET – The part incorporated in, or fixed to the vehicle or intended to be fixed to it, which receives power from the vehicle connector. This device is part of the Vehicle Coupler.

CONSTRUCTION

6 General

6.1 EV cord sets

6.1.1 EV cord sets shall consist of an attachment plug, flexible power cord, personnel protection system with enclosure (see 6.1.2), EV cable, and a vehicle connector. For direct plug-in EV cord sets, the flexible power cord is not provided.

6.1.2 An EV cord set shall be provided with one or more enclosures that house all hazardous live parts, and energy hazardous circuits, excluding the flexible power cord or the EV cable. The enclosure shall protect the various parts of the device against mechanical damage from forces external to the EV Cord Set and shall protect the user from contact with internal hazardous parts. The parts of the enclosure that are required to be in place to comply with the requirements for risk of fire, electric shock, and access to hazardous energy shall comply with the applicable enclosure requirements specified in this Standard. See 6.1.3.

6.1.3 EV Cord Sets shall be investigated based on the intended use of the device. Intended use shall be classified as one of the following:

a) Indoor use only, stationary EV cord set;

b) Indoor/outdoor use, stationary EV cord set; or

UL COPYRIGHTED MATERIAL –
NOT AUTHORIZED FOR FURTHER REPRODUCTION OR
DISTRIBUTION WITHOUT PERMISSION FROM UL

Documents
Document Sharing Hub

Copyright UL
Provided by IHS under license with UL
No reproduction or networking permitted without license from IHS
Full document details: UL 2594 2013

Licensee=North Carolina State Univ/5618801100
Not for Resale, 07/06/2013 22:41:15 MDT

c) Indoor/outdoor use, portable EV cord set.

See 45.3 and Annex B for a list of applicable tests for each intended use classification. Construction requirements will specify which classification is required to comply with that specific requirement. Construction requirements with no specification apply to all classification types. All EV cord sets shall be evaluated based on an expected operating ambient of minus 30°C to 40°C (minus 22°F to 104°F).

6.1.4 The frame or chassis of the device shall not be used to carry current during intended operation.

6.1.5 In the United States, EV Power Cords provided with smart grid functionality shall have this smart grid function evaluated in accordance with Annex A, Ref. No. 7. In Canada and Mexico, this does not apply.

6.2 EV charging stations

6.2.1 EV charging stations shall be provided with an EV receptacle or an EV connector on the vehicle side of the device.

6.2.2 EV charging stations shall be provided with enclosures that house all hazardous live parts, and energy hazardous circuits, excluding the flexible power cord and the EV cable. The enclosure shall protect the various parts of the device against mechanical damage from forces external to the EV charging station. The parts of the enclosure that are required to be in place to comply with the requirements for risk of fire, electric shock, and access to hazardous energy shall comply with the applicable enclosure requirements specified in this Standard. See 6.2.3.

6.2.3 EV charging stations shall be investigated based on the intended use of the charging station. Intended use shall be classified as one of the following:

a) Indoor use only, movable EV charging stations;

b) Indoor/outdoor use, movable EV charging stations;

c) Indoor use only, permanent EV charging stations; or

d) Indoor/outdoor use, permanent EV charging stations.

See 45.3 and Annex B for a list of applicable tests for each intended use classification. Construction requirements will specify which classification is required to comply with that specific requirement. Construction requirements with no specification apply to all classification types. All EV charging stations shall be evaluated based on an expected operating ambient of minus 30°C to 40°C (minus 22°F to 104°F).

6.2.4 The frame or chassis of the device shall not be used to carry current during intended operation.

6.2.5 In the United States, metering devices incorporated into EV charging stations shall comply with the applicable requirements in Annex A, Ref. No. 8 or in Annex A, Ref. No. 9. In Canada and Mexico, this does not apply – see 3.1.

UL COPYRIGHTED MATERIAL –
NOT AUTHORIZED FOR FURTHER REPRODUCTION OR
DISTRIBUTION WITHOUT PERMISSION FROM UL

Documents
Document Sharing Hub

Copyright UL
Provided by IHS under license with UL
No reproduction or networking permitted without license from IHS
Full document details: UL 2594 2013

Licensee=North Carolina State Univ/5618801100
Not for Resale, 07/06/2013 22:41:15 MDT

6.2.6 In the United States, EV charging stations provided with smart grid functionality shall have this smart grid function evaluated in accordance with Annex A, Ref. No. 7. In Canada and Mexico, this does not apply – see 3.1.

6.3 EV power outlets

6.3.1 EV power outlets shall have a suitably rated grounding type, non-locking type receptacle in accordance with Annex A, Ref. No. 28.

6.3.2 EV power outlets shall be provided with enclosures that house all hazardous live parts, and all energy hazardous circuits. The enclosure shall protect the various parts of the device against mechanical damage from forces external to the enclosure, and shall protect the user from contact with internal hazardous parts. The parts of the enclosure that are required to be in place to comply with the requirements for risk of fire, electric shock, and access to hazardous energy shall comply with the applicable enclosure requirements specified in this Standard. See 6.3.3.

6.3.3 EV power outlets shall be investigated based on the intended use of the device. Intended use shall be classified as indoor-use only EV power outlets or indoor/outdoor-use EV power outlets. See 45.3 and Annex B for a list of applicable tests for each intended use classification. Construction requirements will specify which classification is required to comply with that specific requirement. Construction requirements with no specification apply to all classification types. All EV power outlets shall be evaluated based on an expected ambient of minus 30°C to 40°C (minus 22°F to 104°F).

6.3.4 The frame or chassis of the device shall not be used to carry current during intended operation.

6.3.5 In the United States, metering devices incorporated into EV power outlets shall comply with the applicable requirements in Annex A, Ref. No. 8 or Annex A, Ref. No. 9. In Canada and Mexico, this does not apply – see 3.1.

6.3.6 In the United States, EV power outlets provided with smart grid functionality shall have this smart grid function evaluated in accordance with Annex A, Ref. No. 7. In Canada and Mexico, this does not apply – see 3.1.

7 Frame and Enclosure

7.1 General

7.1.1 An enclosure shall be formed and assembled so that it has the strength and rigidity required to resist the abuses to which it may be subjected without resulting in a risk of fire or electrical shock due to total or partial collapse with resulting reduction of spacings, loosening or displacement of parts, or other defects.

7.1.2 The enclosure shall prevent molten metal, burning insulation, flaming particles, or similar materials from falling on combustible materials outside the enclosure.

7.1.3 A part, such as a dial, display face, or nameplate, that serves as a functional part of the enclosure shall comply with the enclosure requirements in this Standard.

UL COPYRIGHTED MATERIAL –
NOT AUTHORIZED FOR FURTHER REPRODUCTION OR
DISTRIBUTION WITHOUT PERMISSION FROM UL

Documents
Document Sharing Hub

Copyright UL
Provided by IHS under license with UL
No reproduction or networking permitted without license from IHS
Full document details: UL 2594 2013

Licensee=North Carolina State Univ/5618801100
Not for Resale, 07/06/2013 22:41:15 MDT

7.1.4 A product that is intended for use in a commercial garage and contains a component that produces arcing or sparking, such as a snap switch, a relay, or a receptacle, shall have that component inherently located at least 457 mm (18 inches) above the floor. For products where these components are not inherently located above 457 mm (18 inches), the requirements in 7.1.5 – 7.1.6 apply.

7.1.4.1 Arcing and sparking components that have been evaluated and found to be suitable for use in a Class 1, Division 2 location using one of the following Standards, need not comply with 7.1.4:

a) Annex A, Ref. No. 10, or

b) Annex A, Ref. No. 11.

7.1.5 With reference to 7.1.4, products that are intended to be carried by hand and are capable of being placed on the floor and which would allow arcing and sparking components to be located less than 457 mm (18 inches) from the floor shall be marked in accordance with 75.9.

7.1.6 With reference to 7.1.4, movable products that are intended to be floor supported and contain arcing and sparking components inherently located above 457 mm (18 inches) shall be marked in accordance with 75.10.

7.1.7 All enclosures shall be rated for a specific degree of environmental protection as outlined in 7.7.

7.2 Access covers

7.2.1 An access cover shall be hinged where it gives access to a fuse or other overload protective device located in a hazardous live circuit, the functioning of which requires renewal or resetting by the user, or where it is required for the user to open the cover in connection with intended operation of the device. A means shall be provided to hold the cover positively closed.

7.2.2 A door or cover giving access to a fuse shall be tight fitting.

7.3 Metallic enclosures

7.3.1 General

7.3.1.1 A metallic enclosure shall comply with the requirements for mechanical strength in 7.6.

7.3.1.2 A metallic enclosure constructed of aluminum, steel, stainless steel, or similar metals is considered to comply with flammability requirements without test. Magnesium shall not be used as an enclosure material.

7.3.1.3 A metallic enclosure shall comply with the applicable environmental considerations for the intended use in accordance with 7.7.

UL COPYRIGHTED MATERIAL –
NOT AUTHORIZED FOR FURTHER REPRODUCTION OR
DISTRIBUTION WITHOUT PERMISSION FROM UL

Documents
Document Sharing Hub

Copyright UL
Provided by IHS under license with UL
No reproduction or networking permitted without license from IHS
Full document details: UL 2594 2013

Licensee=North Carolina State Univ/5618801100
Not for Resale, 07/06/2013 22:41:15 MDT

7.3.2 Cast metal enclosures

7.3.2.1 Except as indicated in 7.3.2.1.1, the thickness of cast metal for an enclosure shall be as specified in Table 1.

7.3.2.1.1 Die cast metal and cast metal of a lesser thickness may be employed when upon investigation it is found to have equivalent mechanical strength as the metals described in Table 1 for the intended use.

Table 1
Thickness of cast-metal enclosures

Use, or dimension of area involved	Minimum thickness, mm (inch)			
	Die-cast metal		Cast metal of other than the die-cast type	
Area of 154.8 cm^2 (24 square inches) or less and having no dimension greater than 152 mm (6 inches)	1.6[a]	(1/16)	3.2	(1/8)
Area greater than 154.8 cm^2 (24 square inches) or having any dimension greater than 152 mm (6 inches)	2.4	(3/32)	3.2	(1/8)
At a threaded conduit hole	6.4	(1/4)	6.4	(1/4)
At an unthreaded conduit hole	3.2	(1/8)	3.2	(1/8)

[a] The area limitation for metal 1.6 mm (1/16 inch) thick is obtained by the provision of reinforcing ribs subdividing a larger area.

7.3.3 Sheet metal enclosures

7.3.3.1 Sheet metal enclosures shall comply with the requirements in Annex A, Ref. No. 12, or 7.3.3.2 – 7.3.3.5.

7.3.3.2 With reference to 7.3.3.1, the thickness of a sheet metal enclosure shall not be less than that specified in Tables 2 and 3.

7.3.3.3 Tables 2 and 3 are based on a uniform deflection of the enclosure surface for any given load concentrated at the center of the surface regardless of metal thickness.

7.3.3.4 With reference to Tables 2 and 3, a supporting frame is a structure of angle or channel or a folded rigid section of sheet metal that is rigidly attached to and has the same outside dimensions as the enclosure surface and that has the torsional rigidity to resist the bending moments that are applied via the enclosure surface. A construction has equivalent reinforcement when it produces a structure that is as rigid as one built with a frame of angles or channels.

7.3.3.5 With reference to 7.3.3.4 and Tables 2 and 3, a construction does not have a supporting frame when it is:

a) A single sheet with single formed flanges – formed edges;

b) A single sheet that is corrugated or ribbed;

c) An enclosure formed or fabricated from sheet metal; or

UL COPYRIGHTED MATERIAL –
NOT AUTHORIZED FOR FURTHER REPRODUCTION OR
DISTRIBUTION WITHOUT PERMISSION FROM UL
Documents
Document Sharing Hub

Copyright UL
Provided by IHS under license with UL
No reproduction or networking permitted without license from IHS
Full document details: UL 2594 2013

Licensee=North Carolina State Univ/5618801100
Not for Resale, 07/06/2013 22:41:15 MDT

d) An enclosure surface loosely attached to a frame – for example, by spring clips.

Table 2
Enclosure-mounting holes

Minimum linear dimension of enclosure mm (inches)	Area of largest surface of enclosure, mm^2 (square inches)	Maximum number of holes	Maximum total area of holes, mm^2 (square inches)
178 (7)	20, 600 (32)	4	774 (1.2)
457 (18)	87,000 (135)	6	774 (1.2)
1020 (40)	254,000 (1,000)	6	970 (1.5)
Over 1020 (40)	Over 254,000 (1,000	8	1,290 (2.0)

Table 3
Thickness of aluminum, copper, or brass enclosures

Without supporting frame[a]				With supporting frame or equivalent reinforcing[a]				Minimum thickness mm (inches)
Maximum width[b]		Maximum length[c]		Maximum width[b]		Maximum length		
cm	(inches)	cm	(inches)	cm	(inches)	cm	(inches)	
7.6	(3.0)	Not limited		17.8	(7.0)	Not limited		0.58[d]
8.9	(3.5)	10.2	(4.0)	21.6	(8.5)	24.1	(9.5)	(0.023)
10.2	(4.0)	Not limited		25.4	(10.0)	Not limited		0.74
12.7	(5.0)	15.2	(6.0)	26.7	(10.5)	34.3	(13.5)	(0.029)
15.2	(6.0)	Not limited		35.6	(14.0)	Not limited		0.91
16.5	(6.5)	20.3	(8.0)	38.1	(15.0)	45.7	(18.0)	(0.036)
20.3	(8.0)	Not limited		48.3	(19.0)	Not limited		1.14
24.1	(9.5)	29.2	(11.5)	53.3	(21.0)	63.5	(25.0)	(0.045)
30.5	(12.0)	Not limited		71.1	(28.0)	Not limited		1.47
35.6	(14.0)	40.6	(16.0)	76.2	(30.0)	94.0	(37.0)	(0.058)
45.7	(18.0)	Not limited		106.7	(42.0)	Not limited		1.91
50.8	(20.0)	63.4	(25.0)	114.3	(45.0)	139.7	(55.0)	(0.075)
63.4	(25.0)	Not limited		152.4	(60.0)	Not limited		2.41
73.7	(29.0)	91.4	(36.0)	162.6	(64.0)	198.1	(78.0)	(0.095)
94.0	(37.0)	Not limited		221.0	(87.0)	Not limited		3.10
106.7	(42.0)	134.6	(53.0)	236.2	(93.0)	289.6	(114.0)	(0.122)
132.1	(52.0)	Not limited		312.4	(123.0)	Not limited		3.89
152.4	(60.0)	188.0	(74.0)	330.2	(130.0)	406.4	(160.0)	(0.153)

[a] See 7.3.3.4 and 7.3.3.5.

[b] The width is the smaller dimension of a rectangular sheet metal piece that is part of an enclosure. Adjacent surfaces of an enclosure may have supports in common and be made of a single sheet.

[c] "Not limited" applies only when the edge of the surface is flanged at least 12.7 mm (1/2 inch) or fastened to adjacent surfaces not normally removed in use.

[d] Sheet copper, brass, or aluminum for an enclosure intended for outdoor use shall not be less than 0.74 mm (0.029 inch) thick.

UL COPYRIGHTED MATERIAL –
NOT AUTHORIZED FOR FURTHER REPRODUCTION OR
DISTRIBUTION WITHOUT PERMISSION FROM UL

Documents
Document Sharing Hub

Copyright UL
Provided by IHS under license with UL
No reproduction or networking permitted without license from IHS
Full document details: UL 2594 2013

Licensee=North Carolina State Univ/5618801100
Not for Resale, 07/06/2013 22:41:15 MDT

7.4 Nonmetallic enclosures

7.4.1 General

7.4.1.1 A nonmetallic enclosure shall comply with the requirements for mechanical strength in 7.6.

7.4.1.2 Nonmetallic materials used in the construction of enclosures shall have a flammability rating in accordance with Flammability, 18.

7.4.1.3 A nonmetallic enclosure shall comply with the applicable environmental considerations for the intended use in accordance with 7.7.

7.4.1.4 Enclosures of molded or formed thermoplastic material shall be constructed so that any shrinkage or distortion of the material over time will not allow for the user to be exposed to hazardous live parts. Compliance is determined by the Mold Stress Test, 66.

7.4.1.5 The minimum thickness of a nonmetallic enclosure shall be such as to comply with the requirements of 7.4.1.1 – 7.4.1.4.

7.4.1.6 A polymeric material enclosure having in any single unbroken section, a projected surface area greater than 0.93 m^2 (10 square feet) or a single linear dimension greater than 1.83 m (6 feet) shall have a flame-spread rating of 200 or less when tested in accordance with:

a) Annex A, Ref. No. 13, or

b) Annex A, Ref. No. 14.

7.4.2 Electrical properties

7.4.2.1 A polymeric material used for enclosures of live parts shall comply with Table 4.

7.4.2.2 A polymeric material which encloses insulated live parts where the insulation thickness is greater than 0.071 mm (0.028 inch), need not comply with the HWI requirements listed in Table 4.

7.4.2.3 A polymeric material used in an enclosure that is separated through air by more than 0.8 mm (1/32 inch) from uninsulated live parts and more than 12.7 mm (1/2 inch) from arcing parts need not comply with the requirements in 7.4.2.1.

UL COPYRIGHTED MATERIAL –
NOT AUTHORIZED FOR FURTHER REPRODUCTION OR
DISTRIBUTION WITHOUT PERMISSION FROM UL

Documents
Document Sharing Hub

Copyright UL
Provided by IHS under license with UL
No reproduction or networking permitted without license from IHS
Full document details: UL 2594 2013

Licensee=North Carolina State Univ/5618801100
Not for Resale, 07/06/2013 22:41:15 MDT

Table 4
Comparative tracking index (CTI) hot wire ignition (HWI) and high-current arc resistance to ignition (HAI) ratings of insulating materials

	CTI		HWI[b]		HAI[c,d]	
Flammability classification[a, d]	**Voltage (V)**	**PLC**	**Mean ignition time (sec)**	**PLC**	**Mean no. of arcs**	**PLC**
V-0, VTM-0	175 to 249	3	7 and up to 15	4	15 and up to 30	3
V-1, VTM-1	175 to 249	3	15 and up to 30	3	30 and up to 60	2

[a] Flammability Classification – described in Annex A, Ref. No. 16.
[b] Hot Wire Resistance to Ignition – described in Annex A, Ref. No. 15.
[c] High-Current Arc Resistance to Ignition – described in Annex A, Ref. No. 15.
[d] A material rated 5VA or 5VB which also carries a V-0 rating shall apply the values for a V-0 rating. A material rated 5VA or 5VB with no additional V-0 rating shall apply the values for a V-1 rating.

7.4.3 Thermal properties

7.4.3.1 Except as indicated in 7.4.3.1.1, a polymeric material used for the enclosure of live parts shall have a relative thermal index rating higher than the temperature observed on that polymeric part during the Temperature Test, 49, for the specific application of the insulating material.

7.4.3.1.1 This requirement does not apply to epoxy potting materials.

7.5 Openings in enclosures

7.5.1 General

7.5.1.1 The enclosure of a device shall be designed and constructed to reduce the risk of emission of flame, molten metal, flaming or glowing particles, or flaming drops.

7.5.1.2 Enclosures, regardless of the materials, shall not be provided with ventilation openings unless designated as Type 1 or Type 2 enclosures.

7.5.2 Enclosure top ventilation openings

7.5.2.1 Except as indicated in 7.5.2.1.1, the minor dimension – see 7.5.2.2 – of any ventilation opening in the top of an enclosure directly over an uninsulated live part involving a risk of electric shock shall not exceed 4.8 mm (3/16 inch) unless the configuration is such that the risk of direct vertical entry of a falling object to uninsulated live parts is reduced by means of a trap or restriction. See Figure 1 for examples of top surface ventilation openings that reduce the risk of direct entry.

7.5.2.1.1 The 4.8 mm (3/16 inch) limitation specified in 7.5.2.1 does not apply for ventilation openings located 1.8 m (6 feet) or higher from the floor, when the device is installed in accordance with the manufacturer's instructions. Such ventilation openings shall comply with the accessibility requirements in Protection of Users - Accessibility and User Servicing, 8.

UL COPYRIGHTED MATERIAL –
NOT AUTHORIZED FOR FURTHER REPRODUCTION OR
DISTRIBUTION WITHOUT PERMISSION FROM UL
Documents
Document Sharing Hub

Copyright UL
Provided by IHS under license with UL
No reproduction or networking permitted without license from IHS
Full document details: UL 2594 2013

Licensee=North Carolina State Univ/5618801100
Not for Resale, 07/06/2013 22:41:15 MDT

7.5.2.2 With reference to the requirement in 7.5.2.1, the minor dimension of a ventilation opening is the diameter of the largest cylindrical probe that is capable of being inserted through the opening.

Figure 1
Cross section of top opening designs

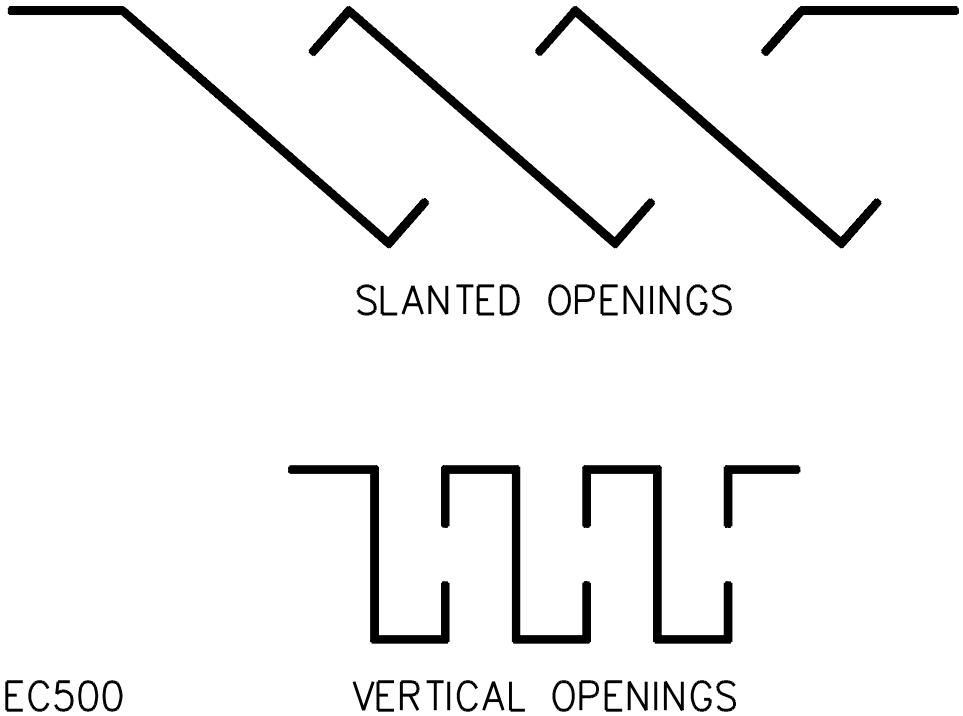

7.5.3 Enclosure side ventilation openings

7.5.3.1 The ventilation openings on the sides of an enclosure shall comply with one of the following:

a) They shall not exceed 4.8 mm (3/16 inch) in any dimension;

b) They shall not exceed 1 mm (0.04 inch) in width regardless of length;

c) They shall be provided with louvers that are shaped to deflect outwards an external vertically falling object – see Figure 2; or

d) They shall be so located that an object, upon entering the enclosure, is unlikely to fall on uninsulated live parts involving a risk of fire or electric shock – see 7.5.3.2.

7.5.3.2 Where a portion of the side of the enclosure falls within the area as traced out by the 5 degree angle in Figure 3, the limitations for bottom ventilation openings shall apply to that portion of the side.

UL COPYRIGHTED MATERIAL –
NOT AUTHORIZED FOR FURTHER REPRODUCTION OR
DISTRIBUTION WITHOUT PERMISSION FROM UL
Documents
Document Sharing Hub

Copyright UL
Provided by IHS under license with UL
No reproduction or networking permitted without license from IHS
Full document details: UL 2594 2013
Licensee=North Carolina State Univ/5618801100
Not for Resale, 07/06/2013 22:41:15 MDT

Figure 2
Examples of louver designs

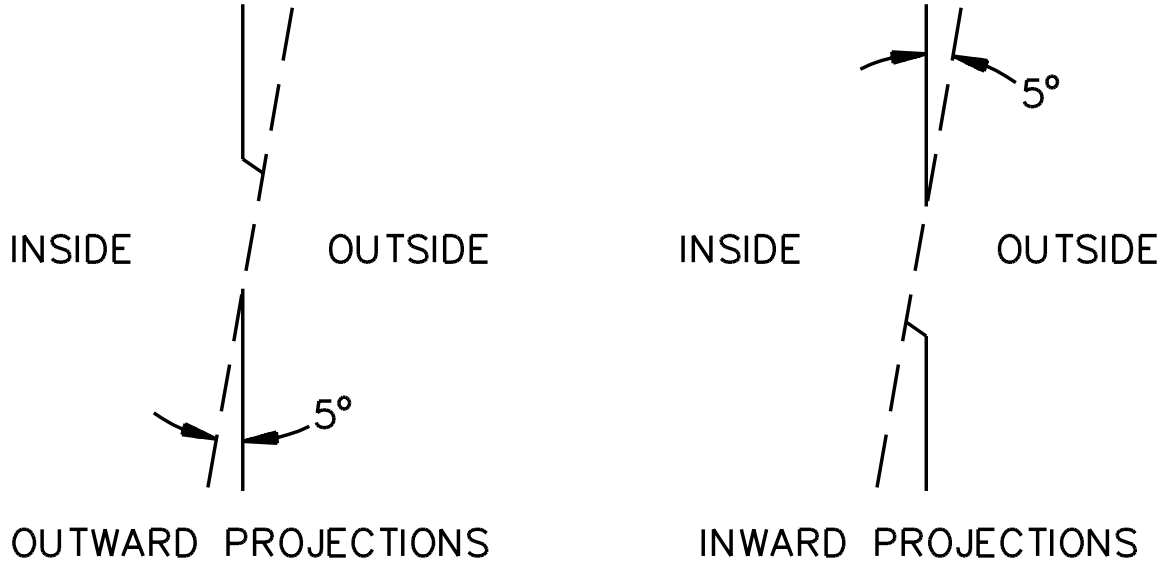

EC513

UL COPYRIGHTED MATERIAL –
NOT AUTHORIZED FOR FURTHER REPRODUCTION OR
DISTRIBUTION WITHOUT PERMISSION FROM UL

Documents
Document Sharing Hub

Copyright UL
Provided by IHS under license with UL
No reproduction or networking permitted without license from IHS
Full document details: UL 2594 2013

Licensee=North Carolina State Univ/5618801100
Not for Resale, 07/06/2013 22:41:15 MDT

Figure 3
Cross section of side opening designs

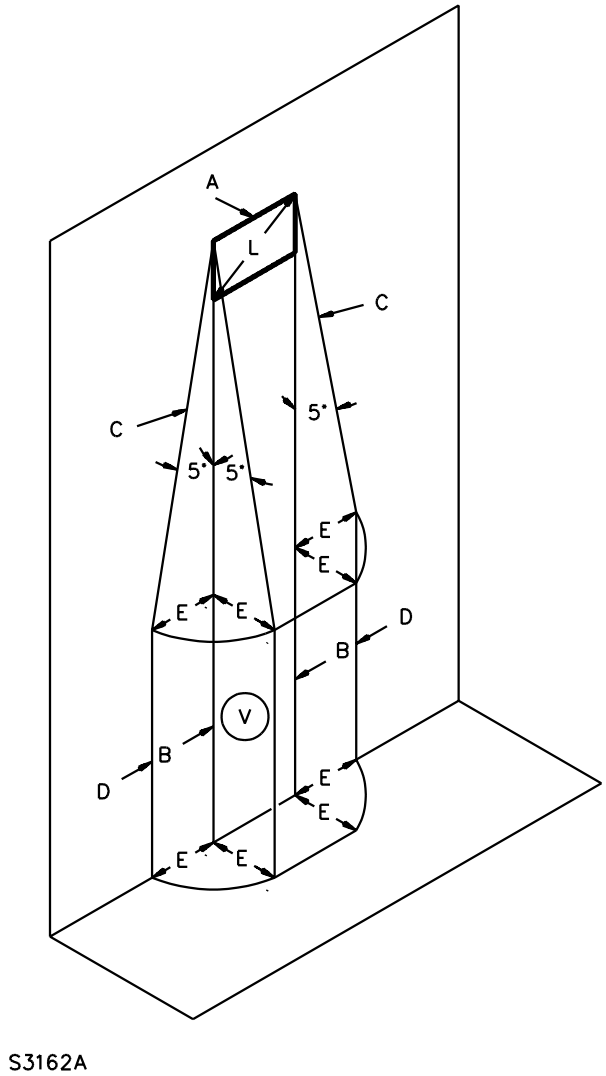

A – Enclosure side opening

B – Vertical projection of the outer edges of the side opening

C – Inclined lines that project as a 5 degree angle from the edges of the side opening to points located E distance from B

D – Line which is projected straight downward in the same plane as the enclosure side wall

E – Projection of the opening (not to be greater than L)

L – Maximum dimension of the enclosure side opening

V – Volume in which bare parts at hazardous voltage are not located

UL COPYRIGHTED MATERIAL –
NOT AUTHORIZED FOR FURTHER REPRODUCTION OR
DISTRIBUTION WITHOUT PERMISSION FROM UL

Documents
Document Sharing Hub

Copyright UL
Provided by IHS under license with UL
No reproduction or networking permitted without license from IHS
Full document details: UL 2594 2013

Licensee=North Carolina State Univ/5618801100
Not for Resale, 07/06/2013 22:41:15 MDT

7.5.4 Enclosure bottom ventilation openings

7.5.4.1 Except as indicated in 7.5.4.1.1 – 7.5.4.1.3, the requirement in 7.5.1.1 requires a complete noncombustible bottom or a construction employing individual noncombustible barriers under components, groups of components, or assemblies, as specified in Figure 4.

7.5.4.1.1 Ventilation openings in the bottom panel are allowed when noncombustible baffle plates are provided to reduce the risk of materials from falling directly from the interior of the device onto the supporting surface or any other location under the device. An example of such a baffle is illustrated in Figure 5.

7.5.4.1.2 Ventilation openings in the bottom of an enclosure are also allowed when the openings incorporate a perforated metal plate as described in Table 5, or a galvanized or stainless steel screen having a 2 by 2 mesh per millimeter (14 by 14 mesh per inch) constructed of wire with a diameter of 0.4 mm (0.018 inch) minimum.

7.5.4.1.3 Products intended to be mounted on a noncombustible surface, where the noncombustible surface completes the enclosure, are not required to comply with 7.5.4.1 when marked in accordance with 75.19.

UL COPYRIGHTED MATERIAL –
NOT AUTHORIZED FOR FURTHER REPRODUCTION OR
DISTRIBUTION WITHOUT PERMISSION FROM UL

Documents
Document Sharing Hub

Copyright UL
Provided by IHS under license with UL
No reproduction or networking permitted without license from IHS
Full document details: UL 2594 2013

Licensee=North Carolina State Univ/5618801100
Not for Resale, 07/06/2013 22:41:15 MDT

Figure 4
Enclosure bottom

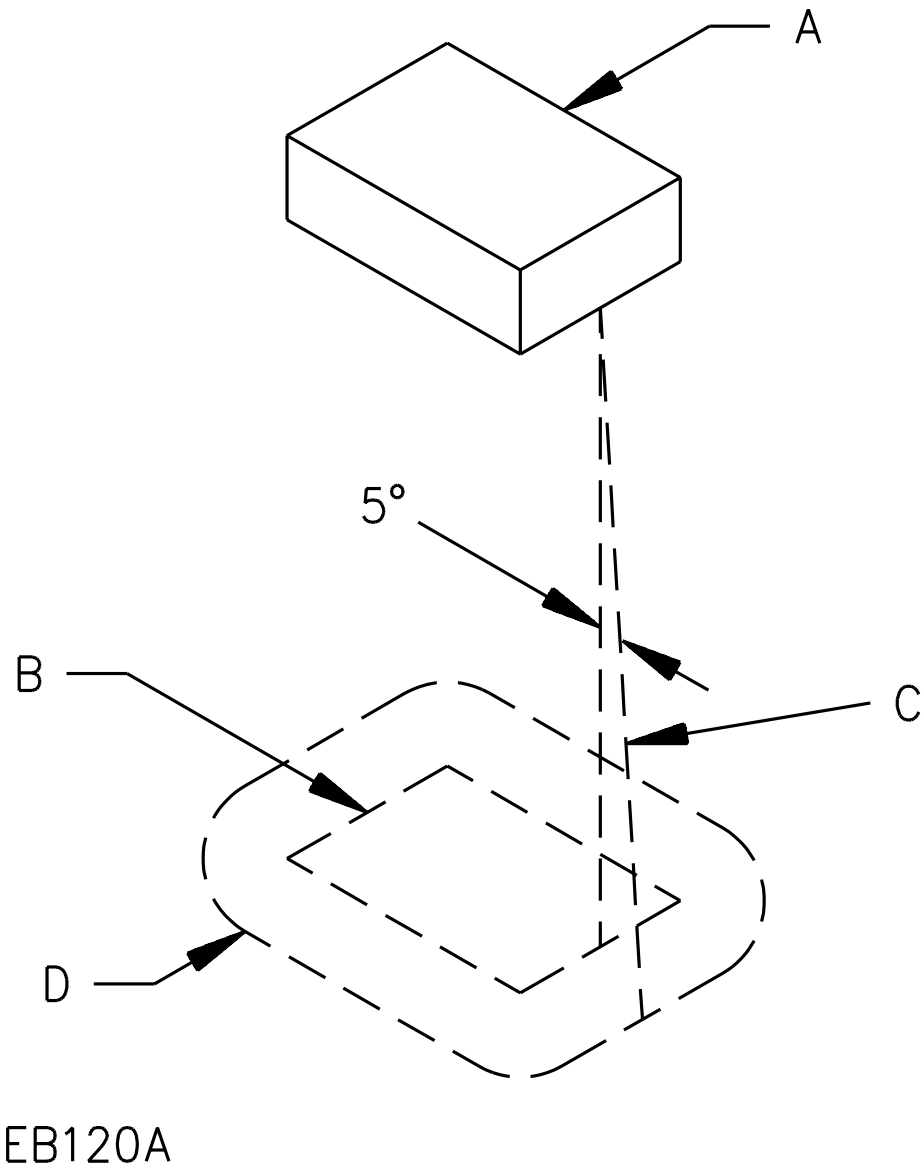

A – Region to be shielded by barrier. This consists of the entire component when it is not otherwise shielded, and of the unshielded portion of a component which is partially shielded by the component enclosure or equivalent.

B – Projection of outline of component on horizontal plane.

C – Inclined line which traces out minimum area of barrier. When moving, the line is always: (1) tangent to the component, (2) five degrees from the vertical, and (3) so oriented that the area traced out on a horizontal plane is maximum.

D – Location (horizontal) and minimum area for barrier. The area is that included inside the line of intersection traced out by the inclined line C and the horizontal plane of the barrier.

UL COPYRIGHTED MATERIAL –
NOT AUTHORIZED FOR FURTHER REPRODUCTION OR
DISTRIBUTION WITHOUT PERMISSION FROM UL

Documents
Document Sharing Hub

Copyright UL
Provided by IHS under license with UL
No reproduction or networking permitted without license from IHS
Full document details: UL 2594 2013

Licensee=North Carolina State Univ/5618801100
Not for Resale, 07/06/2013 22:41:15 MDT

Figure 5
Example of a bottom-enclosure baffle

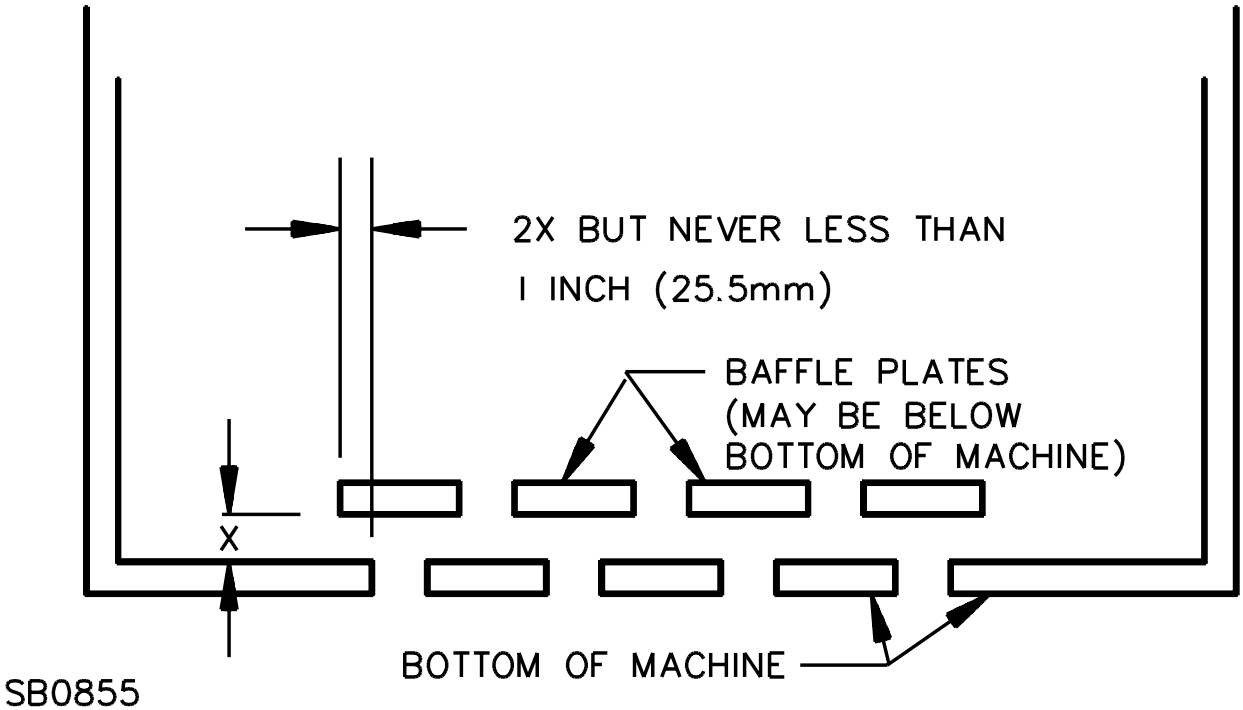

Table 5
Perforated metal plates for enclosure bottom

Minimum thickness, mm	(inch)	Maximum diameter of holes, mm	(inch)	Minimum spacings of holes center to center, mm	(inch)
0.66	(0.026)	1.14	(0.045)	1.70	(0.067)
				645 mm^2	(233 holes per inch^2)
0.66	(0.026)	1.19	(0.047)	2.36	(0.093)
0.76	(0.030)	1.14	(0.045)	1.70	(0.067)
0.76	0.030)	1.19	(0.047)	2.36	(0.093)
0.81	(0.032)	1.91	(0.075)	3.18	(0.125)
				645 mm^2	(72 holes per inch^2)
0.89	(0.035)	1.90	(0.075)	3.18	(0.125)
0.91	(0.036)	1.60	(0.063)	2.77	(0.109)
0.91	(0.036)	1.98	(0.078)	3.18	(0.125)
0.99	(0.039)	1.60	(0.063)	2.77	(0.109)
0.99	(0.039)	2.00	(0.079)	3.00	(0.118)

UL COPYRIGHTED MATERIAL –
NOT AUTHORIZED FOR FURTHER REPRODUCTION OR
DISTRIBUTION WITHOUT PERMISSION FROM UL
Documents
Document Sharing Hub

Copyright UL
Provided by IHS under license with UL
No reproduction or networking permitted without license from IHS
Full document details: UL 2594 2013

Licensee=North Carolina State Univ/5618801100
Not for Resale, 07/06/2013 22:41:15 MDT

7.5.5 Openings for wiring

7.5.5.1 The requirements described in 7.5.5.2 – 7.5.5.11 apply to permanent units.

7.5.5.2 Enclosures shall be designed for use with appropriate conductor entry provisions to maintain the specified environmental capability of the particular enclosure type being evaluated.

7.5.5.3 When threads for the connection of conduit are tapped all the way through a hole in an enclosure wall or when an equivalent construction is employed, there shall not be less than three nor more than five threads in the metal, and the construction of the enclosure shall be such that a conduit bushing is capable of being attached as intended. When threads for the connection of conduit are not tapped all the way through a hole in an enclosure wall, conduit hub, or similar material there shall not be less than 3-1/2 threads in the metal and there shall be a smooth, rounded inlet hole for the conductors equivalent to that provided by a standard conduit bushing with an internal diameter the same as that of the corresponding trade size of rigid conduit.

7.5.5.4 Clamps and fasteners for the attachment of conduit, electrical metallic tubing, armored cable, nonmetallic flexible tubing, nonmetallic-sheathed cable, service cable, and similar material that are supplied as a part of an enclosure shall comply with Annex A, Ref. No. 17 and No. 18.

7.5.5.5 A knockout in a sheet-metal enclosure shall be secured and shall be removable without undue deformation of the enclosure.

7.5.5.6 A knockout shall be provided with a flat surrounding surface so that the conduit bushing is capable of being seated as intended, and shall be located so that installation of a bushing at any knockout to be used during installation does not result in spacing between an uninsulated live part and the bushing to be less than that specified in Spacings, 22.

7.5.5.7 Knockouts shall not be provided in a Type 12 enclosure.

7.5.5.8 In measuring a spacing between an uninsulated live part and a bushing installed in a knockout as mentioned in 7.5.5.6, it shall be assumed that a bushing having the dimensions specified in Table 6 is in place, in conjunction with a single locknut installed on the outside of the enclosure.

7.5.5.9 For an enclosure not provided with conduit openings or knockouts, spacings not less than the minimum specified in Spacings, 22, shall be provided between uninsulated live parts and a conduit bushing installed at any location that shall be used during installation. Permanent marking on the enclosure, a template, or a drawing furnished with the device are ways to specify such a location. The specified location of the openings shall be such that damage to internal parts does not result when openings are made.

UL COPYRIGHTED MATERIAL –
NOT AUTHORIZED FOR FURTHER REPRODUCTION OR
DISTRIBUTION WITHOUT PERMISSION FROM UL

Documents
Document Sharing Hub

Copyright UL
Provided by IHS under license with UL
No reproduction or networking permitted without license from IHS
Full document details: UL 2594 2013

Licensee=North Carolina State Univ/5618801100
Not for Resale, 07/06/2013 22:41:15 MDT

Table 6
Knockout or hole sizes and dimensions of bushings

Metric designator (Trade size)	Knockout or hole diameter		Bushing dimensions			
			Overall diameter		Height	
mm (inches)	mm	(inches)	mm	(inches)	mm	(inches)
16 (1/2)	22.2	(7/8)	25.4	(1)	9.5	(3/8)
21 (3/4)	27.8	(1-3/32)	31.4	(1-15/64)	10.7	(27/64)
27 (1)	34.5	(1-23/64)	40.5	(1-19/32)	13.1	(33/64)
35 (1-1/4)	43.7	(1-23/32)	49.2	(1-15/16)	14.3	(9/16)
41 (1-1/2)	50.0	(1-31/32)	56.0	(2-13/64)	15.10	(19/32)
53 (2)	62.7	(2-15/32)	68.7	(2-45/64)	15.9	(5/8)
63 (2-1/2)	76.2	(3)	81.8	(3-7/32)	19.1	(3/4)
78 (3)	92.1	(3-5/8)	98.4	(3-7/8)	20.6	(13/16)

7.5.5.10 With respect to the requirement in 7.5.5.9, means shall be provided so that an opening for conduit is capable of being made without subjecting internal parts to contamination resulting from the presence of metallic particles. Compliance with this requirement is possible by the use of a removable, bolted plate.

7.5.5.11 A polymeric- or metal-closure plug for an unused conduit opening shall comply with the requirements in Annex A, Ref. No. 17, and shall maintain the specified environmental capability of the enclosure in accordance with 7.5.5.2.

7.5.6 Drainage openings

7.5.6.1 Type 2 and 3R enclosures shall have provisions for drainage. Drainage openings shall not be less than 3.2 mm in diameter (1/8 inch in diameter) or more than 6.4 mm in diameter (1/4 inch in diameter), unless baffled or provided with a drainage fitting.

7.5.6.2 For Type 2 and 3R enclosures that also meet the requirements of other enclosure types, the drainage openings shall be closed by a removable plug, and instructions shall be provided in accordance with 79.4.

7.5.6.3 Type 2 and 3R enclosures that also meet the requirements of other enclosure types need not have drainage holes if the enclosure is provided with instructions in accordance with 79.5.

UL COPYRIGHTED MATERIAL –
NOT AUTHORIZED FOR FURTHER REPRODUCTION OR
DISTRIBUTION WITHOUT PERMISSION FROM UL

Documents
Document Sharing Hub

Copyright UL
Provided by IHS under license with UL
No reproduction or networking permitted without license from IHS
Full document details: UL 2594 2013

Licensee=North Carolina State Univ/5618801100
Not for Resale, 07/06/2013 22:41:15 MDT

7.5.7 Openings for mounting

7.5.7.1 Any openings provided for mounting shall be external to the enclosure cavity or shall comply with 7.5.7.2 – 7.5.7.4.

7.5.7.2 In accordance with 7.5.7.1, for enclosure types 3, 3S, 4, 4X, 6, 6P, 12, 12K, and 13, the mounting means may pass through the enclosure wall into the enclosure cavity if it attaches to an intermediate bracket and is shown to comply with the Additional Environmental Tests, 67. The bracket shall then rely on separate mounting hardware to attach it to the building structure. The mounting means shall not have the same mounting hardware pass through the device cavity and attach directly to the building structure.

7.5.7.3 For enclosure types 1, 2, 3R, and 5, mounting means may be provided internal to the equipment cavity if the mounting openings comply with Table 7.

7.5.7.4 If mounting openings other than as noted in Table 7 are provided for Type 1, 2, 3R, or 5 enclosures, the installation instructions provided with the device shall indicate how to maintain the environmental integrity of the enclosure when mounted. See 78.4.

Table 7
Enclosure-mounting holes

Minimum linear dimension of enclosure mm (inches)	Area of largest surface of enclosure, mm^2 (square inches)	Maximum number of holes	Maximum total area of holes, mm^2 (square inches)
178 (7)	20, 600 (32)	4	774 (1.2)
457 (18)	87,000 (135)	6	774 (1.2)
1020 (40)	254,000 (1,000)	6	970 (1.5)
Over 1020 (40)	Over 254,000 (1,000	8	1,290 (2.0)

7.5.8 Glass covered openings

7.5.8.1 Glass covering an opening shall be secured in place so that it is not readily displaced in service, and shall provide mechanical protection for the enclosed parts. Glass for an opening not more than 102 mm (4 inches) in any dimension shall not be less than 1.6 mm (1/16 inch) thick, and glass for an opening not more than 929 cm^2 (144 square inches) in area and having no dimension greater than 305 mm (12 inches) shall not be less than 3.2 mm (1/8 inch) thick. Glass used to cover an area larger than specified above shall not be less than 3.2 mm (1/8 inch) thick and shall:

a) Be of a nonshattering or tempered type that, when broken, complies with Annex A, Ref. No. 19; or

b) Be subjected to the test described in 61.

UL COPYRIGHTED MATERIAL –
NOT AUTHORIZED FOR FURTHER REPRODUCTION OR
DISTRIBUTION WITHOUT PERMISSION FROM UL

Documents
Document Sharing Hub

Copyright UL
Provided by IHS under license with UL
No reproduction or networking permitted without license from IHS
Full document details: UL 2594 2013

Licensee=North Carolina State Univ/5618801100
Not for Resale, 07/06/2013 22:41:15 MDT

7.6 Mechanical strength of enclosures

7.6.1 An enclosure, whether metallic or nonmetallic, shall comply with the applicable strength of enclosure tests, including the Impact Test, 57, Vehicle Drive Over Test, 58, and Drop Test, 59. See 39.

7.7 Environmental considerations

7.7.1 All enclosures shall be rated for one of the enclosure types in Annex A, Ref. No. 20. The enclosure rating shall be appropriate for the intended conditions of use.

7.7.2 All enclosures shall comply with the applicable test requirements for the applicable enclosure type in accordance with Annex A, Ref. No. 20. In addition, the requirements in 7.7.3 – 7.7.5 shall apply to nonmetallic enclosures or metallic enclosures with coatings that require test.

7.7.3 All nonmetallic enclosures, or metallic enclosures with coatings that require test, that are intended for outdoor use shall comply with the UV Exposure Test in Annex A, Ref. No. 21.

7.7.4 For portable EV cord sets, all nonmetallic enclosures, or metallic enclosures with coatings that require test, shall be subjected to the Chemical Exposure Test, 67.4.

7.7.5 All nonmetallic enclosures, or metallic enclosures with coatings that require test, that are intended for use outdoors, shall be subjected to the Water Exposure Test, 67.2.

7.7.6 A gasket that is provided on an enclosure to meet the environmental construction and performance requirements for that enclosure type shall comply with the Gasket tests in Annex A, Ref. No. 20.

8 Protection of Users – Accessibility and User Servicing

8.1 General

8.1.1 The requirements in this section apply to parts that are accessible to the user. For protection of service personnel requirements, refer to Protection of Service Personnel, 32.

8.2 Accessibility

8.2.1 To reduce the risk of unintentional contact that results in electric shock from an uninsulated live part or film-coated wire, an opening in an enclosure shall comply with either:

a) For an opening that has a minor dimension less than 25.4 mm (1 inch), such a part or wire shall not be contacted by the probe illustrated in Figure 6, or

b) For an opening that has a minor dimension of 25.4 mm (1 inch) or more, such a part or wire shall be spaced from the opening as specified in Table 8.

UL COPYRIGHTED MATERIAL –
NOT AUTHORIZED FOR FURTHER REPRODUCTION OR
DISTRIBUTION WITHOUT PERMISSION FROM UL

Documents
Document Sharing Hub

Copyright UL
Provided by IHS under license with UL
No reproduction or networking permitted without license from IHS
Full document details: UL 2594 2013

Licensee=North Carolina State Univ/5618801100
Not for Resale, 07/06/2013 22:41:15 MDT

Table 8
Minimum required distance from an opening to a part that involves a risk of electric shock

Minor dimension of opening[a,b]		Minimum distance from opening to part[b]	
mm	(inches)	mm	(inches)
25.4	(1)	165.0	(6-1/2)
31.8	(1-1/4)	190.0	(7-1/2)
38.1	(1-1/2)	318.0	(12-1/2)
47.6	(1-7/8)	394.0	(15-1/2)
54.0	(2-1/8)	444.0	(17-1/2)
c		762.0	(30)

[a] See 8.2.4.

[b] Between 19.1 and 54 mm (3/4 and 2-1/8 inches), interpolation is to be used to determine a value between values specified in the table.

[c] More than 54 mm (2-1/8 inches), and not more than 152.0 mm (6 inches).

UL COPYRIGHTED MATERIAL –
NOT AUTHORIZED FOR FURTHER REPRODUCTION OR
DISTRIBUTION WITHOUT PERMISSION FROM UL

Documents
Document Sharing Hub

Copyright UL
Provided by IHS under license with UL
No reproduction or networking permitted without license from IHS
Full document details: UL 2594 2013

Licensee=North Carolina State Univ/5618801100
Not for Resale, 07/06/2013 22:41:15 MDT

Figure 6
Articulate probe

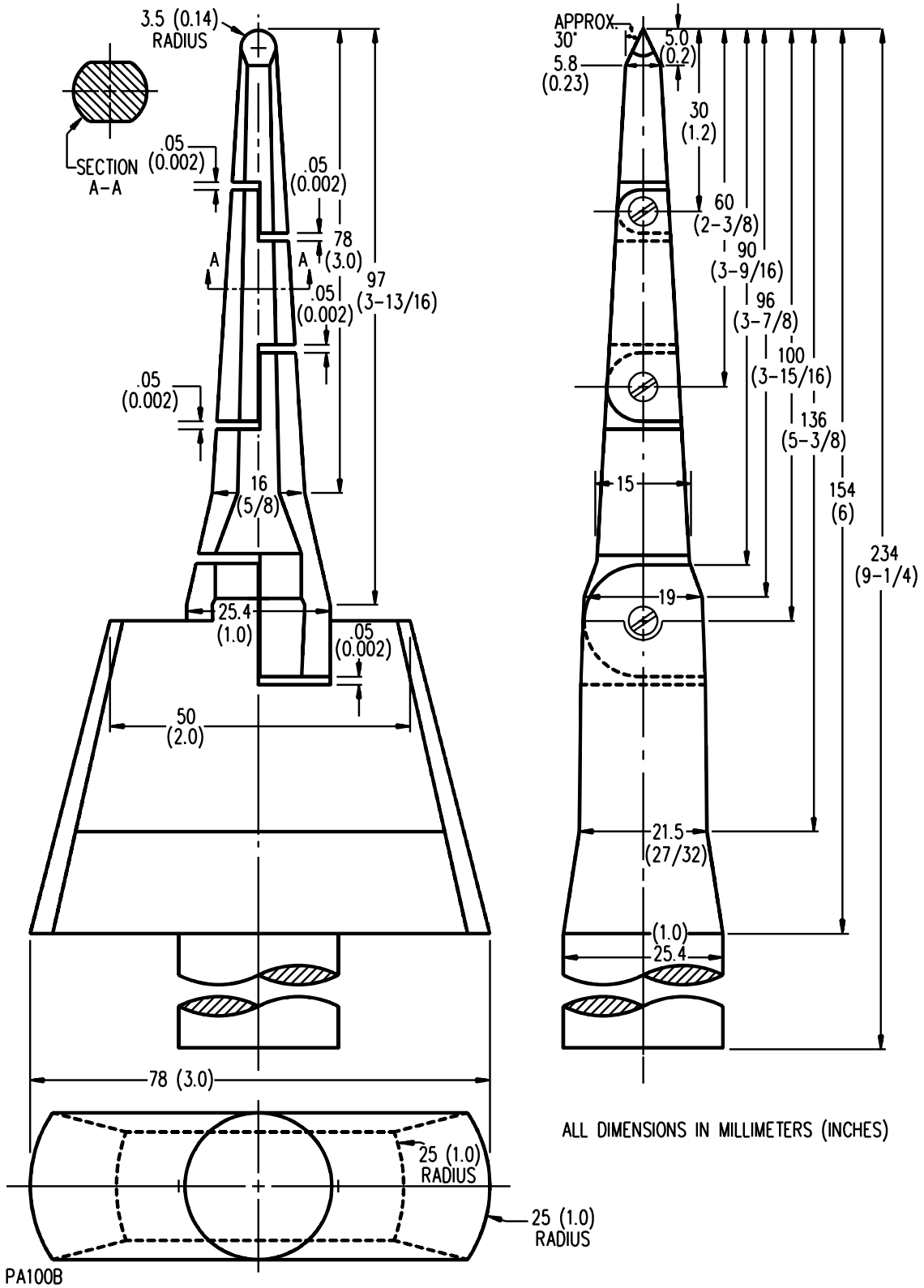

UL COPYRIGHTED MATERIAL –
NOT AUTHORIZED FOR FURTHER REPRODUCTION OR
DISTRIBUTION WITHOUT PERMISSION FROM UL

Documents
Document Sharing Hub

Copyright UL
Provided by IHS under license with UL
No reproduction or networking permitted without license from IHS
Full document details: UL 2594 2013

Licensee=North Carolina State Univ/5618801100
Not for Resale, 07/06/2013 22:41:15 MDT

8.2.2 The probe specified in 8.2.1 and illustrated in Figure 6 shall be applied to any accessible depth of the opening and shall be rotated or angled before, during, and after insertion through the opening to any position that is required to examine the enclosure. The probe illustrated in Figure 6 shall be applied in any possible configuration; and, where required, the configuration shall be changed after insertion through the opening.

8.2.3 The probe mentioned in 8.2.2 shall be used as a measuring instrument to judge the accessibility provided by an opening, and not as an instrument to judge the strength of a material; it shall be applied with a maximum force of 4.4 N (1 pound).

8.2.4 With reference to the requirement in 8.2.1, the minor dimension of an opening is the diameter of the largest cylindrical probe that is capable of being inserted through the opening.

8.2.5 During the examination of a unit to determine whether it complies with the requirement in 8.2.1, a part of the enclosure that is capable of being opened or removed by the user without using a tool shall be opened or removed. A fastener, such as a slotted-head thumb screw, that is turned by hand, does not require the use of a tool.

8.3 User servicing

8.3.1 Service functions that are intended to be carried out by the user, in accordance with the User Maintenance Instructions, 80, shall comply with the requirements in 8.3.2 and 8.3.3.

8.3.2 The user shall not have access to any circuits or uninsulated parts that exceed the limits for an LVLE circuit. If the user is intended to access circuits or parts of the device above these limits, an interlock system shall be provided that will completely remove the hazard prior to the user accessing the area.

8.3.3 Any user servicing that is intended to be performed shall not require the use of a tool to access the area where the servicing is to be performed, unless the tool is specified and that tool cannot be used to access any other area of the device.

9 Protection Against Electric Shock

9.1 General

9.1.1 The user shall be protected against the risk of electric shock. All accessible circuits shall have a potential to earth not exceeding 42.4 V peak or 60 V dc.

9.1.2 In addition to the requirement in 9.1.1, the requirements in 9.2 and 9.3 also apply.

UL COPYRIGHTED MATERIAL –
NOT AUTHORIZED FOR FURTHER REPRODUCTION OR
DISTRIBUTION WITHOUT PERMISSION FROM UL

Documents
Document Sharing Hub

Copyright UL
Provided by IHS under license with UL
No reproduction or networking permitted without license from IHS
Full document details: UL 2594 2013

Licensee=North Carolina State Univ/5618801100
Not for Resale, 07/06/2013 22:41:15 MDT

9.2 Personnel protection systems

9.2.1 Electric vehicle supply equipment, with the exclusion of EV Power Outlets, shall be provided with a personnel protection system. The personnel protection system shall comply with the requirements in Annex A, Ref. No. 22 and Annex A, Ref. No. 23.

9.2.2 The personnel protection system shall be protected by enclosing the components in an enclosure in accordance with Frame and Enclosure, 7.

9.2.3 The interrupting device provided as part of the personnel protection system is required to be located at the attachment plug or not more than indicated in (a) and (b) from the attachment plug:

a) For the US:

1) 300 mm (12 inches) for portable EV Cord Sets and movable EV Charging Stations;

2) 1.8 m (6 feet) for stationary EV Cord Sets that are wall or ceiling mounted.

b) For Canada, 1.8 m (6 feet) for all products.

c) For Mexico, 300 mm (12 inches) for all products.

9.3 Stored energy on capacitors

9.3.1 For cord connected products that contain filtering capacitors or other primary capacitors, the stored energy on the capacitors shall not constitute a hazard to the user. When the attachment plug is removed from the receptacle, stored charge on the capacitors can be discharged through the user if the blades of the attachment plug are contacted. The stored charge shall dissipate within one second, in accordance with the Capacitor Discharge Test, 50. If the total capacitance is not greater than 0.1 uF, then this test is not necessary.

10 Corrosion Protection Against Electric Shock

10.1 All enclosures shall be provided with the applicable corrosion protection outlined in Annex A, Ref. No. 20.

11 Mechanical Assembly

11.1 Loosening of parts as a result of handling and intended operation of the device shall not result in a risk of fire, a risk of electric shock, or a risk of injury to persons.

11.2 Screws with lock washers applied as intended, screws tightened by means of a power tool, rivets, and staked and upset screws are considered to comply without further evaluation. See 11.3.

11.3 The construction of staked and upset screws is to consist of an interference fit between the nut and bolt resulting in uneasy turning of the screw. This shall be accomplished by the use of a center punch applied to the end of a bolt after assembly, mismatching of the nut and bolt threads, or the equivalent.

UL COPYRIGHTED MATERIAL –
NOT AUTHORIZED FOR FURTHER REPRODUCTION OR
DISTRIBUTION WITHOUT PERMISSION FROM UL

Documents
Document Sharing Hub

Copyright UL
Provided by IHS under license with UL
No reproduction or networking permitted without license from IHS
Full document details: UL 2594 2013

Licensee=North Carolina State Univ/5618801100
Not for Resale, 07/06/2013 22:41:15 MDT

11.4 Except as indicated in 11.4.1, a rotating part that, when loosened, results in a risk of fire, electric shock, or injury to persons shall be assembled so that the direction of the rotation tends to tighten the means that hold the rotating part in place.

11.4.1 A keyed part, a press fit, a part locked in place with a pin, or equivalent means to hold a rotating part in place is considered to comply with this requirement.

11.5 A switch, fuseholder, attachment plug, or other component that is handled by the operator shall be mounted securely, and shall not turn when handled. In addition, the connection shall comply with the requirements in 11.6.

11.6 The means of securing components mentioned in 11.5 shall include more than friction between surfaces. A lock washer is an example of a means to secure a device having a single hole mounting means.

12 Supply Connections

12.1 Permanently connected devices

12.1.1 General

12.1.1.1 Except as indicated in 12.1.1.1.1, a permanently connected device shall have provision for connection of a wiring system. This provision shall consist of either wiring terminals as specified in 12.1.1.3 – 12.1.2.10 or wiring leads as specified in 12.1.1.3 and 12.1.3.1 – 12.1.3.6 and a means for connection of cable or conduit as specified in 12.2.1.

In Canada, a supply cord may be provided subject to acceptance by the Authority Having Jurisdiction, if the power supply is marked in accordance with 73.18. In Mexico and the United States, this does not apply.

12.1.1.1.1 The requirements described in 12.1.1.3 – 12.1.3.6 do not apply to the means for connection to accessible signal circuits.

12.1.1.2 The requirement in 12.1.1.1 applies to the wiring connection means for alternating current and direct current power circuits of a device. These connections are intended to be made in the field when the device is installed.

12.1.1.3 A wiring terminal or lead shall be used for the connection of a conductor having an ampacity based on Annex A, Ref. No. 70.

UL COPYRIGHTED MATERIAL –
NOT AUTHORIZED FOR FURTHER REPRODUCTION OR
DISTRIBUTION WITHOUT PERMISSION FROM UL

Documents
Document Sharing Hub

Copyright UL
Provided by IHS under license with UL
No reproduction or networking permitted without license from IHS
Full document details: UL 2594 2013

Licensee=North Carolina State Univ/5618801100
Not for Resale, 07/06/2013 22:41:15 MDT

12.1.2 Wiring terminals

12.1.2.1 A wiring terminal shall comply with the requirements in Annex A, Ref. No. 24 for a wire of each metal for which it is marked. See 73.12.

12.1.2.2 Except as indicated in 12.1.2.2.1 – 12.1.2.2.2, a wiring terminal shall be provided with a pressure terminal connector of other than the crimping type and the terminal shall be securely fastened in place – for example, firmly bolted or held by a screw.

12.1.2.2.1 A pressure terminal connector, including a crimping type, may be field installed in accordance with 12.1.2.4.

12.1.2.2.2 A wire binding screw may be employed at a wiring terminal intended for connection of a 10 AWG (5.3 mm^2) or smaller conductor where upturned lugs, a cupped washer, or the equivalent is provided to hold the wire in position.

12.1.2.3 Except as indicated in 12.1.2.3.1, a wiring terminal shall be prevented from turning or shifting in position by a means other than friction between surfaces. This shall be accomplished by two screws or rivets; by square shoulders or mortises; by a dowel pin, lug, or offset; by a connecting strap or clip fitted into an adjacent part; or by an equivalent method.

12.1.2.3.1 A pressure terminal connector of the type that secures the wire by crimping and used in accordance with the requirements in 12.1.2.4 may turn when the least spacing between adjacent terminals and also between terminals and dead metal parts complies with Spacings, 22, for when connectors are oriented in such a position that results in these spacings.

12.1.2.4 As allowed per 12.1.2.2 and 12.1.2.3, a pressure terminal connector is not required to be provided when the conditions in (a) – (e) are complied with:

a) One or more component terminal assemblies shall be available from the device manufacturer or others, and they shall be specified in the instruction manual. See 77.3 (f).

b) The fastening hardware such as a stud, nut, bolt, spring, or flat washer, or similar part is mounted on or separately packaged with the device, or specified in the instruction manual.

c) The installation of the terminal assembly shall not involve the loosening or disassembly of parts other than a cover or other part giving access to the terminal location. The means for securing the terminal connector shall be readily accessible for tightening before and after installation of conductors.

d) Where the pressure terminal connector provided in a terminal assembly requires the use of other than an ordinary tool for securing the conductor, the tool and any required instructions for using the tool shall be included with the device. See 77.3 (h).

e) Installation of the pressure terminal connector in the intended manner shall result in a device complying with the requirements of this Standard.

UL COPYRIGHTED MATERIAL –
NOT AUTHORIZED FOR FURTHER REPRODUCTION OR
DISTRIBUTION WITHOUT PERMISSION FROM UL

Documents
Document Sharing Hub

Copyright UL
Provided by IHS under license with UL
No reproduction or networking permitted without license from IHS
Full document details: UL 2594 2013

Licensee=North Carolina State Univ/5618801100
Not for Resale, 07/06/2013 22:41:15 MDT

12.1.2.5 An insulating base for support of a pressure terminal connector shall be subjected to the Strength of Terminal Insulating Base and Support Test, 60.

12.1.2.6 Except as indicated in 12.1.2.6.1, a wire binding screw at a field wiring terminal shall not be smaller than No. 10 (4.8 mm diameter).

12.1.2.6.1 A No. 8 (4.2 mm diameter) screw being used at a terminal intended only for the connection of a 14 AWG (2.1 mm^2) conductor, or a No. 8 or 6 (4.2 mm or 3.5 mm diameter) screw being used at a terminal intended for connection of a 16 or 18 AWG (1.3 or 0.82 mm^2) control circuit conductor, is allowed.

12.1.2.7 A wire binding screw shall thread into metal.

12.1.2.8 Except as indicated in 12.1.2.8.1, a terminal plate tapped for a wire binding screw shall be of metal not less than 1.27 mm (0.050 inch) thick.

12.1.2.8.1 A terminal plate less than 1.27 mm (0.050 inch) thick may be used in a low voltage, limited energy circuit when the tapped threads withstand the tightening torque specified in Table 9 without stripping.

Table 9
Tightening torque for wire-binding screws

Size of terminal screw, number	Wire sizes to be tested [a]		Tightening torque	
	mm^2	AWG	Newton meters	(Pound-inches)
6	1.31 – 0.824 (ST)	16 – 18 (ST)	1.4	(12)
8	2.08 (S) and 1.31 – 0.824 (ST)	14 (S) and 16 – 18 (ST)	1.8	(16)
10	5.26 – 2.08 (S) and 1.31 – 0.824 (ST)	10 – 14 (S) and 16 – 18 (ST)	2.3	(20)

[a] ST – stranded wire; S – solid wire.

12.1.2.9 There shall be two or more full threads in the metal of a terminal plate. When the metal is extruded at the tapped hole, at least two full threads shall be provided.

12.1.2.10 A terminal for connection of a grounded conductor of an alternating current power circuit shall be identified as described in 73.14.

UL COPYRIGHTED MATERIAL –
NOT AUTHORIZED FOR FURTHER REPRODUCTION OR
DISTRIBUTION WITHOUT PERMISSION FROM UL

Documents
Document Sharing Hub

Copyright UL
Provided by IHS under license with UL
No reproduction or networking permitted without license from IHS
Full document details: UL 2594 2013

Licensee=North Carolina State Univ/5618801100
Not for Resale, 07/06/2013 22:41:15 MDT

12.1.3 Field wiring leads

12.1.3.1 Except as indicated in 12.1.3.1.1, a field-wiring lead shall not be more than two wire sizes smaller than the copper conductor to which it is connected, and shall not be smaller than 18 AWG (0.82 mm^2), for example, a 10 AWG (5.3 mm^2) or larger field-wiring lead is required for connection to a 6 AWG (13.3 mm^2) field-provided conductor. A field-wiring lead shall not be less than 152.4 mm (6 inches) long.

12.1.3.1.1 An 18 AWG (0.82 mm^2) size field wiring lead may be used for connection to a 12 AWG (3.3 mm^2) size branch circuit conductor.

12.1.3.2 A field wiring lead shall consist of general building wire, or other wiring where it has an insulation of:

a) At least 0.8 mm (1/32 inch) thick thermoplastic material;

b) At least 0.4 mm (1/64 inch) thick rubber plus a braid cover for applications of 300 V or less;

c) At least 0.8 mm (1/32 inch) thick rubber plus a braid cover for applications between 301 and 600 volts.

12.1.3.3 A field wiring lead shall be subjected to the test specified in 54.2.4.

12.1.3.4 A field wiring lead provided for connection to an external line voltage circuit shall not be connected to a wire binding screw or pressure terminal connector located in the same compartment as the free end of the wiring lead unless the screw or connector is rendered unusable for field wiring connection or the lead is insulated at the unconnected end, and a marking is provided on the device in accordance with 73.15.

12.1.3.5 The free end of a field wiring terminal that is not used in every installation, such as a tap for a multivoltage transformer, shall be insulated.

12.1.3.6 A field wiring lead for connection of a grounded conductor shall be identified as described in 73.14.

12.1.4 Wiring compartments

12.1.4.1 A wiring compartment on a fixed device shall be located so that wire connections therein are accessible for inspection, without disturbing either factory or field connected wiring, after the device is installed in the intended manner.

12.1.4.2 Wiring compartments, raceways, or similar devices for routing and stowage of conductors connected in the field shall not contain rough, sharp, or moving parts that are capable of damaging conductor insulation.

UL COPYRIGHTED MATERIAL –
NOT AUTHORIZED FOR FURTHER REPRODUCTION OR
DISTRIBUTION WITHOUT PERMISSION FROM UL

Documents
Document Sharing Hub

Copyright UL
Provided by IHS under license with UL
No reproduction or networking permitted without license from IHS
Full document details: UL 2594 2013

Licensee=North Carolina State Univ/5618801100
Not for Resale, 07/06/2013 22:41:15 MDT

12.1.5 Openings for conduit or cable connection

12.1.5.1 For a permanently connected device, openings for wiring and conduit shall comply with the requirements specified in 7.5.5.

12.1.6 Wire bending space

12.1.6.1 In Mexico and the United States, a permanently connected device employing pressure terminal connectors for field connection of circuits described in 12.1.1.2 shall be provided with space within the enclosure as specified in 12.1.6.3 – 12.1.6.7 for the installation of conductors, including grounding conductors that are employed in the installation.

In Canada, wire bending space shall comply with the requirements in Annex A, Ref. No. 25.

12.1.6.2 The conductor size used in judging the wiring space shall be based on the use of a conductor sized in accordance with 12.1.1.3.

12.1.6.3 Wire bending space for field installed conductors shall be provided opposite any pressure wire connector as specified in 12.1.6.4 or 12.1.6.5 and opening or knockout for a wireway or conduit in a gutter as specified in 12.1.6.9.

12.1.6.4 When a conductor is not capable of entering or leaving the enclosure surface opposite its wire connector, the wire bending space shall be as specified in Table 10. A wire is capable of entering or leaving a top, back, bottom, or side surface when there is an opening for conduit or a wireway.

12.1.6.5 Where a conductor is not capable of entering or leaving the enclosure surface opposite its wire connector, the wire bending space shall be as specified in Table 11. The wire bending space is in accordance with Table 11 when a barrier is provided between the connector and the opening, or drawings are provided specifying that the conductors are not to enter or leave the enclosure directly opposite the wire connector. See illustrations A, B, and C of Figure 7.

Table 10
Minimum wire-bending space for conductors through a wall opposite terminals in mm (inches)

Wire size		Wires per terminal (pole)[a]										
AWG or kcmil	mm²	1		2			3			4 or more		
14 –10 AWG	2.1 – 5.3	Not Specified		–			–			–		
8	8.4	38.1	(1-1/2)	–			–			–		
6	13.3	50.8	(2)	–			–			–		
4	21.1	76.2	(3)	–			–			–		
3	26.7	76.2	(3)	–			–			–		
2	33.6	88.9	(3-1/2)	–			–			–		
1	42.4	114	(4-1/2)	–			–			–		
0	53.5	140	(5-1/2)	140			179		(7)	–		
2/0	67.4	152	(6)	152			191		(7-1/2)	–		
3/0	85.0	165	(6-1/2)	165	12.7	(6-1/2)	203		(8)	–		
4/0	107	179	(7)	191	38.1	(7-1/2)	216	12.7	(8-1/2)	–		
250 kcmil	127	216	(8-1/2)	216	50.8	(8-1/2)	229	25.4	(9)	254		(10)
300	152	254	(10)	254	50.8	(10)	279	25.4	(11)	305		(12)
350	177	305	(12)	305	76.2	(12)	330	76.2	(13)	355	50.8	(14)

UL COPYRIGHTED MATERIAL –
NOT AUTHORIZED FOR FURTHER REPRODUCTION OR
DISTRIBUTION WITHOUT PERMISSION FROM UL

Table 10 Continued on Next Page

Documents
Document Sharing Hub

Copyright UL
Provided by IHS under license with UL
No reproduction or networking permitted without license from IHS
Full document details: UL 2594 2013

Licensee=North Carolina State Univ/5618801100
Not for Resale, 07/06/2013 22:41:15 MDT

Table 10 Continued

Wire size		Wires per terminal (pole)[a]										
AWG or kcmil	mm²	1		2			3			4 or more		
400	203	330	(13)	330	76.2	(13)	355	76.2	(14)	381	76.2	(15)
500	253	355	(14)	355	76.2	(14)	381	76.2	(15)	406	76.2	(16)
600	304	381	(15)	406	76.2	(16)	457	76.2	(18)	483	76.2	(19)
700	355	406	(16)	457	76.2	(18)	508	76.2	(20)	559	76.2	(22)
750	380	432	(17)	483	76.2	(19)	559	76.2	(22)	610	76.2	(24)
800	405	457	(18)	508		(20)	559		(22)	610		(24)
900	456	483	(19)	559		(22)	610		(24)	610		(24)
1000	507	508	(20)	–			–			–		
1250	633	559	(22)	–			–			–		
1500	760	610	(24)	–			–			–		
1750	886	610	(24)	–			–			–		
2000	1013	610	(24)	–			–			–		

Note – The table includes only those multiple-conductor combinations that are used. Combinations not specified shall be further evaluated.

[a] Wire bending space is not prohibited from being reduced by the number of inches shown in brackets under the following conditions:

1) Only removable or lay-in wire connectors receiving one wire each are used (more than one removable wire connector per terminal is possible) and

2) The removable wire connectors are removed from their intended location without disturbing structural or electrical parts other than a cover, and are installed with the conductor in place.

12.1.6.6 When a conductor is restricted by a barrier or other means from being bent where it leaves the connector, the distance shall be measured from the end of the barrier. See illustration D of Figure 7.

Table 11
Minimum width of gutter and wire-bending space for conductors through a wall not opposite terminals in mm (inches)

Wire size		Wires per terminal (pole)									
AWG or kcmil	mm²	1		2		3		4		5	
14 – 10 AWG	2.1 – 5.3	Not Specified	–	–		–		–		–	
8 – 6	8.4 – 13.3	38.1	(1-1/2)	–		–		–		–	
4 – 3	21.1 – 26.7	50.8	(2)	–		–		–		–	
2	33.6	63.5	(2-1/2)	–		–		–		–	
1	42.4	76.2	(3)	–		–		–		–	
1/0 – 2/0	53.5 – 7.4	88.9	(3-1/2)	127	(5)	178	(7)	–		–	
3/0 – 4/0	85.0 – 107	102	(4)	152	(6)	203	(8)	–		–	
250 kcmil	127	114	(4-1/2)	152	(6)	203	(8)	254	(10)	–	
300 – 350	152 – 177	127	(5)	203	(8)	254	(10)	305	(12)	–	
400 – 500	203 – 253	152	(6)	203	(8)	254	(10)	305	(12)	356	(14)
600 – 700	304 – 355	203	(8)	254	(10)	305	(12)	356	(14)	406	(16)
750 – 900	380 – 456	203	(8)	305	(12)	356	(14)	406	(16)	457	(18)
1000 – 1250	507 – 633	254	(10)	–		–		–		–	

UL COPYRIGHTED MATERIAL –
NOT AUTHORIZED FOR FURTHER REPRODUCTION OR
DISTRIBUTION WITHOUT PERMISSION FROM UL

Table 11 Continued on Next Page

Documents
Document Sharing Hub

Copyright UL
Provided by IHS under license with UL
No reproduction or networking permitted without license from IHS
Full document details: UL 2594 2013

Licensee=North Carolina State Univ/5618801100
Not for Resale, 07/06/2013 22:41:15 MDT

Table 11 Continued

Wire size		Wires per terminal (pole)				
AWG or kcmil	mm^2	1	2	3	4	5
1500 – 2000	760 – 1010	305 (12)	–	–	–	–
NOTE – The table includes only those multiple-conductor combinations that are frequently used. Combinations not specified shall be further evaluated.						

UL COPYRIGHTED MATERIAL –
NOT AUTHORIZED FOR FURTHER REPRODUCTION OR
DISTRIBUTION WITHOUT PERMISSION FROM UL

Documents
Document Sharing Hub

Copyright UL
Provided by IHS under license with UL
No reproduction or networking permitted without license from IHS
Full document details: UL 2594 2013

Licensee=North Carolina State Univ/5618801100
Not for Resale, 07/06/2013 22:41:15 MDT

Figure 7
Wire bending space

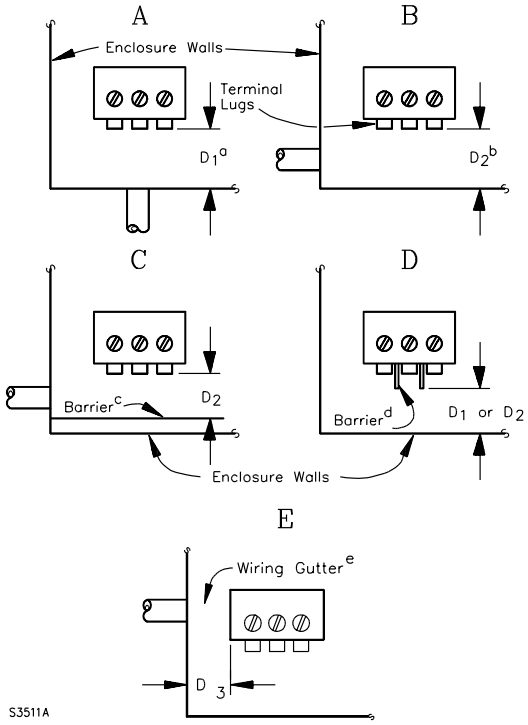

D_1 is the distance between a wire connector or an adjacent barrier and the opposite wall that conductors are intended to pass through.

D_2 is the distance between a wire connector or an adjacent barrier and the opposite wall or barrier that conductors are not intended to pass through.

D_3 is the width of a wiring gutter having a side through which conductors are intended to pass through.

[a] A conduit opening or knockout is provided in the wall opposite the terminal lugs. D_1 shall not be less than the minimum wire bending space specified in Table 10.

[b] A conduit opening or knockout is provided in the wall at a right angle to the wall opposite the terminal lugs. The wall opposite the terminal lugs either is not provided with a knockout or conduit opening or a marking is provided indicating that the conduit opening or knockout is not to be used. D_2 shall not be less than the minimum wire bending space specified in Table 11.

[c] A conduit opening or knockout is provided in the wall at a right angle to the wall opposite the terminal lugs. In addition, a conduit opening or knockout is provided in the wall opposite the terminal lugs, however, a barrier preventing the use of the opening is provided. D_2 shall not be less than the minimum wire bending space specified in Table 11.

[d] When a barrier or other means is provided restricting bending of the conductor, the distance D_1 or D_2, as applicable (see notes for D_1 and D_2 above) shall be measured from the end of the barrier.

[e] A conduit opening or knockout is provided in a wiring gutter. The width of the gutter, D_3, shall not be less than the minimum wire bending space specified in Table 11.

UL COPYRIGHTED MATERIAL –
NOT AUTHORIZED FOR FURTHER REPRODUCTION OR
DISTRIBUTION WITHOUT PERMISSION FROM UL
Documents
Document Sharing Hub

Copyright UL
Provided by IHS under license with UL
No reproduction or networking permitted without license from IHS
Full document details: UL 2594 2013
Licensee=North Carolina State Univ/5618801100
Not for Resale, 07/06/2013 22:41:15 MDT