UL 268

ISBN 0-7629-1189-1

Smoke Detectors for Fire Alarm Signaling Systems

UL COPYRIGHTED MATERIAL –
NOT AUTHORIZED FOR FURTHER REPRODUCTION OR
DISTRIBUTION WITHOUT PERMISSION FROM UL

Documents
Document Sharing Hub

Copyright Underwriters Laboratories Inc.
Provided by IHS under license with UL
No reproduction or networking permitted without license from IHS
Full document details: UL 268 2006

Licensee=University of Texas Revised Sub Account/5620001114
Not for Resale, 07/03/2008 23:02:14 MDT

UL COPYRIGHTED MATERIAL –
NOT AUTHORIZED FOR FURTHER REPRODUCTION OR
DISTRIBUTION WITHOUT PERMISSION FROM UL

Documents
Document Sharing Hub

Copyright Underwriters Laboratories Inc.
Provided by IHS under license with UL
No reproduction or networking permitted without license from IHS
Full document details: UL 268 2006

Licensee=University of Texas Revised Sub Account/5620001114
Not for Resale, 07/03/2008 23:02:14 MDT

Underwriters Laboratories Inc. (UL)
333 Pfingsten Road
Northbrook, IL 60062-2096

UL Standard for Safety for Smoke Detectors for Fire Alarm Signaling Systems, UL 268

Fifth Edition, Dated September 8, 2006

Summary of Topics

This new edition of UL 268 includes the following changes in requirements:

Change in Photocell Loading;

Performance Testing Alternative to Conformal Coating Requirements for Low Voltage, Power Limited Circuits;

Requirements for Same Smoke Generation Method used in Sensitivity Testing as Used in Production Testing;

Use of Two Color LEDs; and

Various Editorial Changes

UL Standards for Safety are developed and maintained in the Standard Generalized Markup Language (SGML). SGML -- an international standard (ISO 8879-1986) -- is a descriptive markup language that describes a document's structure and purpose, rather than its physical appearance on a page. Due to formatting differences resulting from the use of UL's new electronic publishing system, please note that additional pages (on which no requirements have been changed) may be included in revision pages due to relocation of existing text and reformatting of the Standard.

The revisions are substantially in accordance with UL's Bulletin(s) on this subject dated March 11, 2005, November 18, 2005, and May 12, 2006. The bulletin(s) is now obsolete and may be discarded.

As indicated on the title page (page 1), this UL Standard for Safety is an American National Standard. Attention is directed to the note on the title page of this Standard outlining the procedures to be followed to retain the approved text of this ANSI/UL Standard.

The master for this Standard at UL's Northbrook Office is the official document insofar as it relates to a UL service and the compliance of a product with respect to the requirements for that product and service, or if there are questions regarding the accuracy of this Standard.

UL's Standards for Safety are copyrighted by UL. Neither a printed copy of a Standard, nor the distribution diskette for a Standard-on-Diskette and the file for the Standard on the distribution diskette should be altered in any way. All of UL's Standards and all copyrights, ownerships, and rights regarding those Standards shall remain the sole and exclusive property of UL.

All rights reserved. No part of this publication may be reproduced, stored in a retrieval system, or transmitted in any form by any means, electronic, mechanical photocopying, recording, or otherwise without prior permission of UL.

Revisions of UL Standards for Safety are issued from time to time. A UL Standard for Safety is current only if it incorporates the most recently adopted revisions.

UL COPYRIGHTED MATERIAL –
NOT AUTHORIZED FOR FURTHER REPRODUCTION OR
DISTRIBUTION WITHOUT PERMISSION FROM UL

Documents
Document Sharing Hub

Copyright Underwriters Laboratories Inc.
Provided by IHS under license with UL
No reproduction or networking permitted without license from IHS
Full document details: UL 268 2006

Licensee=University of Texas Revised Sub Account/5620001114
Not for Resale, 07/03/2008 23:02:14 MDT

UL provides this Standard ″as is″ without warranty of any kind, either expressed or implied, including but not limited to, the implied warranties of merchantability or fitness for any purpose.

In no event will UL be liable for any special, incidental, consequential, indirect or similar damages, including loss of profits, lost savings, loss of data, or any other damages arising out of the use of or the inability to use this Standard, even if UL or an authorized UL representative has been advised of the possibility of such damage. In no event shall UL's liability for any damage ever exceed the price paid for this Standard, regardless of the form of the claim.

UL will attempt to answer support requests concerning electronic versions of its Standards. However, this support service is offered on a reasonable efforts basis only, and UL may not be able to resolve every support request. UL supports the electronic versions of its Standards only if they are used under the conditions and operating systems for which it is intended. UL's support policies may change from time-to-time without notification.

UL reserves the right to change the format, presentation, file types and formats, delivery methods and formats, and the like of both its printed and electronic Standards without prior notice.

Purchasers of the electronic versions of UL's Standards for Safety agree to defend, indemnify, and hold UL harmless from and against any loss, expense, liability, damage, claim, or judgement (including reasonable attorney's fees) resulting from any error or deviation introduced while purchaser is storing an electronic Standard on the purchaser's computer system.

If a single-user version electronic Standard was purchased, one copy of this Standard may be stored on the hard disk of a single personal computer, or on a single LAN file-server or the permanent storage device of a multiple-user computer in such a manner that this Standard may only be accessed by one user at a time and for which there is no possibility of multiple concurrent access.

If a multiple-user version electronic Standard was purchased, one copy of the Standard may be stored on a single LAN file-server, or on the permanent storage device of a multiple-user computer, or on an Intranet server. The number of concurrent users shall not exceed the number of users authorized.

Electronic Standards are intended for on-line use, such as for viewing the requirements of a Standard, conducting a word search, and the like. Only one copy of the Standard may be printed from each single-user version of an electronic Standard. Only one copy of the Standard may be printed for each authorized user of a multiple-user version of an electronic Standard. Because of differences in the computer/software/printer setup used by UL and those of electronic Standards purchasers, the printed copy obtained by a purchaser may not look exactly like the on-line screen view or the printed Standard.

An employee of an organization purchasing a UL Standard can make a copy of the page or pages being viewed for their own fair and/or practical internal use.

The requirements in this Standard are now in effect, except for those paragraphs, sections, tables, figures, and/or other elements of the Standard having future effective dates as indicated in the note following the affected item. The prior text for requirements that have been revised and that have a future effective date are located after the Standard, and are preceded by a ″SUPERSEDED REQUIREMENTS″ notice.

The UL Foreword is no longer located within the UL Standard. For information concerning the use and application of the requirements contained in this Standard, the current version of the UL Foreword is located on ULStandardsInfoNet at: http://ulstandardsinfonet.ul.com/ulforeword.html

UL COPYRIGHTED MATERIAL –
NOT AUTHORIZED FOR FURTHER REPRODUCTION OR
DISTRIBUTION WITHOUT PERMISSION FROM UL

Documents
Document Sharing Hub

Copyright Underwriters Laboratories Inc.
Provided by IHS under license with UL
No reproduction or networking permitted without license from IHS
Full document details: UL 268 2006

Licensee=University of Texas Revised Sub Account/5620001114
Not for Resale, 07/03/2008 23:02:14 MDT

New product submittals made prior to a specified future effective date will be judged under all of the requirements in this Standard including those requirements with a specified future effective date, unless the applicant specifically requests that the product be judged under the current requirements. However, if the applicant elects this option, it should be noted that compliance with all the requirements in this Standard will be required as a condition of continued Listing or Recognition and Follow-Up Services after the effective date, and understanding of this should be signified in writing.

Copyright © 2006 Underwriters Laboratories Inc.

This Standard consists of pages dated as shown in the following checklist:

Page Date

1-124 . . . . . September 8, 2006
SA1-SA16 . . . . . September 8, 2006
A1-A2 . . . . . September 8, 2006
B1-B2 . . . . . September 8, 2006

UL COPYRIGHTED MATERIAL –
NOT AUTHORIZED FOR FURTHER REPRODUCTION OR
DISTRIBUTION WITHOUT PERMISSION FROM UL

Documents
Document Sharing Hub

Copyright Underwriters Laboratories Inc.
Provided by IHS under license with UL
No reproduction or networking permitted without license from IHS
Full document details: UL 268 2006

Licensee=University of Texas Revised Sub Account/5620001114
Not for Resale, 07/03/2008 23:02:14 MDT

No Text on This Page

UL COPYRIGHTED MATERIAL –
NOT AUTHORIZED FOR FURTHER REPRODUCTION OR
DISTRIBUTION WITHOUT PERMISSION FROM UL

Documents
Document Sharing Hub

Copyright Underwriters Laboratories Inc.
Provided by IHS under license with UL
No reproduction or networking permitted without license from IHS
Full document details: UL 268 2006

Licensee=University of Texas Revised Sub Account/5620001114
Not for Resale, 07/03/2008 23:02:14 MDT

UL 268

Standard for Smoke Detectors for Fire Alarm Signaling Systems

Products covered by this standard were previously tested under the Standards for Combustion Products Type Smoke Detectors for Fire Protective Signaling Systems, UL 167, and Photoelectric Type Smoke Detectors for Fire Protective Signaling Systems, UL 168. The First, Second, Third and Fourth Editions were titled Standard for Smoke Detectors for Fire Protective Signaling Systems.

First Edition – September, 1979
Second Edition – June, 1981
Third Edition – May, 1989
Fourth Edition – December, 1996

Fifth Edition

September 8, 2006

The most recent designation of ANSI/UL 268 as an American National Standard (ANSI) occurred on September 8, 2006.

This ANSI/UL Standard for Safety, which consists of the Fifth Edition with revisions through September 8, 2006, is under continuous maintenance, whereby each revision is ANSI approved upon publication. Comments or proposals for revisions on any part of the Standard may be submitted to UL at any time. Proposals should be submitted via a Proposal Request in UL's On-Line Collaborative Standards Development System (CSDS) at http://csds.ul.com.

An effective date included as a note immediately following certain requirements is one established by Underwriters Laboratories Inc.

Revisions of this Standard will be made by issuing revised or additional pages bearing their date of issue. A UL Standard is current only if it incorporates the most recently adopted revisions, all of which are itemized on the transmittal notice that accompanies the latest set of revised requirements.

ISBN 0-7629-1189-1

COPYRIGHT © 1979, 2006 UNDERWRITERS LABORATORIES INC.

UL COPYRIGHTED MATERIAL –
NOT AUTHORIZED FOR FURTHER REPRODUCTION OR
DISTRIBUTION WITHOUT PERMISSION FROM UL

Documents
Document Sharing Hub

Copyright Underwriters Laboratories Inc.
Provided by IHS under license with UL
No reproduction or networking permitted without license from IHS
Full document details: UL 268 2006

Licensee=University of Texas Revised Sub Account/5620001114
Not for Resale, 07/03/2008 23:02:14 MDT

No Text on This Page

UL COPYRIGHTED MATERIAL –
NOT AUTHORIZED FOR FURTHER REPRODUCTION OR
DISTRIBUTION WITHOUT PERMISSION FROM UL

Documents
Document Sharing Hub

Copyright Underwriters Laboratories Inc.
Provided by IHS under license with UL
No reproduction or networking permitted without license from IHS
Full document details: UL 268 2006

Licensee=University of Texas Revised Sub Account/5620001114
Not for Resale, 07/03/2008 23:02:14 MDT

CONTENTS

INTRODUCTION

1 Scope 8
2 General 9
2.1 Components 9
2.2 Units of measurement 9
2.3 Undated references 10
3 Glossary 10
4 Detector Reliability Prediction 12
5 Installation and Operating Instructions 12

CONSTRUCTION

ASSEMBLY

6 General 13
6.1 Remote accessories 13
6.2 Sensitivity indicating means 13
6.3 Radioactive materials 13
6.4 Insect guards 14
6.5 Supplementary heat detector 14
6.6 Alarm verification feature 14
6.7 Maintenance (cleanability) 14
7 Compatibility Information 15
7.1 General 15
7.2 Method of evaluation 15
7.3 Changes affecting compatibility 16
8 Servicing and Maintenance Protection 16
8.1 General 16
8.2 Sharp edges 16
9 Enclosure 17
9.1 General 17
9.2 Cast metal enclosures 18
9.3 Sheet metal enclosures 18
9.4 Nonmetallic enclosures 19
9.5 Ventilating openings 20
9.6 Covers 20
9.7 Glass panels 21
10 Corrosion Protection 22
11 Field Wiring Connections 22
11.1 General 22
11.2 Field wiring compartment 23
11.3 Field wiring terminals 23
11.4 Field wiring leads 23
11.5 Grounding terminals and leads 24
11.6 Grounded supply terminals and leads 25
11.7 Isolated (nongrounded) detectors 25
12 Internal Wiring 25
12.1 General 25
12.2 Wireways 26

UL COPYRIGHTED MATERIAL –
NOT AUTHORIZED FOR FURTHER REPRODUCTION OR
DISTRIBUTION WITHOUT PERMISSION FROM UL
Documents
Document Sharing Hub

Copyright Underwriters Laboratories Inc.
Provided by IHS under license with UL
No reproduction or networking permitted without license from IHS
Full document details: UL 268 2006

Licensee=University of Texas Revised Sub Account/5620001114
Not for Resale, 07/03/2008 23:02:14 MDT

12.3 Splices 26
12.4 Barriers 27
12.5 Strain relief 27
13 Bonding for Grounding 27

COMPONENTS

14 General 28
14.1 Mounting of components 28
14.2 Operating components 29
14.3 Current-carrying parts 29
15 Bushings 29
16 Electrical Insulating Material 30
17 Lampholders and Lamps 31
18 Photocell Illuminating Lamps 31
19 Motors 32
20 Protective Devices 32
21 Printed Wiring Boards 32
22 Switches 32
23 Transformers and Coils 32
24 Dropping Resistors 33
25 Heat Detector 33
26 Batteries 33
26.1 General 33
26.2 Battery connections 34

SPACINGS

27 General 34

PERFORMANCE

28 General 36
28.1 Test units and data 36
28.2 Test voltages 36
28.3 Test samples and data 36
28.4 Component reliability data 37
28.5 Remote accessories 38
28.6 Detector guards 38
29 Normal Operation Test 38
29.1 General 38
29.2 Standardized alarm signal 39
29.3 Sensitivity shift criteria 39
30 Electrical Supervision Test 40
30.1 General 40
30.2 Component failure 41
30.3 Photocell illuminating lamps 42
30.4 Battery powered units 42
30.5 Chamber monitoring (Required only when the detector employs a chamber monitoring feature) 43
31 Sensitivity Test 43
31.1 General 43
31.2 Combustibles 44

UL COPYRIGHTED MATERIAL –
NOT AUTHORIZED FOR FURTHER REPRODUCTION OR
DISTRIBUTION WITHOUT PERMISSION FROM UL
Documents
Document Sharing Hub

Copyright Underwriters Laboratories Inc.
Provided by IHS under license with UL
No reproduction or networking permitted without license from IHS
Full document details: UL 268 2006

Licensee=University of Texas Revised Sub Account/5620001114
Not for Resale, 07/03/2008 23:02:14 MDT

31.3 Aerosol generation equipment (alternate method) .45
31.4 Test equipment .46
31.5 Test method .53
31.6 Uniformity of operation .55
31.7 Sensitivity test feature .55
31.8 Alarm verification .55
32 Directionality Test .56
33 Velocity-Sensitivity Test .56
34 Smoke Entry (Stack Effect) Test .57
35 Lamp Interchangeability Test (Photoelectric) .58
36 Reduction in Light Output Test .59
37 Stability Test .59
38 Test for Effect of Air Velocity .60
39 Fire Tests .61
39.1 General .61
39.2 Paper fire – Test A .61
39.3 Wood fire – Test B .62
39.4 Flammable liquid fire – Test C .63
39.5 Igniter assembly .63
39.6 Test method .65
40 Smoldering Smoke Test .74
41 Smoldering Smoke Test (Maximum Obscuration Without Alarm) .79
42 Circuit Measurement Test .79
42.1 General .79
42.2 Battery trouble voltage determination .79
43 Overvoltage and Undervoltage Tests .83
43.1 Overvoltage test .83
43.2 Undervoltage test .83
44 Temperature Test .84
45 Vibration Test .88
46 Replacement Test, Head and Covers .88
47 Jarring Test .88
48 Variable Ambient Temperature Tests .89
48.1 Operation in high and low ambients .89
48.2 Effect of shipping and storage .92
49 Humidity Test .92
50 Corrosion Tests .93
51 Transient Tests .93
51.1 General .93
51.2 Internally induced transients .94
51.3 Extraneous transients .94
51.4 Supply line (high-voltage) transients .95
51.5 Supply line (low-voltage circuit) transients .95
52 Static Discharge Test .98
53 Dust Test .98
54 Overload Tests .100
54.1 Detector .100
54.2 Separately energized circuits .100
55 Endurance Test .101
55.1 Detector .101
55.2 Separately energized circuits .101
55.3 Audible signaling appliance .101
56 Fire Test (Heat Detector) .102

UL COPYRIGHTED MATERIAL –
NOT AUTHORIZED FOR FURTHER REPRODUCTION OR
DISTRIBUTION WITHOUT PERMISSION FROM UL
Documents
Document Sharing Hub

Copyright Underwriters Laboratories Inc.
Provided by IHS under license with UL
No reproduction or networking permitted without license from IHS
Full document details: UL 268 2006

Licensee=University of Texas Revised Sub Account/5620001114
Not for Resale, 07/03/2008 23:02:14 MDT

57 Abnormal Operation Test 102
58 Locked Rotor Test 102
58.1 General 102
58.2 Thermal or overcurrent protection 102
58.3 Impedance protection 103
59 Dielectric Voltage-Withstand Test 104
60 Polarity Reversal Test 105
61 Tests on Polymeric Materials 105
61.1 General 105
61.2 Temperature test 105
61.3 Flame test (3/4 inch) 106
61.4 Flame test (5 inch) 107
62 Strain Relief Test 108
63 Non-compulsory Fire and Smoldering Smoke Tests 109
64 Accelerated Aging Test (Long-Term Stability Test) 109
65 Survivability Test 110
66 Audibility Test 110
66.1 General 110
66.2 Sound output measurement 110
67 Field Service Tests 111
67.1 Go/no-go field test 111
67.2 Maintenance (cleanability) 111
68 Battery Tests 111
69 Conformal Coatings on Printed Wiring Boards 112
69.1 Low voltage printed wiring boards 112
69.2 High voltage printed wiring boards 113

MANUFACTURING AND PRODUCTION TESTS

70 General 115
71 Sensitivity Calibration Tests 115
72 Photocell Illuminating Lamp Test 115
73 Production-Line Dielectric Voltage-Withstand Test 116

MARKING

74 General 117
75 Packaging Marking 120
76 Installation Instructions– Wiring Diagram 120
76.1 All detectors 120
76.2 Four-wire detectors 122
76.3 Two-wire detectors 122
77 Technical Bulletin 123

SUPPLEMENT SA - RELIABILITY PREDICTION AND CRITERIA FOR ACCEPTANCE

INSTRUCTIONS FOR DETERMINING A RELIABILITY PREDICTION OF ELECTRONIC COMPONENTS AND MICROELECTRIC CIRCUITS

SA1 Methods of Determining Failure Rate SA1

UL COPYRIGHTED MATERIAL –
NOT AUTHORIZED FOR FURTHER REPRODUCTION OR
DISTRIBUTION WITHOUT PERMISSION FROM UL
Documents
Document Sharing Hub
Copyright Underwriters Laboratories Inc.
Provided by IHS under license with UL
No reproduction or networking permitted without license from IHS
Full document details: UL 268 2006
Licensee=University of Texas Revised Sub Account/5620001114
Not for Resale, 07/03/2008 23:02:14 MDT

CRITERIA FOR ACCEPTANCE OF MICROELECTRONIC DEVICES

SA2 General SA9
SA3 Part I – Quality Assurance Screening Program SA9
SA4 Part II – Determination of Failure Rate Number Supplemented by Burn-In Test SA9
SA4.1 General SA9
SA4.2 Determination sequence SA11
SA4.3 Test calculations and procedures SA11
SA4.4 Test conditions SA12
SA4.5 Failure rate number calculation SA14

APPENDIX A

Standards for Components A1

APPENDIX B – OBSCURATION – OPTICAL DENSITY CHART

UL COPYRIGHTED MATERIAL –
NOT AUTHORIZED FOR FURTHER REPRODUCTION OR
DISTRIBUTION WITHOUT PERMISSION FROM UL

Documents
Document Sharing Hub

Copyright Underwriters Laboratories Inc.
Provided by IHS under license with UL
No reproduction or networking permitted without license from IHS
Full document details: UL 268 2006

Licensee=University of Texas Revised Sub Account/5620001114
Not for Resale, 07/03/2008 23:02:14 MDT

INTRODUCTION

1 Scope

1.1 These requirements cover smoke detectors intended to be employed in indoor locations in accordance with the National Fire Alarm Code, NFPA 72. These requirements also cover mechanical guards used to provide physical protection to installed smoke detectors.

1.2 A smoke detector, as covered by these requirements, consists of an assembly of electrical components coupled with a sensing means inside of a chamber, or by separate components, to detect smoke. The detector includes provision for the connection to a source of power, signaling, and remote control circuits. A heat detector, or audible signaling appliance, or both, are not prohibited from being incorporated as part of the smoke detector assembly.

1.3 These requirements cover the following types of detectors:

a) Detectors intended for open area protection and for connection to a compatible power supply or control unit for operation as part of a fire alarm system.

b) Detectors intended solely for control of releasing devices such as electromagnetic door holders, fire dampers or smoke dampers.

c) Detectors intended for both the applications described in (a) and (b) above.

1.4 This standard does not cover the following:

a) Control units to which the detectors are intended to be connected that are covered by the Standard for Control Units for Fire-Protective Signaling Systems, UL 864.

b) Self-contained single and multiple station smoke detectors, not intended for connection to a system control unit, that are covered by the Standard for Single and Multiple Station Smoke Alarms, UL 217.

c) A heat detector incorporated as a part of a smoke detector assembly, and covered by the Standard for Heat Detectors for Fire Protective Signaling Systems, UL 521; except for the requirements of the Fire Test (Heat Detector).

d) Fire tests for smoke detectors integral with combination door closers and holders that are covered by the Standard for Door Closers-Holders, With or Without Integral Smoke Detectors, UL 228.

e) Commercial-residential detectors not intended for connection to a system control unit that are covered by the Standard for Smoke Detector Monitors and Accessories for Individual Living Units of Multifamily Residences and Hotel/Motel Rooms, UL 1730.

1.5 These requirements also cover all remote accessories that are intended to be connected to a smoke detector.

UL COPYRIGHTED MATERIAL –
NOT AUTHORIZED FOR FURTHER REPRODUCTION OR
DISTRIBUTION WITHOUT PERMISSION FROM UL

Documents
Document Sharing Hub

Copyright Underwriters Laboratories Inc.
Provided by IHS under license with UL
No reproduction or networking permitted without license from IHS
Full document details: UL 268 2006

Licensee=University of Texas Revised Sub Account/5620001114
Not for Resale, 07/03/2008 23:02:14 MDT

1.6 A product that contains features, characteristics, components, materials, or systems new or different from those covered by the requirements in this standard, and that involves a risk of fire, electric shock, or injury to persons shall be evaluated using the appropriate additional component and end-product requirements as determined essential to maintain the intended level of safety as originally anticipated by the intent of this standard. A product whose features, characteristics, components, materials, or systems conflict with specific provisions of this standard cannot be judged to comply with this standard. Where identified as appropriate, revision of requirements shall be proposed and adopted in conformance with the methods employed for development, revision, and implementation of this standard.

2 General

2.1 Components

2.1.1 Except as indicated in 2.1.2, a component of a product covered by this standard shall comply with the requirements for that component. See Appendix A for a list of standards covering components used in the products covered by this standard.

2.1.2 A component is not required to comply with a specific requirement that:

a) Involves a feature or characteristic not required in the application of the component in the product covered by this statement or

b) Is superseded by a requirement in this standard.

2.1.3 A component shall be used in accordance with its rating established for the intended conditions of use.

2.1.4 Specific components are incomplete in construction features or restricted in performance capabilities. Such components are intended for use only under limited conditions, such as certain temperatures not exceeding specified limits, and shall be used only under those specific conditions.

2.2 Units of measurement

2.2.1 When a value for measurement is followed by a value in other units in parentheses, the first stated value is the requirement.

UL COPYRIGHTED MATERIAL –
NOT AUTHORIZED FOR FURTHER REPRODUCTION OR
DISTRIBUTION WITHOUT PERMISSION FROM UL

Documents
Document Sharing Hub

Copyright Underwriters Laboratories Inc.
Provided by IHS under license with UL
No reproduction or networking permitted without license from IHS
Full document details: UL 268 2006

Licensee=University of Texas Revised Sub Account/5620001114
Not for Resale, 07/03/2008 23:02:14 MDT

2.3 Undated references

2.3.1 Any undated reference to a code or standard appearing in the requirements of this standard shall be interpreted as referring to the latest edition of that code or standard.

3 Glossary

3.1 For the purpose of this standard the following definitions apply.

3.2 ALARM SIGNAL – A signal indicating an emergency that requires immediate action, such as a signal indicative of fire.

3.3 ALARM VERIFICATION – A feature of automatic fire detection and alarm systems to reduce unwanted alarms wherein smoke detectors report alarm conditions for a minimum period of time, or confirm alarm conditions within a given time period after being reset, in order to be accepted as a valid alarm initiation signal.

3.4 ANNUNCIATOR – A unit containing one or more indicator lamps, alphanumeric displays, or other equivalent means in which each indication provides status information about a circuit, condition, or location.

3.5 COMBINATION SMOKE AND HEAT DETECTOR – A detector that responds to excessive concentrations of smoke or heat.

3.6 COMBINATION SMOKE DETECTOR – A smoke detector that employs more than one smoke detecting principle in one unit. To qualify as a combination smoke detector it is required that each principle either predominate or contribute in response to at least one of the Fire Tests, Section 39, or the Smoldering Smoke Test, Section 40.

3.7 COMPONENT, LIMITED-LIFE – A component that is expected to fail and be periodically replaced and the failure of which is monitored, when failure of the component affects the intended operation, sensitivity, or both. Typical examples of such components include incandescent lamps, electronic tube heaters, and functional heating elements.

3.8 COMPONENT, RELIABLE – A component that is not expected to fail or be periodically replaced and is not monitored. A reliable component shall have a predicted failure rate of 2.5 or less failures per million hours as determined for a ″Ground Fixed″ (GF) environment by MIL-HDBK 217, or equivalent (see Supplement SA).

3.9 RISK OF ELECTRIC SHOCK – A risk of electric shock exists at any part when:

a) The potential between the part and earth ground or any other accessible part is more than 42.4 volts peak and

b) The continuous current flow through a 1500 ohm resistor connected across the potential exceeds 0.5 milliampere.

3.10 RISK OF FIRE – A risk of fire exists at any point in a circuit where:

a) The open circuit voltage is more than 42.4 volts peak and the energy available to the circuit under any condition of load including short circuit, results in a current of 8 amperes or more after 1 minute of operation or

UL COPYRIGHTED MATERIAL –
NOT AUTHORIZED FOR FURTHER REPRODUCTION OR
DISTRIBUTION WITHOUT PERMISSION FROM UL

Documents
Document Sharing Hub

Copyright Underwriters Laboratories Inc.
Provided by IHS under license with UL
No reproduction or networking permitted without license from IHS
Full document details: UL 268 2006

Licensee=University of Texas Revised Sub Account/5620001114
Not for Resale, 07/03/2008 23:02:14 MDT

b) A power of more than 15 watts shall only be delivered in an external resistor connected between the two points.

3.11 SENSITIVITY – Relative degree of response of a detector. A high sensitivity denotes response to a lower concentration of smoke than a low sensitivity, under identical smoke build-up conditions.

3.12 SMOKE DETECTOR – PROJECTED BEAM TYPE – A type of photoelectric light obscuration smoke detector wherein the beam spans the protected area.

3.13 SMOKE DETECTOR – SAMPLING TYPE – A detector that consists of a piping or tubing distribution network that runs from the detector to the area(s) to be protected. An aspiration fan in the detector housing draws air from the protected area back to the detector through air sampling ports, piping, or tubing. At the detector, the air is analyzed for fire products.

3.14 SMOKE DETECTOR – SPOT TYPE – A device whose detecting element is concentrated at a particular location. Example: chamber of a detector that encloses a radioactive source or light source and photocell assembly.

3.15 SMOKE DETECTOR – TWO-WIRE TYPE – A detector that signals over and obtains its power from the initiating device circuit of a fire alarm system control unit. It is not prohibited to provide additional terminals or leads for annunciation or control of supplementary functions.

3.16 TROUBLE SIGNAL – A signal initiated by the fire alarm system or device indicative of a fault in a monitored circuit or components.

3.17 VOLTAGE CLASSIFICATION – Unless otherwise indicated, all voltage and current values specified in this standard are root-mean-square (rms).

a) Low-Voltage Circuit – A circuit classified as low-voltage is one involving a potential of not more than 30 volts alternating current (AC) [42.4 volts peak or direct-current (DC)], and supplied from a circuit whose power is limited to a maximum of 100 volt-amperes (VA).

b) High-Voltage Circuit – A circuit classified as high-voltage is one having circuit characteristics in excess of those of a low-voltage circuit.

UL COPYRIGHTED MATERIAL –
NOT AUTHORIZED FOR FURTHER REPRODUCTION OR
DISTRIBUTION WITHOUT PERMISSION FROM UL

Documents
Document Sharing Hub

Copyright Underwriters Laboratories Inc.
Provided by IHS under license with UL
No reproduction or networking permitted without license from IHS
Full document details: UL 268 2006

Licensee=University of Texas Revised Sub Account/5620001114
Not for Resale, 07/03/2008 23:02:14 MDT

4 Detector Reliability Prediction

4.1 The maximum failure rate for a detector unit shall be 4.0 failures per million hours as calculated by a full part stress analysis prediction as described in MIL-HDBK 217 or 3.5 failures per million hours as calculated by a simplified parts count reliability prediction as described in MIL-HDBK 217, or equivalent. A ″Ground Fixed″ (GF) environment is to be used for all calculations. When actual equivalent data is available from the manufacturer, it is not prohibited that it be used in lieu of the projected data for the purpose of determining reliability.

4.2 Any component whose failure results in energization of an audible trouble signal, energization of a separate visual indication (orange or yellow), or de-energization of a power-on light, or:

a) Does not affect the normal operation or

b) Is evaluated by specific performance tests included in this standard,

is not required to be included in the failure rate calculation. Examples include the audible signal appliance, non-compulsory thermostat, test switch, and battery contacts.

4.3 An integral or remote accessory, such as an integral transmitter or remote sounding appliance, is not required to be included in the reliability prediction except for those components whose failure affects the normal operation of the detector.

4.4 A reliable light emitting diode (LED) of a single station smoke detector employing a photocell-light assembly shall have a predicted failure rate of not greater than 2.5 failures per million hours. See 18.1 – 18.3.

4.5 A custom integrated circuit (CHIP) employed in a detector shall have a predicted failure rate of not greater than 2.5 failures per million hours. The failure rate is to be determined through evaluation of data in a 3000 hour burn-in test, or equivalent.

5 Installation and Operating Instructions

5.1 A copy of the installation and operating instructions and related schematic wiring diagrams and installation drawings shall be used as a reference in the examination and test of the detector. For this purpose, a printed edition is not required. It is not prohibited that the information be included in a manual or technical bulletin.

5.2 The instructions and drawings shall include such directions and information as deemed by the manufacturer to be required for proper installation, testing, maintenance, operation, and use of the detector.

UL COPYRIGHTED MATERIAL –
NOT AUTHORIZED FOR FURTHER REPRODUCTION OR
DISTRIBUTION WITHOUT PERMISSION FROM UL

Documents
Document Sharing Hub

Copyright Underwriters Laboratories Inc.
Provided by IHS under license with UL
No reproduction or networking permitted without license from IHS
Full document details: UL 268 2006

Licensee=University of Texas Revised Sub Account/5620001114
Not for Resale, 07/03/2008 23:02:14 MDT

CONSTRUCTION

ASSEMBLY

6 General

6.1 Remote accessories

6.1.1 Unless specifically indicated otherwise, the construction requirements specified for a detector shall apply also for any remote accessories with which it is to be employed.

6.2 Sensitivity indicating means

6.2.1 Each detector shall be provided with a means for measuring or indicating the nominal sensitivity or sensitivity range of the detector, as described in 6.2.2, or a sensitivity test feature, as described in 6.2.3, after it has been installed as intended. Removal of a snap-on cover to gain access to the sensitivity control is permissible, only when no high-voltage parts are exposed or are able to be contacted by the user.

6.2.2 Measuring or indicating means include the use of jacks or terminals for connection of a meter, visual indicators (such as a change in frequency of a pulsing light visible with the detector installed), operation of a mechanical device (such as described in 6.2.3), or any arrangement determined to be equivalent.

6.2.3 The test feature is to verify that the sensitivity of the detector is within its marked range. Unless it is employed on a detector that has other means of measuring its sensitivity, the test feature shall consist of either an electrical means or a mechanical device which simulates a specified level of smoke in the sensing chamber or smoke obscuration of a beam.

6.2.4 The use of a plug-in type detector assembly that is removed readily for insertion of an adapter connected to metering equipment is appropriate. A plug-in type detector that is removed readily and connected to metering equipment is also appropriate.

6.2.5 A detector that incorporates a variable sensitivity setting intended to be field adjusted shall have a mechanical stop on the adjusting means for the maximum and minimum settings.

6.3 Radioactive materials

6.3.1 The manufacture, importation, distribution, marking, and disposal of smoke detectors containing radioactive material are subject to the safety requirements of local or state radiation control agencies, the U. S. Nuclear Regulatory Commission, or both.

6.3.2 Verification of the compliance of such detectors with the requirements of the regulating agency involved shall be obtained prior to, or concurrently with, the establishment of the requirements of this standard.

UL COPYRIGHTED MATERIAL –
NOT AUTHORIZED FOR FURTHER REPRODUCTION OR
DISTRIBUTION WITHOUT PERMISSION FROM UL

Documents
Document Sharing Hub

Copyright Underwriters Laboratories Inc.
Provided by IHS under license with UL
No reproduction or networking permitted without license from IHS
Full document details: UL 268 2006

Licensee=University of Texas Revised Sub Account/5620001114
Not for Resale, 07/03/2008 23:02:14 MDT

6.4 Insect guards

6.4.1 A detector shall be provided with a screen or equivalent protection (louvers, slots, holes) as a deterrent to entry of insects into the detecting chamber. The maximum opening size shall not be greater than 0.05 inch (1.27 mm).

6.4.2 To determine that the maximum opening size has not been exceeded, openings in rigid assemblies shall not permit passage of a 0.051 inch (1.30 mm) diameter rod. For nonrigid openings, such as a screen, ten measurements are to be made at different locations by an optical micrometer; five measurements are to be made in each direction (not on diagonal).

6.5 Supplementary heat detector

6.5.1 When a heat detector is provided integrally with a smoke detector, the temperature rating of the heat detector shall not be less than 135°F (57°C). The heat detector shall be either connected in the smoke detector circuit or intended for connection to a separate circuit.

6.6 Alarm verification feature

6.6.1 To reduce the effect of electrical and migratory smoke transients, it is not prohibited that a smoke detector to have provision for alarm verification. The alarm verification time shall be 10 to 30 seconds. See 31.8.1, 39.1.3, 40.2, and 74.1 (s).

Exception: It is appropriate for the alarm verification to be included in the related control unit circuit of a smoke detector whose sensitivity is preset at the specific control unit with which it is intended to be employed.

6.6.2 When an alarm verification feature is employed in a detector, a bypass arrangement, readily accessible after installation, shall be provided and shall be resettable after field testing is completed. It is appropriate to include the bypass as part of the sensitivity indicating means described in 6.2.1 – 6.2.4.

Exception: The bypass is not required when the detector complies with the Fire Tests, Section 39, and the Smoldering Smoke Test, Section 40.

6.7 Maintenance (cleanability)

6.7.1 A detector shall be capable of being cleaned without degradation of performance or disturbance of field wiring.

UL COPYRIGHTED MATERIAL –
NOT AUTHORIZED FOR FURTHER REPRODUCTION OR
DISTRIBUTION WITHOUT PERMISSION FROM UL

Documents
Document Sharing Hub

Copyright Underwriters Laboratories Inc.
Provided by IHS under license with UL
No reproduction or networking permitted without license from IHS
Full document details: UL 268 2006

Licensee=University of Texas Revised Sub Account/5620001114
Not for Resale, 07/03/2008 23:02:14 MDT

7 Compatibility Information

7.1 General

7.1.1 Compatibility between a two-wire smoke detector that receives its power from the initiating device circuit of a fire alarm system control unit is dependent upon the interaction between the circuit parameters, such as voltage, current, frequency, and impedance, of the detector and the initiating device circuit.

7.1.2 It is not prohibited for a detector that does not receive its power from the initiating device circuit of a control unit (conventionally a detector having four or more wires for field connection) to be employed with any electrically compatible fire alarm system control unit without the requirement for compatibility consideration as its connection does not impose any load on the initiating circuit. Under an alarm condition, the four-wire detector acts as a switch (similar to a manual station or heat detector) to place the system in alarm.

7.1.3 As a two-wire detector obtains its power from the initiating device circuit of a system control unit, its operation is dependent on the characteristics of the circuit to which it is connected as the detector imposes a resistive and capacitive load on the circuit. Similarly, the load imposed upon the initiating circuit by a connected detector shall not prevent alarm response by a control unit to a detector in alarm, nor prevent a trouble response to an open circuit after the last detector.

7.1.4 The connection of a two-wire smoke detector is restricted to the specific control units with which a compatibility evaluation has been made.

7.1.5 A supplementary signaling device – such as an audible appliance, relay, or annunciator lamp (LED) – that is integral with a two-wire smoke detector and that is also powered from an initiating device circuit of a fire alarm system control unit shall not be used when its operation, including level of audibility and light output, is inhibited by the operation limitation of the initiating device circuit.

7.2 Method of evaluation

7.2.1 In accordance with 7.1.1 – 7.1.5, to determine whether any combination of control unit and smoke detector or detectors is compatible, whether the detectors are the same model or a mixture of one or more models or types, the tests indicated in (a) and (b) are to be conducted:

a) The Dynamic Load Immunity Test in the Standard for Control Units for Fire-Protective Signaling Systems, UL 864.

b) The Two-Wire Smoke Detector Compatibility Tests in UL 864.

For test (b), a load representing the maximum number of detectors intended to be connected to the control unit initiating device circuit, whether one model or a mixture of several models, is to be employed.

UL COPYRIGHTED MATERIAL –
NOT AUTHORIZED FOR FURTHER REPRODUCTION OR
DISTRIBUTION WITHOUT PERMISSION FROM UL

Documents
Document Sharing Hub

Copyright Underwriters Laboratories Inc.
Provided by IHS under license with UL
No reproduction or networking permitted without license from IHS
Full document details: UL 268 2006

Licensee=University of Texas Revised Sub Account/5620001114
Not for Resale, 07/03/2008 23:02:14 MDT

7.3 Changes affecting compatibility

7.3.1 In the event of modifications to either detectors or control units which result in the possibility of incompatibility with previously installed compatible combinations, the modified product shall be assigned a different model number or the compatibility identification marking of the product shall be changed.

8 Servicing and Maintenance Protection

8.1 General

8.1.1 An uninsulated live part of a high-voltage circuit and moving parts that present a risk of injury to persons within the enclosure shall be located, guarded, or enclosed to reduce the risk of unintentional contact by persons performing service functions performed with the equipment energized.

8.1.2 An electrical component that requires examination, adjustment, servicing, or maintenance while energized shall be located and mounted with respect to other components and with respect to grounded metal parts so that it is accessible for service without subjecting the user to a risk of electric shock from adjacent uninsulated live parts.

8.1.3 The following are not identified as uninsulated live parts:

a) Coils of controllers, relays, and solenoids, and transformer windings, when the coils and windings are provided with appropriate insulating overwraps;

b) Enclosed motor windings;

c) Terminals and splices with insulation determined to be appropriate; and

d) Insulated wire.

8.2 Sharp edges

8.2.1 An enclosure, a frame, a guard, a handle, or similar parts of the construction shall not be sharp enough to constitute a risk of injury to persons in normal maintenance and use.

UL COPYRIGHTED MATERIAL –
NOT AUTHORIZED FOR FURTHER REPRODUCTION OR
DISTRIBUTION WITHOUT PERMISSION FROM UL

Documents
Document Sharing Hub

Copyright Underwriters Laboratories Inc.
Provided by IHS under license with UL
No reproduction or networking permitted without license from IHS
Full document details: UL 268 2006

Licensee=University of Texas Revised Sub Account/5620001114
Not for Resale, 07/03/2008 23:02:14 MDT

9 Enclosure

9.1 General

9.1.1 The enclosure of a detector shall be constructed to resist the abuses encountered in service. The degree of resistance to abuse inherent in the detector shall preclude total or partial collapse with the attendant reduction of spacings, loosening or displacement of parts, and other serious defects, which alone or in combination result in an increase in the risk of fire, electric shock, or injury to persons.

9.1.2 Enclosures for individual electrical components, outer enclosures, and combinations of the two are to be evaluated in determining compliance with the requirement specified in 9.1.1.

9.1.3 All electrical parts of a detector shall be enclosed to reduce the risk of contact with uninsulated live parts. A separate enclosure for field-wiring terminals that are to be enclosed by a back box is not required.

9.1.4 Nonfunctional rear openings (those that are not required for operation or installation of the detector) shall not permit the passage of any air current or debris which affects detector response to test smoke following installation as intended.

9.1.5 Following installation as intended there shall not be any openings between the intended mounting surface and the rear of the detector which allow for sufficient passage of air to affect detector response from test smoke.

9.1.6 To comply with 9.1.4 and 9.1.5, one of the following methods, or their equivalent, shall be used:

a) An elastomeric rubber or neoprene gasket, or the equivalent, interposed between the rear of the detector and the mounting surface to seal the rear openings and preclude the escape of air from around the edge of the detector; or

b) Instructions in the installation manual provided to describe the location and method(s) of applying a sealing compound that has been found appropriate for the intended use; or

c) An arrangement determined to be equivalent to (a) or (b).

9.1.7 To determine compliance with the requirements of 9.1.4 – 9.1.6 representative detectors shall be subjected to the Smoke Entry (Stack Effect) Test, Section 34.

9.1.8 The enclosure of a detector shall be provided with means for mounting in the intended manner. Any fittings, such as brackets or hangers, required for mounting shall be furnished with the detector. The mounting means shall be accessible without disassembling any operating part of the detector. The removal of a completely assembled panel, cover, or equivalent, to mount the detector is not identified as disassembly of an operating part.

9.1.9 An enclosure shall have provision for the connection of metal-clad cable, conduit, or nonmetallic sheathed cable. An enclosure without such provision shall be used only when the enclosure is furnished with definite instructions indicating the sections of the enclosure that are intended to be drilled in the field for the connection of raceways, or when the detector is intended for mounting on an outlet box.

UL COPYRIGHTED MATERIAL –
NOT AUTHORIZED FOR FURTHER REPRODUCTION OR
DISTRIBUTION WITHOUT PERMISSION FROM UL

Documents
Document Sharing Hub

Copyright Underwriters Laboratories Inc.
Provided by IHS under license with UL
No reproduction or networking permitted without license from IHS
Full document details: UL 268 2006

Licensee=University of Texas Revised Sub Account/5620001114
Not for Resale, 07/03/2008 23:02:14 MDT

9.2 Cast metal enclosures

9.2.1 The thickness of cast metal used for an enclosure shall be as indicated in Table 9.1. Cast metal having a thickness 1/32 inch (0.8 mm) less than that indicated in Table 9.1 shall be employed only when the surface under consideration is curved, ribbed, or otherwise reinforced, or when the shape of the surface, size of the surface, or both, are such that equivalent mechanical strength is determined to be provided.

Table 9.1
Cast metal enclosures

Use or dimensions of area involved	Minimum thickness			
	Die-cast metal,		Cast metal of other than the die-cast type,	
	inch	(mm)	inch	(mm)
Area of 24 square inches (155 cm^2) or less and having no dimension greater than 6 inches (152 mm)	1/16[a]	1.6	1/8	3.2
Area greater than 24 square inches (155 cm^2) or having any dimension greater than 6 inches (152 mm)	3/32	2.4	1/8	3.2
At a threaded conduit hole	1/4	6.4	1/4	6.4
At an unthreaded conduit hole	1/8	3.2	1/8	3.2

[a] The area limitation for metal 1/16 inch (1.6 mm) thick is obtained by the provision of reinforcing ribs subdividing a larger area.

9.2.2 When threads for the connection of conduit are tapped all the way through a hole in an enclosure wall, there shall not be less than 3-1/2 nor more than 5 threads in the metal, and the construction shall be such that a standard conduit bushing is capable of being attached.

9.2.3 When threads for the connection of conduit are tapped only part of the way through a hole in an enclosure wall, there shall be a smooth, rounded inlet hole for the conductors that shall afford protection to the conductors equivalent to that provided by a standard conduit bushing.

9.3 Sheet metal enclosures

9.3.1 The thickness of sheet metal employed for the enclosure of a detector shall not be less than that indicated in Table 9.2, except that sheet metal of two gage sizes lesser thickness shall be employed only when the surface under consideration is curved, ribbed, or otherwise reinforced, or when the shape of the surface, the size of the surface, or both, are such that equivalent mechanical strength is determined to be provided.

9.3.2 At any point where conduit or metal-clad cable is to be attached, sheet metal shall have a thickness not less than 0.032 inch (0.81 mm) when of uncoated steel, not less than 0.034 inch (0.86 mm) when of galvanized steel, and not less than 0.045 inch (1.14 mm) when of nonferrous metal.

UL COPYRIGHTED MATERIAL –
NOT AUTHORIZED FOR FURTHER REPRODUCTION OR
DISTRIBUTION WITHOUT PERMISSION FROM UL
Documents
Document Sharing Hub

Copyright Underwriters Laboratories Inc.
Provided by IHS under license with UL
No reproduction or networking permitted without license from IHS
Full document details: UL 268 2006

Licensee=University of Texas Revised Sub Account/5620001114
Not for Resale, 07/03/2008 23:02:14 MDT

Table 9.2
Sheet metal enclosures

Maximum dimensions of enclosure				Minimum thickness of sheet metal								
Length or width,		Area,		Steel, zinc-coated,			Steel, uncoated,			Brass or aluminum,		
inches	(mm)	inches^2	(cm)^2	inch	(mm)	GSG	inch	(mm)	GSG	inch	(mm)	AWG
12	305	90	581	0.034	0.86	20	0.032	0.81	20	0.045	1.14	16
24	610	360	2322	0.045	1.14	18	0.042	1.07	18	0.058	1.47	14
48	1219	1200	7742	0.056	1.42	16	0.053	1.35	16	0.075	1.91	12
60	1524	1500	9678	0.070	1.78	14	0.067	1.70	14	0.095	2.41	10
Over 60	1524	Over 1500	9678	0.097	2.46	12	0.093	2.36	12	0.122	3.10	8

9.3.3 A ferrous plate or plug closure for an unused conduit opening or other hole in the enclosure shall have a thickness not less than 0.027 inch (0.69 mm) or 0.032 inch (0.81 mm) nonferrous metal for a hole having a 1-3/8 inch (34.9 mm) diameter maximum dimension.

9.3.4 A closure for a hole larger than 1-3/8 inch (34.9 mm) diameter shall have a thickness equal to that required for the enclosure of the detector or a standard knockout seal shall be used.

9.3.5 A knockout in a sheet metal enclosure shall be secured and shall be capable of being removed without excessive deformation of the enclosure.

9.3.6 A knockout shall be provided with a surrounding surface for seating of a conduit bushing, and shall be located so that installation of a bushing at any knockout used during installation does not result in spacings between uninsulated live parts and the bushing of less than those indicated in Spacings, General, Section 27.

9.4 Nonmetallic enclosures

9.4.1 An enclosure or parts of an enclosure of nonmetallic material shall be formed so that operating parts are protected against damage. The mechanical strength of the enclosure shall be at least equivalent to a sheet metal enclosure of the minimum thickness specified in Table 9.2. See also the Tests on Polymeric Materials, Section 61.

9.4.2 The continuity of any grounding system intended for a detector connection shall not rely on the dimensional integrity of the nonmetallic material.

9.4.3 Polymeric material used for an enclosure shall comply with the following requirements:

a) Enclosures containing parts including a risk of fire – minimum flammability rating of V-0 and successful completion of the Flame Test (5 inch), Section 61.4.

b) Enclosures containing power limited and Class 3 circuits with a voltage not exceeding 30 volts AC, 42.4 volts-peak, or 60 volts DC – minimum flammability rating of HB and successful completion of the Flame Test (3/4 inch), Section 61.3.

c) Enclosures containing circuits powered by sources with energy limited to 15 watts – minimum flammability rating of HB.

UL COPYRIGHTED MATERIAL –
NOT AUTHORIZED FOR FURTHER REPRODUCTION OR
DISTRIBUTION WITHOUT PERMISSION FROM UL
Documents
Document Sharing Hub

Copyright Underwriters Laboratories Inc.
Provided by IHS under license with UL
No reproduction or networking permitted without license from IHS
Full document details: UL 268 2006

Licensee=University of Texas Revised Sub Account/5620001114
Not for Resale, 07/03/2008 23:02:14 MDT

9.5 Ventilating openings

9.5.1 Ventilating openings in an enclosure for high-voltage circuits, including perforated holes, louvers, and openings protected by means of wire screening, expanded metal, or perforated covers, shall be of such size or shape that no opening permits passage of a rod having a diameter of 33/64 inch (13.1 mm). An enclosure for a fuse(s) or other overload protective device and provided with ventilating openings shall not permit the emission of flame or molten metal. Openings provided which permit cleaning of internal parts shall not permit damage to functional internal components during such cleaning operations.

9.5.2 Perforated sheet metal and sheet metal employed for expanded metal mesh shall be not less than 0.042 inch (1.07 mm) in average thickness, 0.046 inch (1.17 mm) when zinc coated.

9.5.3 When the indentation of the guard of enclosure does not alter the clearance between uninsulated live parts and grounded metal so as to reduce spacings below the minimum values required, it is appropriate for 0.021 inch (0.53 mm) expanded metal mesh or perforated sheet metal, 0.024 inch (0.61 mm) when zinc coated, to be employed under the following conditions:

a) The exposed area on any one side or surface of the product is not greater than 72 square inches (464 cm^2) and has no dimension greater than 12 inches (305 mm) or

b) The width of an opening so protected is not greater than 3-1/2 inches (88.9 mm).

9.5.4 The wires forming a screen protecting current-carrying parts shall not be smaller than No. 16 AWG (1.3 mm^2), and the screen openings shall not be greater than 1/2 square inch (3.2 cm^2) in area.

9.6 Covers

9.6.1 An enclosure cover of a detector shall be hinged, sliding, pivoted, or similarly attached when:

a) It provides ready access to fuses or any other overcurrent protective device, the intended protective functioning of which requires renewal or

b) It is required to periodically open the cover in connection with the intended operation of the detector.

For the purpose of this requirement, intended operation is identified as operation of a switch for testing or for silencing an audible signal appliance or operation of any other component of a detector that requires such action in connection with its intended performance.

9.6.2 A cover that is intended to be removed only for periodic cleaning of the sensing chamber or replacement of a lamp shall be secured by any one of the following or equivalent means: snap catch, plug-in or twist action, snap tab with one screw, or two screws.

9.6.3 When a detector cover is not intended to be removed for cleaning, maintenance, or both, and the detector is intended to be returned to the factory for servicing, the cover shall be secured so that it cannot be readily removed. Exposed screw slots or nuts, other than a tamperproof type, shall be sealed or covered. See 74.1 (q) for supplementary marking.

Exception: These requirements do not apply when the detector cover is intended to be removed for cleaning, maintenance, or both, even though the detector is intended to be returned to the manufacturer for servicing.

UL COPYRIGHTED MATERIAL –
NOT AUTHORIZED FOR FURTHER REPRODUCTION OR
DISTRIBUTION WITHOUT PERMISSION FROM UL

Documents
Document Sharing Hub

--`,,,`,`,`,`,,`,`,`,`,`,`,`,`,`,`,`,`,`-`-`,,`,,`,`,,`---

Copyright Underwriters Laboratories Inc.
Provided by IHS under license with UL
No reproduction or networking permitted without license from IHS
Full document details: UL 268 2006

Licensee=University of Texas Revised Sub Account/5620001114
Not for Resale, 07/03/2008 23:02:14 MDT

9.6.4 A hinged cover is not required where the only fuse(s) enclosed is intended to provide protection to portions of internal circuits, such as a fuse on a separate printed wiring board or circuit subassembly, to prevent excessive circuit damage resulting from a fault. The use of such a fuse(s) shall be used only when the word ″CAUTION ″ and the following or equivalent marking is indicated on the cover of a detector employing high-voltage circuits: ″Circuit Fuse(s) Inside – Disconnect Power Prior To Servicing. ″ This marking is not required where only low-voltage circuits are involved.

9.6.5 A hinged cover shall be provided with a latch, screw, or catch to hold it closed. An unhinged cover shall be securely held in place by screws or the equivalent.

9.7 Glass panels

9.7.1 Glass covering an enclosure opening shall be held securely in place so that it cannot be displaced in service and shall provide mechanical protection of the enclosed parts. The thickness of a glass cover shall not be less than the applicable value indicated in Table 9.3.

Table 9.3
Thickness of glass covers

Maximum size of opening				Minimum thickness,	
Length or width,		Area,			
inches	(mm)	inches^2	(cm^2)	inch	(mm)
4	102	16	103	1/16	1.6
12	305	144	929	1/8	3.2
Over 12	Over 305	Over 144	Over 929	see footnote a	see footnote a

[a] 1/8 inch (3.2 mm) or more, based upon the size, shape, and mounting of the glass panel. A glass panel for an opening having an area greater than 144 square inches (929 cm^2), or having any dimension greater than 12 inches (305 mm), shall be supported by a continuous groove not less than 3/16 inch (4.8 mm) deep along all four edges of the panel.

9.7.2 A transparent material other than glass employed as a cover over an opening in an enclosure shall:

a) Have mechanical strength determined to be equivalent to that of glass,

b) Not distort, or

c) Not become less transparent at temperatures to which it is subjected under normal or abnormal service conditions.

9.7.3 A lens, light filter, or similar part of a smoke detector shall be constructed of a material the transparency of which is not impaired by the conditions to which it is exposed in service as represented by the performance tests described in Sections 29 – 69.

UL COPYRIGHTED MATERIAL –
NOT AUTHORIZED FOR FURTHER REPRODUCTION OR
DISTRIBUTION WITHOUT PERMISSION FROM UL

Documents
Document Sharing Hub

Copyright Underwriters Laboratories Inc.
Provided by IHS under license with UL
No reproduction or networking permitted without license from IHS
Full document details: UL 268 2006

Licensee=University of Texas Revised Sub Account/5620001114
Not for Resale, 07/03/2008 23:02:14 MDT

10 Corrosion Protection

10.1 Iron and steel parts shall be protected against corrosion by enameling, galvanizing, plating, or other means determined to be equivalent.

Exception: Parts made of stainless steel, polished or treated when required, do not require additional protection.

10.2 The requirement of 10.1 applies to all enclosures, whether of sheet steel or cast iron, and to all springs and other parts upon which operation depends. It does not apply to minor parts such as washers, screws, and bolts, when the deterioration of such unprotected parts does not result in noncompliance with this standard or impair the operation of the detector.

10.3 Bearing surfaces shall be of such materials that reduce the risk of binding due to corrosion.

10.4 Metal shall not be used in combinations such as to result in galvanic action that results in deterioration of cabinets or enclosures.

10.5 Hinges and other attachments shall be resistant to corrosion.

10.6 Nonferrous cabinets and enclosures do not require special corrosion protection.

11 Field Wiring Connections

11.1 General

11.1.1 A detector shall be provided with wiring terminals or leads for the connection of conductors of at least the size required by the National Electrical Code, ANSI/NFPA 70, corresponding to the electrical rating of the detector. Duplicate terminals or leads, or an equivalent arrangement, shall be provided for circuits supplying operating power to the detector (where the operating power is monitored by an end-of-line device) and for circuits transmitting alarm signals from the detector to the control unit, one for each incoming and one for each outgoing wire. It is not prohibited that a common terminal be used in lieu of duplicate terminals when it is intended to prevent the looping of an unbroken wire around or under a terminal screw in a manner that permits the looped wire to remain unbroken during installation, thereby precluding monitoring in the event the wire becomes dislodged from under the terminal. A notched clamping plate under a single securing screw, where separate conductors are intended to be inserted in each notch, is an equivalent arrangement. When duplicate terminals or leads are used and there is no provision to prevent looping an unbroken wire around or under one terminal, the marking in 76.1.2 (c) shall be provided.

UL COPYRIGHTED MATERIAL –
NOT AUTHORIZED FOR FURTHER REPRODUCTION OR
DISTRIBUTION WITHOUT PERMISSION FROM UL

Documents
Document Sharing Hub

Copyright Underwriters Laboratories Inc.
Provided by IHS under license with UL
No reproduction or networking permitted without license from IHS
Full document details: UL 268 2006

Licensee=University of Texas Revised Sub Account/5620001114
Not for Resale, 07/03/2008 23:02:14 MDT

11.2 Field wiring compartment

11.2.1 The field wiring compartment area shall be of sufficient size for completing all field wiring connections as specified by the installation wiring diagram. There shall be space within the compartment to permit the use of a standard conduit bushing on conduit connected to the compartment when a bushing is required for installation.

11.2.2 Protection for internal components and wire insulation from sharp edges shall be provided by insulating barriers or metal barriers having smooth rounded edges.

11.2.3 The location of an outlet box or compartment in which field wiring connections are to be made shall be such that inspection of the connections, following installation of the detector as intended, is possible.

11.3 Field wiring terminals

11.3.1 Terminal parts to which field connections are to be made shall consist of binding screws with terminal plates having upturned lugs or the equivalent to hold the wires in position. Other terminal connections shall be provided only when found to be equivalent.

11.3.2 When a wire-binding screw is employed at a field wiring terminal, the screw shall be not smaller than a No. 6 (3.5 mm diameter). It is not prohibited that the screw be plated steel.

11.3.3 A terminal plate tapped for a wire-binding screw shall be of a nonferrous metal not less than 0.030 inch (0.76 mm) thick and shall have not less than two full threads in the metal. See 11.3.4.

11.3.4 It is not prohibited that a terminal plate have the metal extruded at the tapped hole for the binding screw so as to provide two full threads. Other constructions shall be employed only when they are identified as providing equivalent security.

11.3.5 When more than one conductor is to be connected to the same terminal, a nonferrous intervening washer shall be provided for each additional conductor. When the conductors are separated and secured under a common clamping plate, a separate washer is not required.

11.4 Field wiring leads

11.4.1 Leads provided for field connections shall not be less than 6 inches (152 mm) long; shall be provided with strain relief; shall not be smaller than No. 18 AWG (0.82 mm^2); and the insulation, when of rubber or thermoplastic, shall not be less than 1/32 inch (0.8 mm) thick.

UL COPYRIGHTED MATERIAL –
NOT AUTHORIZED FOR FURTHER REPRODUCTION OR
DISTRIBUTION WITHOUT PERMISSION FROM UL

Documents
Document Sharing Hub

Copyright Underwriters Laboratories Inc.
Provided by IHS under license with UL
No reproduction or networking permitted without license from IHS
Full document details: UL 268 2006

Licensee=University of Texas Revised Sub Account/5620001114
Not for Resale, 07/03/2008 23:02:14 MDT

11.5 Grounding terminals and leads

11.5.1 A high-voltage detector which is provided with an overall nonmetallic enclosure and cover, is intended to be serviced internally, and employs internal dead metal parts which become energized under fault conditions, requires an equipment grounding terminal or lead, or the equivalent.

11.5.2 An equipment grounding terminal or lead is not required for:

a) A low-voltage detector;

b) A high-voltage detector provided with an overall nonmetallic enclosure and cover and that is not intended to be internally serviced; or

c) A high-voltage detector provided with an overall nonmetallic enclosure and cover, and:

1) That does not employ internal dead-metal parts which are energized under a fault condition and be contacted during servicing, or

2) Having internal dead metal parts that are insulated; or

d) A high-voltage detector provided with an overall nonmetallic enclosure and cover that includes internal dead metal parts which are contacted during servicing, and employs a 2-pole disconnect switch which de-energizes both legs of the supply circuit upon removal of the cover.

11.5.3 The grounding means shall be connected to all exposed dead metal parts that become energized and all dead metal parts within the enclosure that are exposed to contact during servicing and maintenance. See Bonding for Grounding, Section 13.

11.5.4 The surface of an insulated lead intended solely for the connection of an equipment grounding conductor shall be green, with or without one or more yellow stripes, and no other leads visible to the installer, other than grounding conductors, shall be so identified. A field wiring terminal intended for connection of an equipment grounding conductor shall be plainly identified, such as by being marked ″G,″ ″GR,″ ″Ground,″ ″Grounding,″ or the equivalent, or by a marking on a wiring diagram provided on the detector. The field wiring terminal shall be located so that it won't to be removed during servicing of the detector.

UL COPYRIGHTED MATERIAL –
NOT AUTHORIZED FOR FURTHER REPRODUCTION OR
DISTRIBUTION WITHOUT PERMISSION FROM UL

Documents
Document Sharing Hub

Copyright Underwriters Laboratories Inc.
Provided by IHS under license with UL
No reproduction or networking permitted without license from IHS
Full document details: UL 268 2006

Licensee=University of Texas Revised Sub Account/5620001114
Not for Resale, 07/03/2008 23:02:14 MDT

11.6 Grounded supply terminals and leads

11.6.1 A field wiring terminal for the connection of the grounded supply conductor of a high-voltage circuit shall be identified by means of a metallic plated coating substantially white in color and shall be readily distinguishable from the other terminals, or identification of the terminal for the connection of the grounded conductor shall be clearly shown in some other manner, such as on an attached wiring diagram.

11.6.2 A field wiring lead provided for connection of the grounded supply conductor of a high-voltage circuit shall be finished to show a white or natural gray color and shall be readily distinguishable from other leads and no other leads visible to the installer, other than grounded conductors, shall be so identified.

11.6.3 A terminal or lead identified for the connection of the grounded supply conductor shall not be electrically connected to a single-pole manual switching device which has an OFF position or to a single-pole overcurrent (not thermal) protective device.

11.7 Isolated (nongrounded) detectors

11.7.1 When a detector is constructed such that the exposed metal enclosure serves as a current-carrying part of the circuit, an insulated (nonmetallic) mounting plate, or a metal mounting plate with insulated bushed holes through which metal mounting screws are employed, or an equivalent arrangement shall be provided for installation between the detector current-carrying parts and metal back box.

11.7.2 The arrangement described in 11.7.1 is permitted only on a detector intended for connection to a low-voltage circuit. In addition, the word ″CAUTION ″ and the following or equivalent marking is to be displayed in letters at least 1/8 inch (3.2 mm) high adjacent to the detector wiring area: ″INSTALL ENCLOSURE ISOLATED FROM GROUND PER MANUFACTURER'S INSTRUCTIONS AND HARDWARE PROVIDED. GROUNDING COULD RESULT IN A FALSE ALARM. ″

12 Internal Wiring

12.1 General

12.1.1 The internal wiring of a detector shall consist of conductors having:

a) Insulation rated for the potential involved,

b) Insulation rated for the temperatures to which they are subjected, and

c) The current-carrying capacity for the service.

The wiring shall be routed away from the moving parts and sharp projections and held in place with clamps, string, ties, or the equivalent, unless the wiring is determined to be rigid enough to retain a shaped form.

12.1.2 Leads, or a cable assembly, connected to parts mounted on a hinged cover, shall permit the full opening of the cover without applying stress to the leads or their connections. The leads shall be secured or equivalently arranged to reduce the risk of insulation abrasion and jamming between parts of the enclosure.

UL COPYRIGHTED MATERIAL –
NOT AUTHORIZED FOR FURTHER REPRODUCTION OR
DISTRIBUTION WITHOUT PERMISSION FROM UL

Documents
Document Sharing Hub

Copyright Underwriters Laboratories Inc.
Provided by IHS under license with UL
No reproduction or networking permitted without license from IHS
Full document details: UL 268 2006

Licensee=University of Texas Revised Sub Account/5620001114
Not for Resale, 07/03/2008 23:02:14 MDT

12.1.3 When the use of a short length of insulated conductor is not feasible, such as for a short coil lead, it is not prohibited for electrical insulating tubing to be employed. The tubing shall not be subjected to sharp bends, tension, compression, or repeated flexing and shall not contact sharp edges, projections, or corners. The wall thickness of the tubing shall comply with the requirements for such tubing, except that the wall thickness at any point for polyvinyl chloride tubing of 3/8 inch (9.5 mm) diameter or less shall not be less than 0.017 inch (0.43 mm). For insulating tubing of other types, the wall thickness shall not be less than that required to at least equal the mechanical strength, dielectric properties, and heat and moisture resistance characteristics of polyvinyl chloride tubing having a wall thickness of 0.017 inch (0.43 mm).

12.1.4 Internal wiring of circuits operating at different potentials shall be separated by barriers or shall be segregated, unless the conductors of the circuits of lower voltage are provided with insulation equivalent to that required for the highest voltage involved. Segregation of insulated conductors is to be accomplished by clamping, routing, or equivalent means that provide permanent separation.

12.1.5 Stranded conductors clamped under wire-binding screws or similar parts shall have the individual strands soldered together or be equivalently arranged to provide secure connections.

12.2 Wireways

12.2.1 Wireways shall be smooth and free from sharp edges, burrs, fins, and moving parts that result in the abrasion the conductor insulation.

12.3 Splices

12.3.1 All splices and connections shall be mechanically secured to preclude shorting to adjacent uninsulated current carrying parts in the event that an improper connection such as a cold solder joint is made. Tack soldering is permitted where the construction precludes mechanical security only when 5 samples resist a pull-force of 2 lbs (8.9 N) applied for 3 seconds and the connection is subjected to 100 percent inspection and testing with the same pull force by the manufacturer.

12.3.2 A splice shall be provided with insulation determined to be equivalent to that of the wires involved when permanence of electrical spacings between the splice and uninsulated metal parts is not provided.

12.3.3 Splices shall be located, enclosed, and supported so that flexing, movement, or vibration does not damage the insulation or affect the integrity of the splice.

UL COPYRIGHTED MATERIAL –
NOT AUTHORIZED FOR FURTHER REPRODUCTION OR
DISTRIBUTION WITHOUT PERMISSION FROM UL

Documents
Document Sharing Hub

Copyright Underwriters Laboratories Inc.
Provided by IHS under license with UL
No reproduction or networking permitted without license from IHS
Full document details: UL 268 2006

Licensee=University of Texas Revised Sub Account/5620001114
Not for Resale, 07/03/2008 23:02:14 MDT

12.4 Barriers

12.4.1 A metal barrier shall have a thickness at least equal to that required by Table 9.2 as determined by the size of the barrier. A barrier of insulating material shall not be less than 0.028 inch (0.71 mm) thick and shall be thicker when it is possible for deformation which defeats its purpose to be easily accomplished. Any clearance between the edge of a barrier and a compartment wall shall not be more than 1/16 inch (1.6 mm).

12.5 Strain relief

12.5.1 A strain relief means shall be provided for the field supply leads and all internally connected wires or cords that are subject to movement in conjunction with the installation, operation, or servicing of a detector to reduce the risk of any mechanical stress being transmitted to internal connections and terminals. Inward movement of the cord or leads provided with a ring-type cord grip shall not damage internal connections or components, or result in a reduction of the electrical spacings required. See the Strain Relief Test, Section 62.

13 Bonding for Grounding

13.1 An exposed noncurrent-carrying metal part of a high-voltage detector that becomes energized shall be bonded to the point of connection of the field equipment grounding terminal or lead, when provided or required, and to the metal surrounding the knockout, hole, or bushing provided for field power supply connections. See 11.5.1.

13.2 Uninsulated metal parts of electrical enclosures, motor frames and mounting brackets, controller mounting brackets, capacitors, and other electrical components shall be bonded for grounding when it is possible that they be contacted by the user or by a serviceman in servicing or operating the equipment.

13.3 Metal parts as described below are not required to comply with the requirement specified in 13.2 :

a) Adhesive attached metal foil markings, screws, and handles, that are located on the outside of the detector enclosure and isolated from electrical components or wiring by grounded metal parts so that they shall not become energized.

b) Isolated metal parts, such as small assembly screws, that are separated from wiring and uninsulated live parts.

c) Panels and covers which do not enclose uninsulated live parts, when wiring is positively separated from the panel or cover so that it shall not become energized.

d) Panels and covers which are insulated from electrical components and wiring by an insulating barrier of vulcanized fiber, varnished cloth, phenolic composition, or similar material not less than 1/32 inch (0.8 mm) thick and secured in place.

13.4 A bonding conductor shall be of material determined to be capable for use as an electrical conductor. When of ferrous metal, it shall be protected against corrosion by painting, plating, or the equivalent. The conductor shall not be smaller than the maximum size wire employed in the circuit wiring of the component or part. A separate bonding conductor or strap shall be installed in such a manner that it is protected from mechanical damage.

UL COPYRIGHTED MATERIAL –
NOT AUTHORIZED FOR FURTHER REPRODUCTION OR
DISTRIBUTION WITHOUT PERMISSION FROM UL

Documents
Document Sharing Hub

Copyright Underwriters Laboratories Inc.
Provided by IHS under license with UL
No reproduction or networking permitted without license from IHS
Full document details: UL 268 2006

Licensee=University of Texas Revised Sub Account/5620001114
Not for Resale, 07/03/2008 23:02:14 MDT

13.5 The bonding shall be by a positive means, such as by clamping, riveting, bolted or screwed connection, brazing, or welding. The bonding connection shall penetrate nonconductive coatings such as paint. Bonding around a resilient mount shall not depend on the clamping action of rubber of similar material.

13.6 A bolted or screwed connection that incorporates a star washer under the screwhead is appropriate for penetrating nonconductive coatings.

13.7 When the bonding means depends upon screw threads, two or more screws or two full threads of a single screw engaging metal is appropriate.

13.8 Metal-to-metal hinge-bearing members for doors or covers shall be used as a means for bonding the door or cover for grounding only when a multiple bearing-pin type hinge is employed.

13.9 Splices shall not be employed in conductors used to bond electrical enclosures or components.

COMPONENTS

14 General

14.1 Mounting of components

14.1.1 A switch, lampholder, attachment-plug receptacle, plug connector, or similar electrical component, and uninsulated live parts shall be mounted securely and shall not turn.

Exception No. 1: It is not required that a switch be prevented from turning when all four of the following conditions are met:

a) The switch is of a plunger or other type that does not tend to rotate when operated. A toggle switch is subject to forces that tend to turn the switch during operation of the switch.

b) The means for mounting the switch makes so that the operation of the switch shall loosen it.

c) The spacings are not reduced below the minimum required values when the switch rotates.

d) The operation of the switch is by mechanical means rather than by the direct contact by persons.

Exception No. 2: A lampholder of the type in which the lamp cannot be replaced, such as a neon pilot or indicator light in which the lamp is sealed in a nonremovable jewel, are not required to be prevented from turning when rotation does not reduce spacings below the minimum values required.

14.1.2 Uninsulated live parts shall be secured to the base or mounting surface so that they shall not turn or shift in position, when it is possible that such motion results in a reduction of spacings. Friction between surfaces shall not be used as a means to prevent shifting or turning of live parts, a lock washer applied as intended is appropriate.

UL COPYRIGHTED MATERIAL –
NOT AUTHORIZED FOR FURTHER REPRODUCTION OR
DISTRIBUTION WITHOUT PERMISSION FROM UL

Documents
Document Sharing Hub

Copyright Underwriters Laboratories Inc.
Provided by IHS under license with UL
No reproduction or networking permitted without license from IHS
Full document details: UL 268 2006

Licensee=University of Texas Revised Sub Account/5620001114
Not for Resale, 07/03/2008 23:02:14 MDT

14.1.3 Uninsulated live parts, for example, field wiring terminals, shall be secured to their supporting surfaces by methods other than friction between surfaces so that they shall not turn or shift in position when such motion results in reduction of spacings below the minimum values required. This is to be accomplished by two screws or rivets, by square shoulders or mortices, by a dowel pin, lug, or offset, by a connecting strap or clip fitted into an adjacent part, or by any method determined to be equivalent.

14.2 Operating components

14.2.1 Operating components and assemblies, such as switches, relays, and similar devices, shall be protected by individual dust covers or dust tight cabinets against fouling by dust or by other material which affect their operation.

14.2.2 Adjusting screws and similar adjustable parts shall not loosen under the conditions of actual use. The use of a lock washer, applied as intended, to reduce the risk of loosening is appropriate.

14.3 Current-carrying parts

14.3.1 A current-carrying part shall be of metal such as silver, copper or copper alloy, or equivalent material.

14.3.2 Parts such as bearings and hinges shall not be used to carry current between fixed and moving parts.

15 Bushings

15.1 When a lead or wire harness passes through an opening in a wall, barrier, or enclosing case, there shall be a metal or insulating type bushing, or the equivalent, that shall be substantial, secured in place, and have a smooth, rounded surface to provide support for the wire.

15.2 When the opening is in a phenolic composition or other nonconducting material or in metal of thickness greater than 0.042 inch (1.07 mm), a smooth surface having rounded edges is identified as the equivalent of a bushing.

15.3 Ceramic materials and some molded compositions are not prohibited for insulating bushings, separate bushings of wood and of hot-molded shellac are prohibited.

15.4 Fiber shall be employed only where:

a) It is not be subjected to a temperature higher than 90°C (194°F) under normal operating conditions;

b) The bushing is not less than 1/16 inch (1.6 mm) thick, with a minus tolerance of 1/64 inch (0.4 mm) for manufacturing variations; and

c) It does not deteriorate in normal ambient humidity conditions.

UL COPYRIGHTED MATERIAL –
NOT AUTHORIZED FOR FURTHER REPRODUCTION OR
DISTRIBUTION WITHOUT PERMISSION FROM UL

Documents
Document Sharing Hub

Copyright Underwriters Laboratories Inc.
Provided by IHS under license with UL
No reproduction or networking permitted without license from IHS
Full document details: UL 268 2006

Licensee=University of Texas Revised Sub Account/5620001114
Not for Resale, 07/03/2008 23:02:14 MDT

15.5 When a soft rubber bushing or similar material that deteriorates with age is employed in a hole in metal, the hole shall be free from sharp edges, burrs, projections, and other anomalies which cut into the bushing and wire insulation.

15.6 An insulating metal grommet shall be used in lieu of an insulating bushing, only when the insulating material used is not less than 1/32 inch (0.8 mm) thick and completely fills the space between the grommet and the metal in which it is mounted.

16 Electrical Insulating Material

16.1 Material for the mounting of current-carrying parts shall be porcelain, phenolic composition, cold-molded composition, or equivalent material.

16.2 Polymeric materials are to be used for the sole support of uninsulated live parts only when determined to be equivalent to the materials indicated in 16.1.

16.3 When vulcanized fiber is used for insulating bushings, washers, separators, and barriers, it shall not be the sole support for uninsulated current-carrying parts of other than low-voltage circuits.

16.4 The thickness of a flat sheet of insulating material, such as impregnated asbestos-cement composition or phenolic composition employed for panel mounting of parts, shall not be less than the applicable value indicated in Table 16.1.

16.5 A terminal block mounted on a metal surface which is capable of being grounded shall be provided with an insulating barrier between the mounting surface and all live parts on the underside of the base to reduce the risk of the parts and the ends of replaceable terminal screws from reducing spacings below the minimum values required.

Exception: Such insulation is not required when the parts are staked, upset, sealed, or equivalently kept from loosening.

Table 16.1
Thickness of flat sheets of insulating material

Maximum dimensions				Minimum thickness,[a]	
Length or width,		Area,			
inches	(mm)	inches^2	(cm^2)	inch	(mm)
6	152	36	232.4	1/16	0.16
12	305	144	928.8	1/8	0.32
24	610	360	2322	3/8	9.5
48	1219	1152	7432	1/2	12.7
48	1219	1728	11148	5/8	15.9
Over 48	Over 1219	Over 1728	Over 11148	3/4	19.1

[a] Material less than the minimum thickness shown shall be used for a panel only when the panel is supported or reinforced to provide equivalent rigidity.

16.6 A countersunk sealed part shall be covered with a waterproof insulating compound which does not melt at a temperature 15°C (27°F) higher than the maximum intended operating temperature of the assembly, and not less than 65°C (149°F) in any case. The depth or thickness of sealing compound shall not be less than 1/8 inch (3.2 mm).

UL COPYRIGHTED MATERIAL –
NOT AUTHORIZED FOR FURTHER REPRODUCTION OR
DISTRIBUTION WITHOUT PERMISSION FROM UL
Documents
Document Sharing Hub

Copyright Underwriters Laboratories Inc.
Provided by IHS under license with UL
No reproduction or networking permitted without license from IHS
Full document details: UL 268 2006

Licensee=University of Texas Revised Sub Account/5620001114
Not for Resale, 07/03/2008 23:02:14 MDT

17 Lampholders and Lamps

17.1 Lampholders and lamps shall be rated for the circuit in which they are employed.

17.2 A lampholder employing a metal shell, such as a screw shell, used in a high-voltage circuit shall be wired so that the metal shell is connected to an identified (grounded circuit) conductor. When more than one lampholder of this type is provided, the metal shells of all such lampholders shall be connected to the same conductor.

17.3 A lampholder shall be installed so that uninsulated high-voltage live parts are not exposed to contact by persons removing or replacing lamps in service.

17.4 When more than one lamp is provided on the detector, a ″power-on″ lamp shall be white or green, an alarm indicating lamp shall be red, and a trouble lamp shall be amber or yellow. Other colors for the ″power-on″ lamp shall be used only when the lamp is marked to identify the function.

17.5 When two or more color indications are used to visually annunciate detector status, one color must be designated for normal indication and mode of operation. If the color for normal operation is other than white or green, the lamp shall be marked to identify the function. An alarm indication must be red. Use of alternative colors or indication flash rates for non-alarm conditions shall not be prohibited.

17.6 A lamp or equivalent means shall be provided on a spot-type detector head or base to identify it as the unit from which the alarm was initiated.

Exception: The alarm-indicating-means is not required on a detector whose use is restricted to a specific control unit that identifies the individual detector in alarm.

18 Photocell Illuminating Lamps

18.1 A limited life component such as an incandescent lamp, or a light emitting diode (LED) that is used as a light source of a smoke detector photocell light assembly, shall comply with the requirements specified in the Electrical Supervision Test, Section 30.

18.2 To be determined reliable, an LED shall have a predicted failure rate of less than 0.25 percent per 1000 hours (2.5 failures per million hours), and shall comply with the requirements specified in 30.3.3 and 30.3.4. In addition, the operating conditions of the LED in the detector circuit, as well as the LED and detector manufacturer's Quality Assurance (QA) Programs, are to be evaluated as to the level of reliability they provide.

18.3 A reliable LED that complies with the requirement specified in 18.3 shall additionally comply with the requirements specified in the Reduction in Light Output Test, Section 36, and the electrical supervision requirements described in 30.3.1 – 30.3.5.

UL COPYRIGHTED MATERIAL –
NOT AUTHORIZED FOR FURTHER REPRODUCTION OR
DISTRIBUTION WITHOUT PERMISSION FROM UL

Documents
Document Sharing Hub

Copyright Underwriters Laboratories Inc.
Provided by IHS under license with UL
No reproduction or networking permitted without license from IHS
Full document details: UL 268 2006

Licensee=University of Texas Revised Sub Account/5620001114
Not for Resale, 07/03/2008 23:02:14 MDT

19 Motors

19.1 A motor shall be protected against overheating under normal and abnormal operating conditions.

19.2 A fan motor shall be protected by thermal or overcurrent protective devices or shall be of the impedance-protected type. See the Locked Rotor Test, Section 58. A thermal or overcurrent protective device shall not open the circuit during the Temperature Test, Section 44.

19.3 A motor having openings in the enclosure or frame shall be arranged so that particles dropping out of the motor shall not fall onto flammable material within or under the detector.

20 Protective Devices

20.1 Fuseholders, fuses, and circuit breakers shall be rated for the application.

21 Printed Wiring Boards

21.1 Printed wiring boards shall comply with the Standard for Printed-Wiring Boards, UL 796. The components of a printed wiring board shall be attached securely and the spacings between circuits shall comply with the spacing requirements for rigidly clamped assemblies (see Table 27.1). The board shall be mounted so that deflection of the board during servicing shall not result in damage to the board or in a reduction of electrical spacings below those required in this standard.

22 Switches

22.1 A switch shall have a current and voltage rating not less than that of the circuit that it controls.

22.2 When a reset switch is provided, it shall be of a self-restoring type.

Exception: A non-self-restoring switch shall be employed only when a related audible trouble signal is to be obtained from the control unit to which the detector is connected, with the switch in the "off-normal" position.

23 Transformers and Coils

23.1 A transformer shall be of the two-coil or insulated type.

Exception: An autotransformer shall be used only when the terminal or lead connected to the autotransformer winding that is common to both input and output circuits is identified and the output circuits are located only within the enclosure containing the autotransformer. See 11.6.1 and 11.6.2.

23.2 The insulation of coil windings of relays, transformers, and other insulation, shall resist the absorption of moisture.

23.3 Film-coated or equivalently insulated wire does not require additional treatment to stop moisture absorption.

UL COPYRIGHTED MATERIAL –
NOT AUTHORIZED FOR FURTHER REPRODUCTION OR
DISTRIBUTION WITHOUT PERMISSION FROM UL

Documents
Document Sharing Hub

Copyright Underwriters Laboratories Inc.
Provided by IHS under license with UL
No reproduction or networking permitted without license from IHS
Full document details: UL 268 2006

Licensee=University of Texas Revised Sub Account/5620001114
Not for Resale, 07/03/2008 23:02:14 MDT

24 Dropping Resistors

24.1 A carbon composition resistor shall not be used as a dropping resistor in the high-voltage circuit of a detector.

25 Heat Detector

25.1 The temperature rating of a heat detector provided on a combination smoke and heat detector shall not be greater than 60°C (140°F), unless the smoke detector has been investigated and found appropriate for installation at a higher temperature.

26 Batteries

26.1 General

26.1.1 When a battery or set of batteries is employed as the main source of power for a smoke detector, it shall comply with the requirements of the Battery Tests, Section 68.

26.1.2 Batteries included as part of a detector shall be located and mounted to reduce the likelihood of terminals of cells coming in contact with uninsulated live parts, terminals or adjacent cells, or metal parts of the enclosure as a result of shifting.

26.1.3 A battery compartment intended for use with rechargeable batteries that emit gases during charging shall be provided with vent holes and a coating that is resistant to the corrosive action of the electrolyte.

26.1.4 Ready access shall be available to the battery compartment to facilitate battery replacement, without damage to the detector components, field wiring, or disassembly of any part of the detector, except for a cover or the equivalent.

26.1.5 Connections of external wiring to a battery-operated smoke detector, or to a portable accessory, shall not be subjected to stress or motion during battery replacement, servicing, or both. Removal of the detector or accessory from the mounting support to replace a battery or to service the unit is permitted only when the connected wiring is not subjected to flexing or stress.

UL COPYRIGHTED MATERIAL –
NOT AUTHORIZED FOR FURTHER REPRODUCTION OR
DISTRIBUTION WITHOUT PERMISSION FROM UL

Documents
Document Sharing Hub

Copyright Underwriters Laboratories Inc.
Provided by IHS under license with UL
No reproduction or networking permitted without license from IHS
Full document details: UL 268 2006

Licensee=University of Texas Revised Sub Account/5620001114
Not for Resale, 07/03/2008 23:02:14 MDT

26.2 Battery connections

26.2.1 A lead or terminal assembly connection to a battery shall be provided with strain relief and shall be identified with the proper polarity (plus or minus signs) unless the intended connection is determined by the terminal configuration. It is not prohibited for polarity to be indicated on the unit adjacent to the battery terminals or leads.

26.2.2 Connections to battery terminals shall be either by a lead terminating in a positive snap action type of clip, or a fixed butt type connection that applies a minimum of 1.5 pounds (6.6 N) force to each battery contact, or equivalent. The connection shall consist of an unplated or plated metal that is resistant to the corrosive action of the electrolyte.

26.2.3 Each lead of a clip-lead assembly employed as a part of a battery operated detector shall not be smaller than No. 26 AWG (0.21 mm^2) stranded wire, and the insulation shall not be less than 1/64 inch (0.4 mm) thick.

SPACINGS

27 General

27.1 Spacings shall be maintained between uninsulated live parts and dead metal parts and between uninsulated live parts of opposite polarity. The spacings shall not be less than those indicated in Table 27.1.

27.2 The spacings between an uninsulated live part and:

a) A wall or cover of a metal enclosure,

b) A fitting for conduit or metal-clad cable, and

c) Any dead-metal part

shall not be less than that indicated in Table 27.1.

27.3 The ″Through Air″ and ″Over Surface″ spacings of Table 27.1 measured at an individual component part are to be judged on the basis of the volt-amperes used and controlled by the individual component. However, the spacing from one component to another, and from any component to the enclosure or to other uninsulated dead metal parts, excluding the component mounting surface, shall be judged on the basis of the maximum voltage and total volt-ampere ratings of all components in the enclosure.

27.4 The spacing requirements specified in Table 27.1 do not apply to the inherent spacings inside motors, except at wiring terminals, nor to inherent spacings for a component provided as part of the detector. Such spacings are judged on the basis of the requirements for the component. The electrical clearance resulting from the assembly of a component into the complete device, including clearances to dead metal or enclosures, shall be as indicated in Table 27.1.

UL COPYRIGHTED MATERIAL –
NOT AUTHORIZED FOR FURTHER REPRODUCTION OR
DISTRIBUTION WITHOUT PERMISSION FROM UL
Documents
Document Sharing Hub

Copyright Underwriters Laboratories Inc.
Provided by IHS under license with UL
No reproduction or networking permitted without license from IHS
Full document details: UL 268 2006

Licensee=University of Texas Revised Sub Account/5620001114
Not for Resale, 07/03/2008 23:02:14 MDT

27.5 The ″To Walls of Enclosure″ spacings of Table 27.1 are not to be applied to an individual enclosure of a component part within an outer enclosure.

27.6 Film-coated or equivalently insulated wire is identified as an uninsulated live part. Enamel is capable of being used as turn-to-turn insulation in coils.

Table 27.1
Minimum spacings

Point of application	Voltage range	Minimum spacings[a,b]			
		Through air,		Over surface,	
		inch	(mm)	inch	(mm)
To walls of enclosure					
Cast metal enclosures	0 – 300	1/4	6.4	1/4	6.4
Sheet metal enclosures	0 – 300	1/2	12.7	1/2	12.7
Installation wiring terminals					
With barriers	0 – 30	1/8	3.2	3/16	4.8
	31 – 150	1/8	3.2	1/4	6.4
	151 – 300	1/4	6.4	3/8	9.5
Without barriers	0 – 30	3/16	4.8	3/16	4.8
	31 – 150	1/4	6.4	1/4	6.4
	151 – 300	1/4	6.4	3/8	9.5
Rigidly clamped assemblies[c]					
100 volt-amperes maximum[d,e]	0 – 30	1/32	0.8	1/32	0.8
Over 100 volt-amperes[e]	0 – 30	3/64	1.2	3/64	1.2
	31 – 150	1/16	1.6	1/16	1.6
	151 – 300	3/32	2.4	3/32	2.4
Other parts	0 – 30	1/16	1.6	1/8	3.2
	31 – 150	1/8	3.2	1/4	6.4
	151 – 300	1/4	6.4	3/8	9.5

[a] An insulating liner or barrier of vulcanized fiber, varnished cloth, mica, phenolic composition, or similar material employed where spacings are otherwise insufficient shall not be less than 0.028 (0.71 mm) thick. When a liner or barrier is used which is less than 0.028 inch, and not less than 0.013 inch (0.33 mm) thick, it shall be used in conjunction with an air spacing of not less than one-half of the through air spacing required. The liner shall be located so that it is not affected adversely by arcing. When insulating material having a thickness of less than that specified is used, it shall be found to be appropriate for the particular application.

[b] Measurements are to be made with solid wire of an ampacity that is intended for the applied load connected to each terminal. In no case is the wire to be smaller than No. 16 AWG (1.3 mm^2).

[c] Rigidly clamped assemblies include such parts as contact springs on relays or cam switches and printed wiring boards.

[d] Spacings less than those indicated, and not less than 1/64 inch (0.4 mm), are appropriate for the connection of integrated circuits and similar components where the spacing between adjacent connecting wires on the component is less than 1/32 inch (0.8 mm).

[e] When spacings between traces on a printed wiring board are less than the minimum specified the boards shall be covered with a conformal coating, and the combination shall be evaluated to the requirements in Conformal Coatings of Printed Wiring Boards, Section 69.

UL COPYRIGHTED MATERIAL –
NOT AUTHORIZED FOR FURTHER REPRODUCTION OR
DISTRIBUTION WITHOUT PERMISSION FROM UL

Documents
Document Sharing Hub

Copyright Underwriters Laboratories Inc.
Provided by IHS under license with UL
No reproduction or networking permitted without license from IHS
Full document details: UL 268 2006

Licensee=University of Texas Revised Sub Account/5620001114
Not for Resale, 07/03/2008 23:02:14 MDT

PERFORMANCE

28 General

28.1 Test units and data

28.1.1 Detectors that are fully representative of production units are to be used for the tests specified in Sections 29 – 69, unless otherwise specified. The sensitivity setting or range of sensitivities provided on the units for test define the production sensitivity.

28.1.2 The devices employed for testing are to be those specified by the wiring diagram of the detector. When substitute devices are used, they shall produce functions and load conditions equivalent to those obtained with the devices intended to be used with the detector in service.

28.2 Test voltages

28.2.1 Unless otherwise specified, the test voltage for each test shall be as specified in Table 28.1 and at rated frequency.

Table 28.1
Test voltages

Nameplate voltage rating[a]	Test voltage[b]
110 to 120	120
220 to 240	240
Other	Marked nameplate rating

[a] The voltage rating shall be applied at the voltage waveform(s) specified in the markings. See 74.1 (c).
[b] Detectors rated at frequencies other than 60 hertz are to be tested at their rated nameplate voltage and frequency.

28.3 Test samples and data

28.3.1 The following samples and data are required. The data required in (g) and (h) does not have to be in final printed form.

a) At least 28 assembled spot type detectors, 12 preset (as close as intended production calibration permits) to the nominal maximum production sensitivity (most sensitive setting), and 16 preset (as close as intended production calibration permits) to the nominal minimum anticipated production sensitivity (least sensitive setting). Four of the 12 units preset to the maximum sensitivity and four of the 16 preset to the minimum sensitivity shall be calibrated so that the sensitivity of any individual unit does not vary more than 25 percent from any other unit in each setting, and shall establish the maximum and minimum sensitivities to be employed in production. Combination smoke detectors are to be provided with means for monitoring each principle of operation during the Sensitivity Test, Section 31.

b) One additional unassembled spot type detector.

c) Six photocell and light assemblies of a projected beam type detector.

d) Three control units, or three power supplies, or both, when the detectors are intended to be employed only with a specific unit or power supply.

UL COPYRIGHTED MATERIAL –
NOT AUTHORIZED FOR FURTHER REPRODUCTION OR
DISTRIBUTION WITHOUT PERMISSION FROM UL
Documents
Document Sharing Hub

Copyright Underwriters Laboratories Inc.
Provided by IHS under license with UL
No reproduction or networking permitted without license from IHS
Full document details: UL 268 2006

Licensee=University of Texas Revised Sub Account/5620001114
Not for Resale, 07/03/2008 23:02:14 MDT

e) Three additional samples of detectors that operate on the photoelectric principle, provided with means to reduce the light output as described in 36.2.

f) The monitoring instrument, or reference to a readily available instrument, intended to monitor the sensitivity of the detector.

g) Installation wiring diagram and operating instructions. At least two detectors shall be shown connected in the installation wiring diagram. See 5.1 and 5.2, and Installation Instructions–Wiring Diagram, Section 76.

h) Copy of the Technical Bulletin. See Technical Bulletin, Section 77.

28.4 Component reliability data

28.4.1 Data on detector components, for example, capacitors, resistors, and solid-state devices, shall be provided for evaluation of the components for the intended application. When a Mil-Spec. is referenced, a copy of the specification is to be provided for review.

28.4.2 The data required by 28.4.1 shall include the following or equivalent information:

a) General description of the detector manufacturer's quality assurance (QA) program. This data shall include incoming inspection and screening, in-process quality assurance, burn-in data, and testing. This applies to complete and partial assemblies as well as individual components.

b) Component Fault Analysis. Effect of failure, open and short, of capacitors and limited life components on operation of a detector.

c) Maximum supplier's ratings for each component as well as the actual maximum operating values (voltage and current) in the detectors.

d) A description of component screening and burn-in test data for solid-state devices or integrated circuits that operate at greater than the limits described in note b of Table 44.1.

e) General calibration procedure of test instruments employed by the manufacturer in the calibration of a detector.

f) A general description of the circuit operation under standby, alarm, and trouble conditions.

g) For a detector employing a reliable LED as the photocell illuminating light source the data specified in the Overload Tests, Section 54.

UL COPYRIGHTED MATERIAL –
NOT AUTHORIZED FOR FURTHER REPRODUCTION OR
DISTRIBUTION WITHOUT PERMISSION FROM UL
Documents
Document Sharing Hub
Copyright Underwriters Laboratories Inc.
Provided by IHS under license with UL
No reproduction or networking permitted without license from IHS
Licensee=University of Texas Revised Sub Account/5620001114
Not for Resale, 07/03/2008 23:02:14 MDT
Full document details: UL 268 2006

28.5 Remote accessories

28.5.1 Unless specifically indicated otherwise, the performance requirements for a detector shall also apply to any remote accessories with which it is to be employed.

28.6 Detector guards

28.6.1 Mechanical detector guards for use in providing physical protection to an installed smoke detector are to be subjected to the following tests (in conjunction with the smoke detector) as applicable:

a) Normal Operation Test (Section 29);

b) Sensitivity Test (Section 31);

c) Velocity-Sensitivity Test (Section 33);

d) Reduction in Light Output Test (Section 36);

e) Fire Tests (Section 39);

f) Smoldering Smoke Test (Section 40); and

g) Audibility Test (Section 67).

29 Normal Operation Test

29.1 General

29.1.1 A detector shall operate for all conditions of its intended performance, at all sensitivity settings, when used in conjunction with any related power supply or control unit with which it is intended to be employed, and with indicating devices used to form the system combination covered both by the installation wiring diagram and by any supplementary information provided.

29.1.2 The test voltage is to be in accordance with 28.2.1 and the detector is to be in the standby condition and prepared for its intended signaling operation when it is connected to related devices and circuits.

29.1.3 The introduction of smoke into the detector chamber, such as from a smoldering cotton lamp wick, shall result in the operation of the detector in its intended manner, and the means incorporated to identify the initiation of an alarm shall remain activated after the smoke has dissipated from within the detector.

29.1.4 When a heat detector is provided integral with a smoke detector, actuation of the heat detector shall result in the same type of alarm signal as when actuated by smoke.

29.1.5 Neither principle of operation of a combination smoke detector shall be rendered inoperative by any of the Performance Tests (Sections 29 – 69) of this standard. A circuit analysis is to be made, supplemented by electrical measurement when required, to determine that both principles of operation contribute to detector operation.

UL COPYRIGHTED MATERIAL –
NOT AUTHORIZED FOR FURTHER REPRODUCTION OR
DISTRIBUTION WITHOUT PERMISSION FROM UL

Documents
Document Sharing Hub

Copyright Underwriters Laboratories Inc.
Provided by IHS under license with UL
No reproduction or networking permitted without license from IHS
Full document details: UL 268 2006

Licensee=University of Texas Revised Sub Account/5620001114
Not for Resale, 07/03/2008 23:02:14 MDT

29.1.6 When an audible alarm signaling appliance is provided integral with a smoke detector, the alarm shall be energized by any one of the following conditions:

a) Operation of the test means,

b) Introduction of an abnormal amount of smoke, or

c) Reception of an alarm signal from the connected control unit.

29.2 Standardized alarm signal

29.2.1 A detector that produces an audible signal which is intended to initiate immediate evacuation from the protected area, shall produce the signal in the form of the ″three pulse″ temporal pattern shown in Figure 29.1. Each ON phase shall last 0.5 second ±10 percent followed by an OFF phase of 0.5 second±10 percent. After the third of these ON phases, there shall be an OFF phase that lasts 1.5 seconds ±10 percent. Where the intended action is not immediate evacuation, the audible signal shall produce an alert signal distinctive from the ″three pulse″ temporal system.

29.3 Sensitivity shift criteria

29.3.1 During or immediately after performance tests, the sensitivity of the detectors shall not vary more than ±1 percent per foot obscuration (0.014 optical density per meter) from the value recorded prior to the test. In no circumstance shall the sensitivity of a detector shift outside the sensitivity limits as specified in 31.1.1.

Figure 29.1
Standardized alarm signal temporal pattern

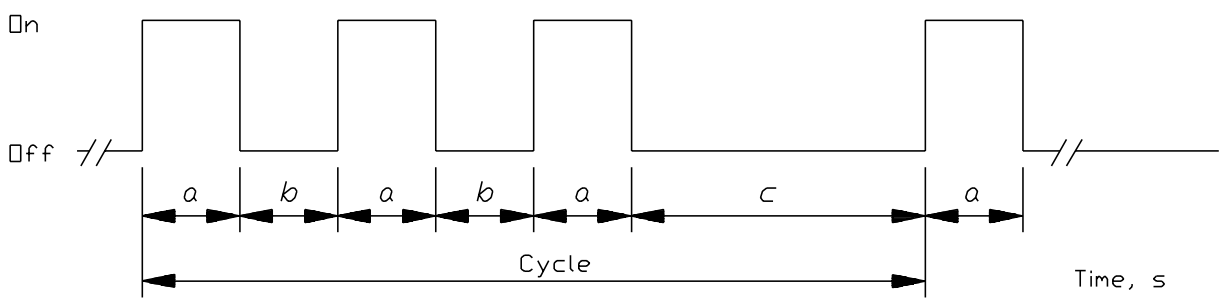

Key

Phase *a* signal is ″on″ for 0.5 s ± 10 %
Phase *b* signal is ″off″ for 0.5 s ± 10 %
Phase *c* signal is ″off″ for 1.5 s ± 10 % (c = a + 2b)
Total cycle lasts for: 4 s ± 10 %

SM832

UL COPYRIGHTED MATERIAL –
NOT AUTHORIZED FOR FURTHER REPRODUCTION OR
DISTRIBUTION WITHOUT PERMISSION FROM UL
Documents
Document Sharing Hub

Copyright Underwriters Laboratories Inc.
Provided by IHS under license with UL
No reproduction or networking permitted without license from IHS
Full document details: UL 268 2006

Licensee=University of Texas Revised Sub Account/5620001114
Not for Resale, 07/03/2008 23:02:14 MDT