UL 2703

STANDARD FOR SAFETY

Mounting Systems, Mounting Devices, Clamping/Retention Devices, and Ground Lugs for Use with Flat-Plate Photovoltaic Modules and Panels

Documents
Document Sharing Hub

Full document details: UL 2703 2021

Documents
Document Sharing Hub

Full document details: UL 2703 2021

UL Standard for Safety for Mounting Systems, Mounting Devices, Clamping/Retention Devices, and Ground Lugs for Use with Flat-Plate Photovoltaic Modules and Panels, UL 2703

First Edition, Dated January 28, 2015

SUMMARY OF TOPICS

This revision of ANSI/UL 2703 dated March 24, 2021 includes the following changes in requirements:

Clarification to Bonding and Grounding Requirements Related to Module Removal in 9.1, 9.2 and 26.10

Addition of a New Note to 22.1 for Clarification of the Bonding Conductor Test

Modification of Moist Carbon Dioxide/Sulphur Dioxide Test; 19.2.1

Text that has been changed in any manner or impacted by UL's electronic publishing system is marked with a vertical line in the margin.

The new and revised requirements are substantially in accordance with Proposal(s) on this subject dated November 27, 2020, January 8, 2021 and February 19, 2021.

All rights reserved. No part of this publication may be reproduced, stored in a retrieval system, or transmitted in any form by any means, electronic, mechanical photocopying, recording, or otherwise without prior permission of UL.

UL provides this Standard "as is" without warranty of any kind, either expressed or implied, including but not limited to, the implied warranties of merchantability or fitness for any purpose.

In no event will UL be liable for any special, incidental, consequential, indirect or similar damages, including loss of profits, lost savings, loss of data, or any other damages arising out of the use of or the inability to use this Standard, even if UL or an authorized UL representative has been advised of the possibility of such damage. In no event shall UL's liability for any damage ever exceed the price paid for this Standard, regardless of the form of the claim.

Users of the electronic versions of UL's Standards for Safety agree to defend, indemnify, and hold UL harmless from and against any loss, expense, liability, damage, claim, or judgment (including reasonable attorney's fees) resulting from any error or deviation introduced while purchaser is storing an electronic Standard on the purchaser's computer system.

Documents
Document Sharing Hub

Full document details: UL 2703 2021

No Text on This Page

Documents
Document Sharing Hub

Full document details: UL 2703 2021

JANUARY 28, 2015
(Title Page Reprinted: March 24, 2021)

ANSI/UL 2703-2021

UL 2703

Standard for Mounting Systems, Mounting Devices, Clamping/Retention Devices, and Ground Lugs for Use with Flat-Plate Photovoltaic Modules and Panels

First Edition

January 28, 2015

This ANSI/UL Standard for Safety consists of the First Edition including revisions through March 24, 2021.

The most recent designation of ANSI/UL 2703 as an American National Standard (ANSI) occurred on March 23, 2021. ANSI approval for a standard does not include the Cover Page, Transmittal Pages, and Title Page.

Comments or proposals for revisions on any part of the Standard may be submitted to UL at any time. Proposals should be submitted via a Proposal Request in UL's On-Line Collaborative Standards Development System (CSDS) at https://csds.ul.com.

UL's Standards for Safety are copyrighted by UL. Neither a printed nor electronic copy of a Standard should be altered in any way. All of UL's Standards and all copyrights, ownerships, and rights regarding those Standards shall remain the sole and exclusive property of UL.

COPYRIGHT © 2021 UNDERWRITERS LABORATORIES INC.

Documents
Document Sharing Hub

Full document details: UL 2703 2021

No Text on This Page

Documents
Document Sharing Hub

Full document details: UL 2703 2021

CONTENTS

INTRODUCTION

1 Scope 5
2 Glossary 5
3 Units of measurement 10
4 Components 10
5 Undated References 11

CONSTRUCTION

6 General 11
7 Polymeric Materials 16
8 Grounding and Grounding Devices 18
9 Bonding 18
10 Corrosion Resistance 22
11 Fire Resistance 23

PERFORMANCE

12 General 24
13 Bonding Path Resistance Test 25
14 Terminal Torque Test 25
15 System Fire Class Rating of Mounting Systems with Modules or Panels in Combination with Roof Coverings 25
15.1 General 25
15.2 Spread-of-flame tests 29
15.3 Burning-brand tests for steep sloped mounting systems 40
15.4 Recording 42
16 Accelerated Aging Test 42
17 Temperature Cycling Test 43
18 Humidity Test 44
19 Corrosive Atmosphere Tests 45
19.1 Salt spray test 45
19.2 Moist carbon dioxide/sulphur dioxide test 46
20 Metallic Coating Thickness Test 47
21 Mechanical Loading Test 49
22 Bonding Conductor Test 51
23 Bonding Strap Pull Test (Only for flat bonding straps with flat end terminations/crimps) 53

RATINGS

24 Details 53

MARKINGS

25 Details 54

INSTRUCTIONS

26 Installation, Assembly and Maintenance/Inspection Instructions 54

APPENDIX A Standards for Components

Documents
Document Sharing Hub
Full document details: UL 2703 2021

APPENDIX B Retest Guidelines (Informative)

APPENDIX C Examples (Informative)

Documents
Document Sharing Hub

Full document details: UL 2703 2021

INTRODUCTION

1 Scope

1.1 These requirements cover rack mounting systems, mounting grounding/bonding devices, and clamping/retention devices for specific (manufacturer/model designation) flat-plate photovoltaic modules and panels that comply with the Standard for Flat-Plate Photovoltaic Modules and Panels, UL 1703, or the Standard for Photovoltaic (PV) Module Safety Qualification – Part 1: Requirements For Construction, UL 61730-1 and the Standard for Photovoltaic (PV) Module Safety Qualification – Part 2: Requirements For Testing, UL 61730-2, intended for installation on or integral with buildings, or to be freestanding (i.e., not attached to buildings), in accordance with the National Electrical Code, ANSI/NFPA 70 and Model Building Codes. Systems, components and/or devices evaluated under this standard may be used to ground and/or mount a PV module complying with UL 1703 or UL 61730-1 and UL 61730-2 when the specific module or frame has been evaluated for bonding/grounding or the module has been evaluated for mounting with the evaluated system, component or device.

1.2 These requirements cover rack mounting systems and clamping devices intended for use with photovoltaic module systems with a maximum system voltage of 1500 V.

1.3 These requirements cover rack mounting systems, clamping, retention devices pertaining to ground/bonding paths, mechanical strength, and suitability of materials only.

1.4 These requirements do not cover:

a) Equipment intended to accept the electrical output from the array, such as power conditioning units (inverters) and batteries.

b) Solar trackers or tracker mechanisms (except as specifically directed as to be utilized by the Outline of Investigation for Solar Trackers, UL 3703 and in combination with UL 3703).

c) Cell assemblies intended to operate under concentrated sunlight.

d) Optical concentrators.

e) Combination photovoltaic-thermal modules or panels.

f) Equipment intended to carry current as a normal function of that component, such as combiner boxes, connection boxes (other than connection box for grounding), wireways and enclosures housing live parts. See the Standard for Flat-Plate Photovoltaic Modules and Panels, UL 1703 or the Standard for Photovoltaic (PV) Module Safety Qualification – Part 1: Requirements For Construction, UL 61730-1, or the Standard for Inverters, Converters, Controllers and Interconnection System Equipment for Use With Distributed Energy Resources, UL 1741.

g) Ground rods and ground rod accessories.

h) The mechanical and structural requirements of the international building code. See (i).

Note: The IBC and other model codes may have additional requirements. As an example, compliance with the IBC will require development load combinations which include dead, snow, wind and seismic forces using ASCE 7. These loads will need to be applied in three orthogonal directions and the load resisting elements of the system will be required to adequately support the applied loads.

i) Roof attachments for above roof mounting.

2 Glossary

2.1 For the purpose of this standard, the following definitions apply.

Documents
Document Sharing Hub

Full document details: UL 2703 2021

2.2 ACCESSIBLE – A part is considered accessible if, in a fully assembled rack mounting system (that is, with all covers in place) the part may be touched by the probe illustrated in Figure 2.1. A cover that may be removed without the use of a tool is to be removed for purposes of this requirement. A cover that may be removed (with or without a tool) for routine maintenance such as cleaning, or to gain access to tools, is to be removed for purposes of this requirement. The probe illustrated in Figure 2.1 shall be applied to up to any depth that the opening will permit, up to a maximum of 35 inches; and shall be rotated or angled before, during, and after insertion through the opening to any position that is necessary to examine the product. The probe shall be applied in any possible configuration; and, if necessary, the configuration shall be changed after insertion through the opening. The probe is to be used as a measuring instrument to judge the accessibility provided by an opening, and not as an instrument to judge the strength of a material; as such, it is to be applied with the minimum force necessary to accurately determine accessibility.

Figure 2.1

Probe for determining accessibility of live parts

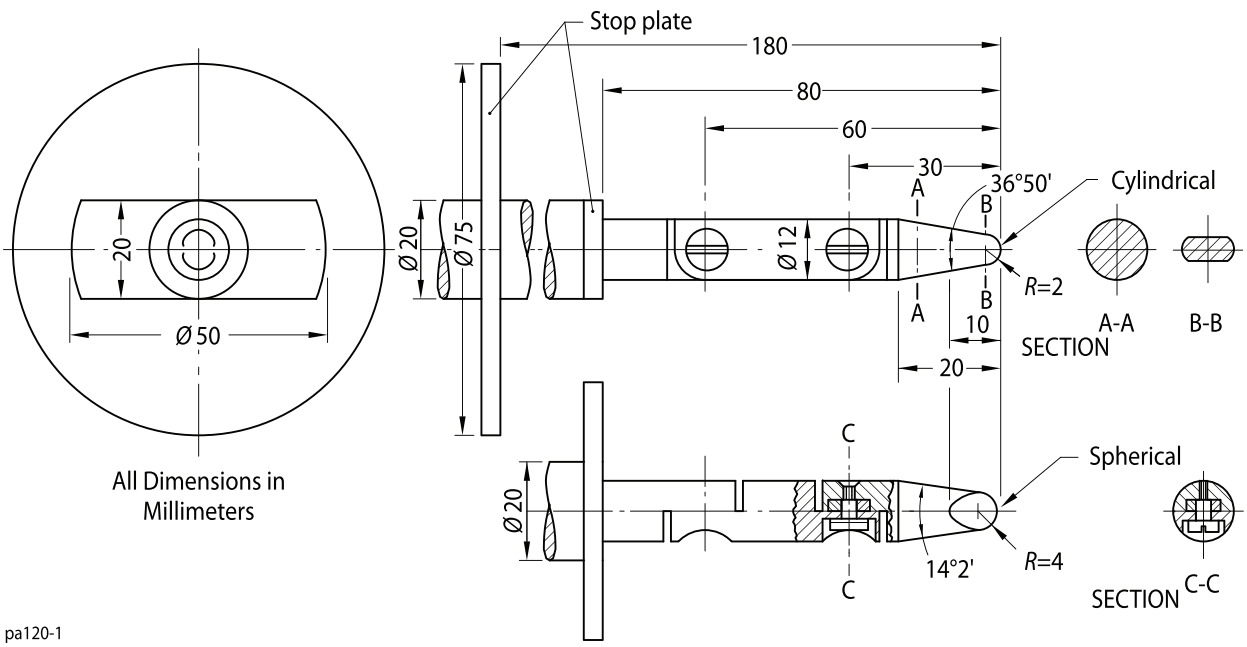

2.3 AC MODULE – The smallest complete unit that includes solar cells, optics, inverters, and other components, excluding tracking devices, intended to generate ac power from sunlight.

2.4 ABOVE ROOF MOUNTING (including rack-mounted style installations) – Installations that are spaced away from the building's roof member.

2.5 ARRAY – A mechanically-integrated assembly of modules or panels with a support structure and foundation, tracking, thermal control, and other components, if used, to form a power-producing unit.

2.6 BOLT – A type of fastener. For the purposes of this document the requirements for “cap screws” will apply to bolts as well. See cap screw, 2.11.

Documents
Document Sharing Hub
Full document details: UL 2703 2021

2.7 BONDING – Electrically connecting all metal components to the point of the equipment ground conductor.

2.8 BONDING DEVICE – A device for bonding and may include a function to pierce non-conductive coatings such as but not limited to; anodization, paint, vitreous enamel, and may be a separate piercing device or integral to the component to perform the bonding function.

a) SINGLE USE BONDING DEVICES – Bonding device intended for use one time only.

b) MULTIPLE USE BONDING DEVICE – Bonding device intended for multiple use according to the device's installation instructions.

2.9 BONDING STRAP – A solid, multi-strand or braided copper, copper-clad aluminum or aluminum conductor (and may be tin or zinc plated) with factory crimped terminations to allow bonding of components.

2.10 CELL – The basic photovoltaic device that generates electricity when exposed to sunlight.

2.11 CAP SCREW – A threaded fastener which is utilized with a threaded nut or internal threads in a material, to provide a clamp load on the mechanical joint being fastened. Cap screws are most typically hex head, but include socket head, button head, and other types. See ASTM F593, ASTM F837, and for illustrations of these and other types of cap screws, see ANSI/ASME B18.2.1 and ANSI/ASME B18.3.

2.12 CLAMP LOAD – The force exerted on a fastened joint by a fastener, such as a cap screw. To minimize fatigue failures, the clamp load of a fastener, such as a cap screw and hex nut, must exceed the force exerted on the fastener by the fastened joint.

2.13 CLAMPING DEVICE(S) – A mechanical means to secure a PV module to the rack mounting system which does not rely upon the mounting holes in the PV module's frame. These clamping devices are typically, but not limited to, top-down clamps. The clamping device may also function as a bonding device where specified. Top down end-clamps are assumed to be cantilever design, where the fastener securement is approximately at the mid-point between the PV module and the clamps' contact with the supporting structure. Also see Retention Device.

2.14 CYCLIC LOADING – The non-static (changing) forces that act upon a body; for the purposes of this standard, the changing loads that act upon the fastened joint (i.e., changing wind loads that will force a PV module to act against the clamping device which is securing the PV module in place).

2.15 DIRECT ROOF MOUNTING – PV modules which are direct-mounted; placed upon the building's waterproof membrane/shingles or the like.

2.16 ELECTRIC SHOCK – A risk of electric shock is considered to exist at a part if the potential between the part and earth ground or any other accessible part is more than 30 Vdc and the leakage current exceeds the values specified in the following table:

Surface or part from which measurement is made	Maximum current (dc)
Accessible conductive frame, pan, or the like	10 μA

2.17 FACTORY INSTALLED – The connection of a device under controlled factory conditions at the manufacturer's location(s).

Documents
Document Sharing Hub
Full document details: UL 2703 2021

2.18 FASTENER (threaded fastener) – A mechanical device designed specifically to hold, join, couple, or assemble two or more components together. Examples of fastener types include cap screws, machine screws, and bolts.

2.19 FIELD INSTALLED – The connection of a device, which is made in the field by an installer.

2.20 GROUNDING LUG – A device used to provide a ground path between an object (e.g., PV module frame or racking system) and a grounding electrode conductor or equipment grounding conductor; the device provides an equipotential-bonded connection.

2.20A GUARDED PERIMETER – A perimeter that is protected with wire screen or other similar means including sheet metal.

2.21 INTERCONNECT – A conductor within a module that provides a mechanism for conducting electricity between cells.

2.22 LIKELY TO BE ENERGIZED – Any conductive component that may come into contact with a live part under normal operating or single fault conditions. Conductive components of rack mounting systems that enclose electrical circuits or otherwise act as an electrical enclosure, conductive components that are not physically separated from potentially live insulated or non-insulated wires or conductors, conductive components not electrically isolated from other conductive components that are likely to be energized.

2.23 MACHINE SCREW – A machine screw is a fastener defined by ASME B18.6.3 meeting UN or UNR requirements such as UNC, UNF, and UNS thread types defined by ASME B1.1 as well as the M series metric screws defined by ASME B1.13M. There are thread cutting and self-drilling tapping machine screws. Examples of thread cutting screws include Types, D, F, G, T, 1, 23 as defined by ASME B18.6.3. Examples of self-drilling tapping machine screws include CSD screws as defined by SAE J78. These screws have UN style threads with a drill point for creating the pilot hole for the screw.

Thread-Cutting Machine Screw

Self-Drilling Tapping Machine Screw

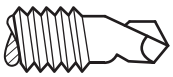

2.24 MAXIMUM POWER (P_{max}) – The point on the current-versus-voltage curve of a module, at standard test conditions (STC), where the product of current and voltage is maximum.

2.25 MAXIMUM SYSTEM VOLTAGE – The sum of the maximum open-circuit voltages of the maximum number of modules or panels to be connected in series in a system at 1000W/m^2, AM 1.5 spectrum and corrected for the lowest expected ambient temperature.

2.26 MODULE (FLAT-PLATE) – The smallest environmentally protected, essentially planar assembly of solar cells and ancillary parts, such as interconnects and terminals, intended to generate dc power under non-concentrated sunlight. The structural (load-carrying) member of a module can either be the top layer (superstrate), or the back layer (substrate), in which:

AVA Documents
Document Sharing Hub
Full document details: UL 2703 2021

a) The superstrate is the transparent material forming the top (light-facing) outer surface of the module. If load-carrying, this constitutes a structural superstrate.

b) The substrate is the material forming the back outer surface of a module. If load-carrying, this constitutes a structural substrate.

2.26.1 MODULE LEVEL POWER ELECTRONIC (MLPE) DEVICE – Device that performs module level electrical control and/or monitoring, which could be connected to PV module frame or racking system.

2.27 MODULE MOUNTING MEANS – A device or combination of devices used to mechanically secure a PV module to a rack. Part of the module mounting means may be integrated into the module frame and/or rack.

2.28 NON-SEPARATELY DERIVED – Photovoltaic systems that have direct electrical connection to another source, such as PV systems that connect to the grid via a grid interactive inverter.

2.29 PANEL (FLAT-PLATE) – A collection of modules mechanically fastened together, wired, and designed to provide a field-installable unit.

2.30 PANEL MOUNTING CLIP (framed modules) – A mechanical means to secure a PV module to the rack mounting system which does not necessarily rely upon the mounting holes in the PV modules frame (but may use such for alignment) and may not be secured with a threaded fastener and may include a bonding function.

2.31 PANEL MOUNTING CLIP (un-framed modules) – A mechanical means to secure a PV module to the rack mounting system and may not be secured with a threaded fastener, and may include a bonding function.

2.32 PROOF LOAD – A tensile load that the fastener must support without evidence of permanent deformation.

2.33 RACK – A structure used to support the PV modules.

2.34 RACK MOUNTING MEANS – Device or combination of devices used to mechanically secure a rack to a building structure or ground.

2.35 RACK MOUNTING SYSTEM – A complete system used to mechanically secure and support one or more PV modules and that is affixed to a structure or ground and includes module mounting means, rack mounting means, and racks.

2.36 RACK MOUNTING SYSTEM ACCESSORIES – Devices that do not act as nor supplement support for the PV module or mechanical securement of the PV module to the rack or mechanical securement of the rack to a structure or ground.

2.37 RATED OPERATING VOLTAGE – The voltage, ±10 percent, at which maximum power is available from the module or panel under standard test conditions (STC).

2.38 RETENTION DEVICE – A device which retains a PV module, such as, but not limited to a U-channel rail and where applicable the requirements pertaining to clamping devices may also apply to the retention devices.

2.38A ROOF ATTACHMENT – The mechanical connection (e. g., fasteners, U-bolts, adhesives, etc.) between the mounting system or mounting device and the roof system.

AVA Documents
Document Sharing Hub

Full document details: UL 2703 2021

2.39 SHEAR LOADING – A load applied parallel to the cross-section of the material.

2.39.1 SHEET METAL SCREW – A thread forming or thread cutting screw with spaced threads which allow for material displacement during threading. The threads per inch for sheet metal screws are less than those for machine screws (UNC, UNF, or M as defined by ASME B1.1 and ASME B1.13M). Examples of sheet metal screws include Type A, AB, ABR, B, BP, BF, BT and 25 as defined by ASME B18.6.3.

Sheet Metal Screw with Spaced Threads

2.39.2 SINGLE FAULT CONDITION – Condition in which one means for protection against a hazard is defective or one fault is present which could cause a hazard. If a single fault condition results in other subsequent failures, the set of failures is considered as one single fault condition.

2.40 STAINLESS STEEL (300 SERIES) – Stainless steel in the AISI 300 series.

2.41 STANDARD TEST CONDITIONS (STC) – Test conditions consisting of:

a) 100 mW/cm^2 irradiance,

b) AM 1.5 spectrum, and

c) 25°C cell temperature.

2.42 TERMINAL CONNECTOR – Establishes a connection between one or more conductors to a terminal plate or stud, or to any similar device, by means of mechanical pressure.

2.43 TORQUE – The tendency of a force to rotate an object; the cross product of the lever arm and force. For the purposes of this standard, refers to the rotational force applied to a threaded fastener to obtain a desired clamp load.

2.44 ULTIMATE TENSILE STRENGTH – The maximum engineering stress a material can withstand while being stretched or pulled before failing or breaking. Ultimate tensile strength is sometimes referred to simply as tensile strength.

2.45 UNCONDITIONED MODULES OR SAMPLES – Modules or samples that have not been previously subjected to tests or environmental exposures.

2.46 *Deleted*

3 Units of measurement

3.1 Values stated without parentheses are the requirement. Values in parentheses are explanatory or approximate information.

4 Components

4.1 Except as indicated in this clause, a component of a product covered by this standard shall comply with the requirements for that component. See the Standards for Components appendix for a list of standards covering components generally used in the products covered by this standard.

Documents
Document Sharing Hub
Full document details: UL 2703 2021

4.2 A component is not required to comply with a specific requirement that:

a) Involves a feature or characteristic not required in the application of the component in the product covered by this standard, or

b) Is superseded by a requirement in this standard.

4.3 A component shall be used in accordance with its rating established for the intended conditions of use.

4.4 Specific components are incomplete in construction features or restricted in performance capabilities. Such components are intended for use only under limited conditions, such as certain temperatures not exceeding specified limits, and shall be used only under those specific conditions.

5 Undated References

5.1 Any undated reference to a code or standard appearing in the requirements of this standard shall be interpreted as referring to the latest edition of that code or standard.

CONSTRUCTION

6 General

6.1 Rack mounting system and all components shall be designed with suitable materials and at sufficient material thickness for structural integrity for the loads the rack system will be subject. Materials shall also have suitable corrosion resistance (see Section 10). Any dissimilar metals that significantly contribute to galvanic corrosion shall not be utilized. The electrochemical potentials table of Figure 6.1 shows various common metal combinations. Combinations below the table cutoff line, 0.6 V or less, are considered to be acceptable. Inherently, corrosion resistant metals that are not dissimilar, for example an austenitic stainless steel fastener used on an austenitic stainless steel clamp, are not subject this requirement.

Exception No. 1: For the combination of austenitic stainless steel (i.e. 300-series stainless steel) and zinc galvanized material; if the immediate adjacent area of materials zinc galvanized to austenitic stainless steel is greater than 2:1, the galvanic potential may be considered as 0.6 V.

Exception No. 2: 5000 and 6000 series aluminum alloys are considered Al/Mg alloy (although some in these series of alloys may contain additional alloying elements). For example, an austenitic stainless steel fastener used with 5000 series aluminum rail would be 0.55 V in Figure 6.1.

Documents
Document Sharing Hub

Full document details: UL 2703 2021

Figure 6.1

Electrochemical potentials

	Magnesium, magnesium alloys	Zinc, zinc alloys	80 tin/20 Zn on steel, Zn on iron or steel	Aluminium	Cd on steel	Al/Mg alloy	Mild steel	Duralumin	Lead	Cr on steel, soft solder	Cr on Ni on steel, tin on steel, 12% Cr stainless steel	High Cr stainless steel	Copper, copper alloys	Silver solder, austenitic stainless steel	Ni on steel	Silver	Rh on Ag on Cu, silver/gold alloy	Carbon	Gold, platinum
Magnesium, magnesium alloys	0	0.05	0.55	0.7	0.8	0.85	0.9	1.0	1.05	1.1	1.15	1.25	1.35	1.4	1.45	1.6	1.65	1.7	1.75
Zinc, zinc alloys		0	0.05	0.2	0.3	0.35	0.4	0.5	0.55	0.6	0.65	0.75	0.85	0.9	0.95	1.1	1.15	1.2	1.25
80 tin/20 Zn on steel, Zn on iron or steel			0	0.15	0.25	0.3	0.35	0.45	0.5	0.55	0.6	0.7	0.8	0.85	0.9	1.05	1.1	1.15	1.2
Aluminium				0	0.1	0.15	0.2	0.3	0.35	0.4	0.45	0.55	0.65	0.7	0.75	0.9	0.95	1.0	1.05
Cd on steel					0	0.05	0.1	0.2	0.25	0.3	0.35	0.45	0.55	0.6	0.65	0.8	0.85	0.9	0.95
Al/Mg alloy						0	0.05	0.15	0.2	0.25	0.3	0.4	0.5	0.55	0.6	0.75	0.8	0.85	0.9
Mild steel							0	0.1	0.15	0.2	0.25	0.35	0.45	0.5	0.55	0.7	0.75	0.8	0.85
Duralumin								0	0.05	0.1	0.15	0.25	0.35	0.4	0.45	0.6	0.65	0.7	0.75
Lead									0	0.05	0.1	0.2	0.3	0.35	0.4	0.55	0.6	0.66	0.7
Cr on steel, soft solder										0	0.05	0.15	0.25	0.3	0.35	0.5	0.55	0.6	0.65
Cr on Ni on steel, tin on steel, 12% Cr stainless steel											0	0.1	0.2	0.25	0.3	0.45	0.5	0.55	0.6
High Cr stainless steel												0	0.1	0.15	0.2	0.35	0.4	0.45	0.5
Copper, copper alloys													0	0.05	0.1	0.25	0.3	0.35	0.4
Silver solder, austenitic stainless steel														0	0.05	0.2	0.25	0.3	0.35
Ni on steel															0	0.15	0.2	0.25	0.3
Silver																0	0.05	0.1	0.15
Rh on Ag on Cu, silver/gold alloy																	0	0.05	0.1
Carbon																		0	0.05
Gold, platinum																			0

Ag = Silver
Al = Aluminium
Cr = Chromium
Cd = Cadmium
Cu = Copper
Mg = Magnesium
Ni = Nickel
Rh = Rhodium
Zn = Zinc

NOTE. – Corrosion due to electrochemical action between dissimilar metals which are in contact is minimized if the combined electrochemical potential is below about 0.6V. In the following table the combined electrochemical potentials are listed for a number of pairs of metals in common use; combinations above the dividing line should be avoided.

S3426E

Documents
Document Sharing Hub
Full document details: UL 2703 2021

6.2 The rack mounting system shall be designed with suitable corrosion resistant materials (see Section 10) to ensure structural integrity and that the rack system, through all connection points, is a suitable bond/ground path. Note that for constructions that comply with the Exception to 9.1 for non-separately derived systems, not all the connection points will be bond/ground paths.

6.3 Clamping devices shall be evaluated with their mounting hardware designed with suitable corrosion resistant materials (see Section 10) to ensure structural integrity to suitably retain the PV modules for loading, cyclic loading and, where applicable, to maintain a bond/ground path. The clamping devices for bonding, where intended to be utilized with aluminum framed PV modules, must have a means to pierce the PV module's frame anodization, paint or other non-conductive coatings.

6.4 Threaded fasteners without suitable clamp load are subject to loosening and/or fatigue failure, therefore, threaded fasteners used to secure clamping devices and other components shall be utilized at their recommended clamp load. For grounding and bonding connections, screws shall not be sheet metal thread forming type screws. For structural/mechanical connections, screws shall be as allowed in the relevant sections of the locally adopted Building and/or Residential Codes. Threaded fasteners are to be of suitable tensile strength and corrosion resistance and are to be tightened to the recommended torque for the fastener type and size as stated by the mounting system manufacturer.

6.5 Due to the potential for fatigue failure, it is necessary to consider cyclic loading. If a PV module's uplift potential exceeds the fasteners clamp load, a fatigue potential exists. It will be necessary to calculate the fastener's clamp load, using:

a) The clamping device manufacturer's recommended torque for the fastener size and threads per inch, and

b) The number of fasteners per PV Module and compare to the potential upload, utilizing a minimum of 15 lb/ft^2 up-loading or the racking system manufacturers product load rating (in psf), whichever is greater.

A minimum safety factor of 3:1 must be utilized for the clamping load.

The same safety factor requirements shall apply to fasteners used to interconnect support structures. For fasteners used under shear loads, see 6.6.

Clamp load may be measured through testing and specific measurement of the clamp load or determined based on the following formula using the fastener torque specification provided by the manufacturer:

$$W = 12T/(Kd)$$

where:

W = Clamp Load (lbs)

T = Torque (ft-lbs)

K = Torque Coefficient (use 0.25 for 300 series stainless steel nut and bolt, or use 0.20 if antiseize compound is required to be used and is specified in the installation instructions, or use other established values)

d = Nominal diameter of the threaded fastener (inches)

See Appendix C, Examples.

Documents
Document Sharing Hub
Full document details: UL 2703 2021

6.6 For threaded fasteners utilized in shear, a slip safety factor (where joint movement could occur) between the clamped surfaces shall be 3:1 when compared to the racking system manufacturers product design load rating (in psf) for upward, downward and/or downslope, whichever is applicable. The same calculation in 6.5 is to be utilized. However, the coefficient of friction (not the same as threaded fastener "friction coefficient" in 6.5) is also to be considered between the joint mating surfaces.

For example, a galvanized steel racking system is secured with 4 vertical posts each with three 1/2 inch -13 300 series stainless cap screws and hex nuts (total of 12 cap screws/nuts) and the torque specification on the 1/2 inch -13 cap screws is 40 ft-lbs and the installation instructions require antiseize compound to be used on the fastener threads (therefore utilize 0.20 as the friction coefficient) and the array of PV Modules to be attached is 420 ft^2.

Utilizing the formula from 6.5, W = 12T/rD; W = 12 X 4/0.20 X 0.5; W = 4800 lbs of clamp force for each of the 300-series 1/2 inch -13 threads per inch cap screws and hex nuts, multiplied times 12 cap screws = 57,600 lbs of clamp force. Using the steel on steel coefficent of friction for the support structure mating surfaces from Table 6.1 of 0.74, we have 57,600 lbs X 0.74 = 42,624 lbs in total, before the bolted joints could slip and act against the clamp load of the fasteners. Compare this to the array of 420 ft^2 of PV modules X 30 lbs/ft^2 = 12,600 lbs and we have 42,624 lbs/12,600 lbs and the ratio is 3.38:1 complying with the 3:1 requirement.

Table 6.1
Coefficients of friction

Material Combination	Coefficient of Friction to be used[a]
Steel on Steel	0.74
Steel on mill aluminum	0.61
Steel on anodized aluminum	0.5
Mill aluminum on mill aluminum	1.00
Mill Aluminum on anodized Aluminum	0.5
Anodized aluminum on anodized aluminum	0.3

[a] Coefficients of friction obtained during testing may be used in place of the values in the table. Where a combination of materials is not shown in the table, coefficient of friction may be established through testing or other well established engineering references.

6.7 Where a threaded rod is utilized, such as but not limited to a leveling device, and as such a clamp load is not possible, then the stress of the component needs to be analyzed to show a factor of safety of at least 6:1 using the design load acting on that component applied to the area tributary to the component being analyzed. This is calculated using the tensile strength of the material multiplied by the stress area of the threads as follows:

$$A_s = 0.7854[D-0.9743/n]^2$$

where:

A_s = Stress Area

D = Major Diameter

n = number of threads

The result, A_s, is then multiplied by the tensile strength of the threaded rod, then comparison is made to the load the threaded rod would be subject to, using the cross-sectional area of the PV modules and the design loads.

Documents
Document Sharing Hub
Full document details: UL 2703 2021

The following tensile strengths may be used for the given alloys if a specific value is not provided by the material standard. Other suitable materials may also be used:

301	110,000 psi
302/303	90,000 psi
304/308	85,000 psi
316	80,000 psi

6.8 Unless specifically defined within a module's installation instructions, the rack mounting system and clamping device(s) shall not be designed such that a module or panel assembly bolt, screw, or other part integral to the construction of the module or panel is used for securing the PV module or panel to the rack mounting system.

6.9 The rack mounting system and clamping device(s) shall not be designed such that a PV module or panel requires any alteration unless specific details describing necessary modification (s) for alternate installation (s) are provided in the installation instructions. If a module or panel must bear a definite relationship to another for the intended installation and operation of the array (for example, to allow connectors to mate), it shall be constructed to permit it to be incorporated into the array in the correct relationship without the need for alteration.

6.10 The construction of a rack mounting system and clamping device shall be such that during installation it will not be necessary to alter or remove any cover, baffle, insulation, or shield that is required to reduce the likelihood of:

a) Excessive temperatures, or

b) Unintentional contact with a part that may involve a risk of electric shock.

Exception: A cover of a wiring compartment providing access to a connection means that may involve a risk of electric shock may be removable to allow for the making of electrical connections.

6.11 Parts shall be prevented from loosening or turning if such loosening or turning may result in a risk of fire, electric shock, or injury to persons.

6.12 With the exception of the items below, friction between surfaces is not acceptable as the sole means to inhibit the turning, loosening, or movement of a part.

Exception No. 1: Threaded fasteners that comply with 6.5 or 6.6.

Exception No. 2: Threaded fasteners utilized in shear loading, with 2 or more fasteners utilized at a joint whereby the pair (or more) of fasteners would prevent rotation at that joint, and that comply with 6.6.

Exception No. 3: A construction that utilizes set-screws for retention shall demonstrate surface deformation of the material to which they are secured and shall be separately mechanical load tested to verify a minimum 3:1 safety factor when compared to the manufacturers product design load rating and also with consideration for the additional loading where PV Modules or supports are on either side of the set screw construction (2 times 3:1).

Exception No. 4: For bonding only devices that rely on spring force and piercing function to penetrate anodization or other nonconductive coatings and into the base material, see 9.10.

Exception No. 5: Ballasted systems at the interface between the ballasted system and the roof or ground.

AVA Documents
Document Sharing Hub
Full document details: UL 2703 2021

6.13 Screw threads that are intended to clamp two or more materials together shall be installed such that the clamping load is obtained after assembly.

6.14 An adjustable or movable structural part shall be provided with a positive locking device to reduce the likelihood of unintentional shifting, such as but not limited to a cap screw or machine screw with a definite clamp load, retaining pin or the like, if any such shifting may result in a risk of fire, electric shock, or injury to persons.

6.15 Metals used in locations that may be wet or moist shall not be employed in combinations that could result in deterioration of either metal such that the product would not comply with the requirements in this standard.

6.16 Accessible edges, projections, and corners of rack mounting system and clamping devices shall be such as to reduce the risk of injury to persons.

Exception: Devices being used for clamping or bonding that have no exposed sharp edges when installed are not required to meet this requirement.

6.17 Whenever a referee measurement is necessary to determine that a part as referenced in 6.16 is not sufficiently sharp to constitute a risk of injury to persons, the method described in the Standard for Tests for Sharpness of Edges on Equipment, UL 1439, is to be employed.

7 Polymeric Materials

7.1 A polymeric material utilized in a rack mounting system and/or clamping device, which is not relied upon for electrical isolation or insulation, shall comply with the applicable requirements in the Standard for Polymeric Materials Polymeric Materials – Long Term Property Evaluations Use in Electrical Equipment Evaluations, UL 746C, concerning:

a) Ultraviolet light exposure,

b) Water exposure and immersion, and

c) Relative Thermal Index (mechanical) (RTI).

7.2 A polymeric material serving as the mechanical support and/or clamping device which is relied upon for electrical isolation or insulation involving a risk of fire or electric shock shall:

a) Have a flammability classification of HB, V-2, V-1, or V-0 determined in accordance with the Standard for Tests for Flammability of Plastic Materials for Parts in Devices and Appliances, UL 94, in addition to meeting the flammability requirements in the Standard for Polymeric Materials Polymeric Materials – Long Term Property Evaluations Use in Electrical Equipment Evaluations, UL 746C;

b) Meet the hot-wire ignition (HWI) requirements from UL 746C;

c) Have a minimum high-current arc ignition performance level category (PLC) in accordance with the following:

Flammability classification	High-current arc ignition, PLC
HB	1
V-2	2
V-1	2
V-0	3

AVA Documents
Document Sharing Hub
Full document details: UL 2703 2021