UL 2790

STANDARD FOR SAFETY

Commercial Incinerators

Documents
Document Sharing Hub

Full document details: UL 2790 2019

Documents
Document Sharing Hub

Full document details: UL 2790 2019

UL Standard for Safety for Commercial Incinerators, UL 2790

First Edition, Dated November 8, 2010

Summary of Topics

This revision to ANSI/UL 2790 dated June 18, 2019 is being issued to update the title page to reflect the most recent designation as a Reaffirmed American National Standard (ANS). No technical changes have been made.

Text that has been changed in any manner or impacted by UL's electronic publishing system is marked with a vertical line in the margin.

The requirements are substantially in accordance with Proposal(s) on this subject dated April 12, 2019.

All rights reserved. No part of this publication may be reproduced, stored in a retrieval system, or transmitted in any form by any means, electronic, mechanical photocopying, recording, or otherwise without prior permission of UL.

UL provides this Standard "as is" without warranty of any kind, either expressed or implied, including but not limited to, the implied warranties of merchantability or fitness for any purpose.

In no event will UL be liable for any special, incidental, consequential, indirect or similar damages, including loss of profits, lost savings, loss of data, or any other damages arising out of the use of or the inability to use this Standard, even if UL or an authorized UL representative has been advised of the possibility of such damage. In no event shall UL's liability for any damage ever exceed the price paid for this Standard, regardless of the form of the claim.

Users of the electronic versions of UL's Standards for Safety agree to defend, indemnify, and hold UL harmless from and against any loss, expense, liability, damage, claim, or judgment (including reasonable attorney's fees) resulting from any error or deviation introduced while purchaser is storing an electronic Standard on the purchaser's computer system.

Documents
Document Sharing Hub

Full document details: UL 2790 2019

No Text on This Page

Documents
Document Sharing Hub

Full document details: UL 2790 2019

NOVEMBER 8, 2010
(Title Page Reprinted: June 18, 2019)

ANSI/UL 2790-2010 (R2019)

UL 2790

Standard for Commercial Incinerators

Prior to the first edition, the requirements for the products covered by this standard were included in the Outline of Investigation for Commercial Incinerators, SU 2790.

First Edition

November 8, 2010

This ANSI/UL Standard for Safety consists of the First Edition including revisions through June 18, 2019.

The most recent designation of ANSI/UL 2790 as a Reaffirmed American National Standard (ANS) occurred on June 12 2019. ANSI approval for a standard does not include the Cover Page, Transmittal Pages, and Title Page.

Comments or proposals for revisions on any part of the Standard may be submitted to UL at any time. Proposals should be submitted via a Proposal Request in UL's On-Line Collaborative Standards Development System (CSDS) at https://csds.ul.com.

UL's Standards for Safety are copyrighted by UL. Neither a printed nor electronic copy of a Standard should be altered in any way. All of UL's Standards and all copyrights, ownerships, and rights regarding those Standards shall remain the sole and exclusive property of UL.

COPYRIGHT © 2019 UNDERWRITERS LABORATORIES INC.

Documents
Document Sharing Hub

Full document details: UL 2790 2019

No Text on This Page

Documents
Document Sharing Hub

Full document details: UL 2790 2019

CONTENTS

INTRODUCTION

1 Scope 7
2 Components 7
3 Units of Measurement 8
4 Undated References 8
5 Glossary 8

CONSTRUCTION – ELECTRICAL

6 General 13
7 Servicing and Adjustment 14
8 Enclosures 14
8.1 General 14
8.2 Accessibility of uninsulated live parts and film-coated wire – general 18
8.3 Doors and covers 22
8.4 Field wiring system connection 23
9 Field Wiring 23
9.1 General 23
9.2 Leads and terminals 25
10 Internal Wiring 26
10.1 General 26
10.2 Methods 27
10.3 Short-circuit protection 30
11 Separation of Circuits 30
12 Bonding for Grounding 31
13 Mounting of Electrical Components 34
14 Motors 35
14.1 General 35
14.2 Motor Overload Protection 38
15 Overcurrent Protection of High-Voltage Control-Circuit Conductors 40
15.1 General 40
15.2 Direct-connected high-voltage control circuit 41
15.3 Tapped high-voltage control circuits 41
15.4 Overcurrent-protective devices 42
16 Overcurrent Protection of Transformers 42
16.1 High-voltage transformers – General 42
16.2 High-voltage transformers – Thermal protection 43
16.3 High-voltage transformers – Overcurrent protection 43
16.4 Low-voltage transformers – General 44
16.5 Low-voltage transformers – Overcurrent protective devices 44
17 Switches and Controllers 44
18 Capacitors 45
19 Electrical Insulating Materials 45
20 High-Voltage Circuits 46
21 Low-Voltage Circuits 47

CONSTRUCTION – MECHANICAL

22 General 47
23 Corrosion Protection 52
24 Fuel Confining Parts 52

AVA Documents
Document Sharing Hub
Full document details: UL 2790 2019

CONSTRUCTION – INCINERATOR ASSEMBLY

25 General 52
26 Accessibility 53
27 Baffles 54
28 Temperature Controls 54
29 Bases 54
30 Incinerator Combustion Chambers 54
31 Ash Compartment 54
32 Radiation Shields 55
33 Casings 55
34 Flue Collars 55
35 Chimneys 55

CONSTRUCTION – BURNER ASSEMBLIES

36 General 58
37 Controls 59
38 Fan Housings and Air Tubes 60
39 Combustion Air Controls 60
40 Primary Safety Controls 62
40.1 General 62
40.2 Fuel pressure controls 64
41 Ignition Systems – General 64
42 Electric High-Tension Ignition 65
42.1 Spark igniters 65
42.2 Electrodes and bus bars 65
42.3 Insulators 66
42.4 Leads 66
42.5 Transformers 66
42.6 Gas pilots 67
43 Fittings and Piping 67
44 Valves and Regulators 70
44.1 Automatic safety shutoff valves 70
44.2 Manually operated valves 71
44.3 Gas pressure regulators 71
45 Bleeds and Vents 72

PERFORMANCE

46 General 73
47 Test Installations 73
48 Instrumentation 76
48.1 Draft measurement 76
48.2 Power measurement 76
48.3 Temperature measurements 76
49 Test Methods 80
49.1 Firing conditions 80
49.2 Test voltages 80
50 Power Input Test – Test No. 1 80
51 Combustion – Test No. 2 80
52 Burner Endurance – Test No. 3 81
53 Combustion Air Failure – Test No. 4 82
54 Undervoltage – Test No. 5 82
55 Power Interruption – Test No. 6 83

AVA Documents
Document Sharing Hub
Full document details: UL 2790 2019

56 Pilot Supervision – Test No. 7 83
57 Ignition, Gas-Electric High Tension – Test No. 8 83
58 Delayed Ignition – Test No. 9 84
59 Temperature Control – Test No. 10 84
60 Temperature Tests 85
60.1 General 85
60.2 Continuous operation – Test No. 11 88
61 Short-Circuit – Test No. 12 88
62 Overload Test, High-Voltage Transformers – Test No. 13 90
63 Burnout Test, High-Voltage Transformers – Test No. 14 91
64 Dielectric Voltage-Withstand Test – Test No. 15 91
65 Strain Relief – Test No. 16 92
66 Hydrostatic Strength – Test No. 17 92

OUTDOOR-USE EQUIPMENT

CONSTRUCTION

67 General 93
68 Enclosures 93
69 Field Wiring Connections 95
70 Wiring 95
71 Electrical Insulation Material 96

PERFORMANCE

72 Rain Test – Test No. 18 96
73 Wind Tests – Test No. 19 99
74 Accelerated Aging Test – Gaskets, Adhesives, and Sealing Compounds – Test No. 20 100
75 Metallic Coating Thickness Test – Chromic Acid Dropping Test – Test No. 21 100

MANUFACTURING AND PRODUCTION TESTS

76 General 102

MARKINGS

77 General 103

INSTRUCTIONS

78 General 106

Documents
Document Sharing Hub

Full document details: UL 2790 2019

No Text on This Page

Documents
Document Sharing Hub

Full document details: UL 2790 2019

INTRODUCTION

1 Scope

1.1 These requirements apply to direct-fed incinerators, including those of the gas and electric ignition types, designed primarily for use as a crematory (as defined in 5.30). They are not intended to incinerate any hazardous, including biological/infectious, chemical and/or explosive, types of material and not intended for use in spaces in which flammable vapor or gases may be present.

1.2 These requirements are only intended to cover the safety aspect of the direct-fed incinerators, with respect to fire, shock, mechanical hazards, and carbon monoxide emissions.

1.3 Crematories covered by these requirements are the factory-made type and may be field assembled. These requirements do not cover an incinerator that requires the use of a brick or masonry wall, etc., which forms a part of the building structure.

1.4 Gas-heating incinerators covered by these requirements may be operated without a competent attendant being constantly on duty at the burners while the burners are in operation.

1.5 Incinerators may be subject to local regulations and/or EPA regulations, such as the Clean Air Act and/or the Resource Conservation and Recovery Act, with respect to:

a) Particulate emissions, oxides of nitrogen, and other products of combustion in the flue gas. These requirements do not include limitations on Nox emissions and only carbon monoxide was required to be within the specified limits.

b) The types of wastes to be incinerated.

1.6 Additional installation and operation requirements are available as defined by the National Fuel Gas Code, NFPA 54, the Liquefied Petroleum Gas Code, NFPA 58, the National Electrical Code, NFPA 70 and other codes as applicable.

2 Components

2.1 Except as indicated in 2.2, a component of a product covered by this Standard shall comply with the requirements for that component.

2.2 A component need not comply with a specific requirement that:

a) Involves a feature or characteristic not needed in the application of the component in the product covered by this Standard, or

b) Is superseded by a requirement in this Standard.

2.3 A component shall be used in accordance with its rating established for the intended conditions of use.

2.4 Specific components are incomplete in construction features or restricted in performance capabilities. Such components are intended for use only under limited conditions, such as certain temperatures not exceeding specified limits, and shall be used only under those specific conditions.

Documents
Document Sharing Hub
Full document details: UL 2790 2019

3 Units of Measurement

3.1 Values stated without parentheses are the requirement. Values in parentheses are explanatory or approximate information.

3.2 Unless indicated otherwise, all voltage and current values mentioned in this standard are rms.

4 Undated References

4.1 Any undated reference to a code or standard appearing in the requirements of this Standard shall be interpreted as referring to the latest edition of that code or standard.

5 Glossary

5.1 For the purposes of this Standard the following definitions apply.

5.2 AIR SHUTTER – An adjustable device for varying the size of the air inlet or inlets regulating primary or secondary air.

5.3 AIR SHUTTER, AUTOMATICALLY OPERATED – An air shutter operated by an automatic control.

5.4 AIR SHUTTER, MANUALLY OPERATED – An air shutter manually set and locked in the desired position.

5.5 ALUMINUM COATED STEEL – An aluminum coated steel in which the bond between the steel and the aluminum is an iron-aluminum alloy.

5.6 ASH – The solid residue remaining after combustion or incineration has been completed.

5.7 ASH PIT DOOR – A door below the grate level used for removing ash or other noncombustibles from the incinerator.

5.8 BAFFLE – An object placed in an incinerator to direct the flow of air or flue gases.

5.9 BASE – The main supporting frame or structure of the assembly.

5.10 BURNER – A device for the final conveyance of the gas, or a mixture of gas and air, to the combustion zone.

5.11 BURNER, AUTOMATICALLY LIGHTED – One where fuel to the main burner is normally turned on and ignited automatically.

5.12 BURNER, MANUALLY LIGHTED – One where fuel to the main burner is turned on only by hand and ignited under supervision.

5.13 BURNER HEAD, GAS – That portion of a burner beyond the outlet end of the mixer tube which contains the ports.

5.14 CASING – An enclosure forming the outside of the incinerator, no parts of which are likely to be subjected to intense heat.

Documents
Document Sharing Hub
Full document details: UL 2790 2019

5.15 CHIMNEY, HIGH-HEAT – A chimney capable of withstanding a continuous flue gas temperature exceeding 982°C (1800°F).

5.16 CHIMNEY, MEDIUM-HEAT – A chimney capable of withstanding a continuous flue gas temperature not exceeding 982°C (1800°F).

5.17 CHIMNEY CONNECTOR – The pipe which connects a fuel burning incinerator to a chimney.

5.18 CHIMNEY, FACTORY BUILT – Those chimneys of the factory-made type intended for use with gas fired incinerators.

5.19 COMBUSTIBLE MATERIAL – Combustible material, as pertaining to materials adjacent to or in contact with heat producing incinerators, chimney connectors and vent connectors, means material made of or surfaced with wood, compressed paper, plant fibers, or other material that will ignite and burn. Such material shall be considered as combustible even though flameproofed, fire retardant treated, or plastered.

5.20 COMBUSTION – As used herein, the rapid oxidation of fuel accompanied by the production of heat, or heat and light. Complete combustion of a fuel is possible only in the presence of an adequate supply of oxygen.

5.21 COMBUSTION CHAMBER – The portion of an incinerator within which combustion occurs.

5.22 COMBUSTION DETECTOR – That part of a primary safety control which is responsive directly to flame properties.

5.23 COMBUSTION PRODUCTS – Constituents resulting from the combustion of a fuel with the oxygen of the air, including the inerts, but excluding excess air.

5.24 CONTROL – A device designed to regulate the fuel, air, or electrical supply to the controlled incinerators. It may be automatic, semi-automatic, or manual.

5.25 CONTROL INPUT, COMBUSTION – A control which automatically regulates the firing rate at predetermined air-fuel ratio in accordance with load demand. It may be a type which positions the air and fuel supplies for low fire and for high fire as required to meet the load demands, or it may be a modulating type which gradually varies the air and fuel supplies within limits to meet the load demand.

5.26 CONTROL, LIMIT – A safety (protective) control that is responsive to changes in pressure, temperature or flow. This control may be used for regulating purposes or may be set beyond the intended operating range of the controlled equipment to limit its operation. This control may be electrical or mechanical in nature.

5.27 CONTROL, OPERATING – A control to start or regulate burner firing according to load demand and to stop or regulate firing of the burner on satisfaction of demand or upon reaching normal temperature or pressure in the incinerator being fired. An operating control may be electrical or mechanical in nature and may actuate auxiliary devices to perform the functions described above. An operating control could provide Type 1 or Type 2 action. (See 5.76 and 5.77.)

5.28 CONTROL, SAFETY (PROTECTIVE) – A control intended to prevent the risk of electric shock, fire, or injury to persons during abnormal operation of the appliance. An example would be a high gas pressure limit control. A protective control always provides Type 2 action. (See 5.76 and 5.77.)

Documents
Document Sharing Hub
Full document details: UL 2790 2019

5.29 CONTROL, PRIMARY SAFETY – An automatic control that monitors the operation of a gas-fired or an oil-fired burner. It normally consists of the following sections that may be integrated into a common unit or may be separate units, interconnected by wiring:

a) Programming Unit – A device that programs the burner through start-up and shutdown operations in response to signals from regulating, limiting, and monitoring devices. It also provides the timings, as required, in proper sequence, for purging, flame establishing periods and in case of ignition or flame failure, for safety shutdown (lockout).

b) Combustion Detector – A device that is responsive to flame properties. It monitors the flame at the point of flame supervision and transmits a signal to the programming unit, indicating absence or presence of flame.

5.30 CREMATORY – An incinerator, for commercial purposes, used to reduce to ash animal and human cadavers. It is intended to be factory-made and can be installed as a packaged unit or assembled in the field from factory built subassemblies.

5.31 ELECTRICAL CIRCUITS:

a) High-Voltage Circuit – A circuit involving a potential of not more than 600 volts and having circuit characteristics in excess of those of a low-voltage circuit.

b) Low-Voltage Circuit – A circuit involving a potential of not more than 30 volts alternating current (42.4 peak) or direct current and supplied by a primary battery or by a standard Class 2 transformer or other suitable transforming device, or by a suitable combination of transformer and fixed impedance having output characteristics in compliance with what is required for a Class 2 transformer. A circuit derived from a source of supply classified as a high-voltage circuit, by connecting resistance in series with the supply circuit as a means of limiting the voltage and current, is not considered to be a low-voltage circuit.

c) Isolated Limited Secondary Circuit – A circuit of limited energy derived from an isolated secondary winding of a transformer having a maximum capacity of 100 volt-amperes (VA) and open-circuit secondary voltage rating not exceeding 1000 volts.

d) Safety Control Circuit – A circuit involving one or more safety controls in which failure due to grounding, opening, or shorting of any part of the circuit can cause unsafe operation of the controlled incinerator or can introduce a direct fire or life hazard.

5.32 EXCESS AIR – Air which passes through the combustion chamber and the incinerator flues in excess of that which is theoretically required for complete combustion.

5.33 FLAME SAFEGUARD – See Control, Primary Safety, 5.29.

5.34 FLUE – A conduit or passageway, vertical or nearly so, for conveying flue gases to the outer air.

5.35 FLUE COLLAR – That portion of an incinerator designed for attachment of the chimney, flue or vent connector.

5.36 FLUE GASES – Combustion products and excess air.

5.37 FLUE PIPE – The conduit connecting the incinerator with the chimney.

5.38 GAS VENT – The piping and fittings for conveying flue gases to the outside atmosphere.

Documents
Document Sharing Hub
Full document details: UL 2790 2019

5.39 HEATING SURFACES – All surfaces which transmit heat directly from flame or flue gases to the medium to be heated.

5.40 IGNITION, CONTINUOUS – Ignition by an energy source which is continuously maintained through the time the burner is in service, whether the main burner is firing or not.

5.41 IGNITION, INTERMITTENT – Ignition by an energy source which is continuously maintained through the time the burner is firing.

5.42 IGNITION, INTERRUPTED – Ignition by an energy source which is automatically energized each time the main burner is fired and subsequently is automatically shut off during the firing cycle.

5.43 INTERLOCK – A control to prove the physical state of a required condition, and to furnish that proof to the primary safety control circuit.

5.44 LINER – See Radiation Shield, 5.69.

5.45 LINING – Those interior surfaces of a combustion chamber which are exposed to combustion during use of the incinerator.

5.46 LIQUEFIED-PETROLEUM GAS – Fuel gases, including commercial propane, predominantly propane or propylene or commercial butane, predominantly butane, isobutane, and/or butylene.

5.47 LP-GAS AIR MIXTURE – Liquefied-petroleum gases distributed at relatively low pressures and normal atmospheric temperatures which have been diluted with air to produce desired heating value and utilization characteristic.

5.48 MAIN BURNER FLAME-ESTABLISHING PERIOD – The interval of time the main burner fuel safety shutoff valves are permitted to be open before the primary safety control is required to supervise the main burner flame.

5.49 MANIFOLD – The conduit of an incinerator which supplies gas to the individual burner.

5.50 MIXER, GAS – The combination of mixer head, mixer throat, and mixer tube.

a) Mixer Head – That portion of an injection type burner, usually enlarged, into which primary air flows to mix with the gas stream.

b) Mixer Throat – That portion of the mixer which has the smallest cross-sectional area and which lies between the mixer head and the mixer tube.

c) Mixer Tube – That portion of the mixer which lies between the throat and the burner head.

5.51 MIXER FACE, GAS – The air inlet end of the mixer head.

5.52 NORMAL CARE – The periodic tasks usually performed to operate and maintain an incinerator, such as air, fuel, pressure, and temperature regulation, cleaning, lubrication, and resetting of controls.

5.53 ORIFICE – The opening in a cap, spud, or other device whereby the flow of gas is limited and through which the gas is discharged to a burner.

5.54 ORIFICE CAP (HOOD) – A movable fitting having an orifice which permits adjustment of the flow of gas by the changing of its position with respect to a fixed needle or other device.

Documents
Document Sharing Hub
Full document details: UL 2790 2019

5.55 ORIFICE SPUD – A removable plug or cap containing an orifice and which permits adjustment of the flow of gas either by substitution of a spud with a different sized orifice or by the motion of a needle with respect to it.

5.56 PILOT – A small flame which is utilized to ignite the fuel at the main burner or burners.

5.57 PILOT, AUTOMATIC – Consists of an automatic pilot device and pilot burner assembly securely assembled in fixed functional relationship.

5.58 PILOT, CONTINUOUS – A pilot that burns without turn-down throughout the entire time the burner assembly is in service, whether the main burner is firing or not.

5.59 PILOT, EXPANDING – A pilot that burns throughout the entire time the burner assembly is in service, whether the main burner is firing or not. Upon a call for heat, the pilot is automatically expanded so as to reliably ignite the main burner. This pilot may be turned down automatically at the end of main burner flame-establishing period.

5.60 PILOT FLAME-ESTABLISHING PERIOD – The interval of time fuel is permitted to be delivered to a proved pilot before the primary safety control is required to detect pilot flame.

5.61 PILOT, INTERMITTENT – A pilot which is automatically lighted each time there is a call for heat, if burns during the entire period that the main burner is firing.

5.62 PILOT, INTERRUPTED – A pilot which is automatically lighted each time there is a call for heat. The pilot fuel is cut off automatically at the end of the main burner flame-establishing period.

5.63 PILOT, PROVED – A pilot flame supervised by a primary safety control.

5.64 PORT – Any opening in a burner head through which fuel or an air-fuel mixture is discharged for ignition.

5.65 PRIMARY AIR – The air introduced into a burner which mixes with the fuel before it reaches the ignition zone.

5.66 POST-PURGE PERIOD – The period of time after the fuel delivered to the burner is stopped and during which the burner motor or fan continues to run to supply air to the combustion chamber.

5.67 PREPURGE PERIOD – The period of time during the burner start-up in which air is introduced into the combustion chamber and the associated flue passages in such volume and manner as to completely replace the air or fuel-air mixture contained therein prior to initiating ignition.

5.68 PROOF OF CLOSURE SWITCH – A non-field adjustable switch installed in a safety shutoff valve by its manufacturer that activates only after the valve is fully closed.

5.69 RADIATION SHIELD – A separate panel or panels interposed between heating surfaces and adjacent objects to reduce heat transmission by radiation.

5.70 READILY ACCESSIBLE – Capable of being reached easily and quickly for operation, adjustment, and inspection.

5.71 REGULATOR, GAS-PRESSURE – A device for controlling and maintaining a uniform outlet gas pressure.

Documents
Document Sharing Hub
Full document details: UL 2790 2019

5.72 RESPONSE TIME – FLAME FAILURE – The interval between the occurrence of flame extinguishment and de-energizing the safety shutoff means.

5.73 SAFETY CONTROL – See Control, Safety, 5.28.

5.74 SAFETY SHUTDOWN – The action of shutting off all fuel and ignition energy to the incinerator by means of a safety control or controls such that restart cannot be accomplished without manual reset.

5.75 SECONDARY AIR – The air externally supplied to the flame at the point of combustion.

5.76 THERMOSTAT – An automatic control actuated by temperature change to maintain temperatures between predetermined limits.

5.77 TOOLS, SPECIAL – Those tools that are not available on the open retail market.

5.78 TYPE 1 ACTION – Automatic action for which the manufacturing deviation and the drift of its operating value, operating time, or operating sequence have not been declared and tested to the Standard for Automatic Electrical Controls for Household and Similar Use, Part 1: General Requirements, UL 60730-1.

5.79 TYPE 2 ACTION – Automatic action for which the manufacturing deviation and the drift of its operating value, operating time, or operating sequence have been declared and tested to the Standard for Automatic Electrical Controls for Household and Similar Use, Part 1: General Requirements, UL 60730-1.

5.80 VALVE, BURNER-INPUT CONTROL – An automatic-control valve for regulating the input of fuel to a burner.

5.81 VALVE, SAFETY SHUTOFF – A valve that is automatically closed by the safety control system or by an emergency device. Such valve may be of the automatic or manually opened type.

5.82 VALVE, LUBRICATED PLUG TYPE – A valve of the plug and barrel type designed for maintaining a lubricant between the bearing surfaces.

5.83 VALVE, MANUAL GAS SHUTOFF – A manually operated valve in a gas line for the purpose of completely turning on or shutting off the gas supply.

5.84 VENT CONNECTOR – The pipe which connects a gas-fired incinerator to a gas vent or chimney.

5.85 ZERO GOVERNOR – A regulating device which is normally adjusted to deliver gas at atmospheric pressure within its flow rating.

CONSTRUCTION – ELECTRICAL

6 General

6.1 Electrical devices and wiring shall be arranged so that oil or water will not drip or run on them during normal usage or from a connection required to be uncoupled for servicing the incinerator.

6.2 Attachment plugs or separable connectors shall not be used in circuits when the breaking or making of the circuit by such devices may result in operation of the incinerator in a manner that involves a risk of fire, electric shock, or injury to persons.

Documents
Document Sharing Hub
Full document details: UL 2790 2019

7 Servicing and Adjustment

7.1 Service functions which may have to be performed with the incinerator energized include:

a) Adjusting the setting of temperature controls with or without marked dial settings;

b) Resetting control trip mechanism; operating manual switches;

c) Adjusting air-flow dampers.

A factory set and sealed control is not considered to be adjustable.

7.2 Adjustable or resettable electrical control or manual switching devices may be located or oriented with respect to uninsulated live parts so that manipulation of the mechanism for adjustment, resetting, or operation can be accomplished in the normal direction of access if uninsulated live parts or moving parts are:

a) Not located in front, in the direction of access of the mechanism; and

b) Are not located within 6 inches (152 mm) on any side or behind the mechanism, unless guarded.

7.3 An electrical control component which may require examination, adjustment, servicing, or maintenance while energized, not including voltage measurements, shall be located and mounted with respect to other components and with respect to grounded metal parts so that it is accessible for electrical service functions without subjecting the serviceman to the likelihood of risk of electric shock from adjacent uninsulated live parts or to the risk of injury from adjacent moving parts.

7.4 Components in a low-voltage circuit are to comply with the requirements of 21.3 in their relation to uninsulated live parts in a high-voltage circuit and to moving parts.

8 Enclosures

8.1 General

8.1.1 Uninsulated live high-voltage parts shall be enclosed or guarded to prevent unintentional contact by persons during normal use of the appliance. This applies to such parts located in a compartment where access is required for normal care of the appliance, such as resetting controls, replacing filters, lubrication, cleaning, and the like.

8.1.2 Among the factors taken into consideration when judging the acceptability of an enclosure are:

a) Mechanical strength;

b) Resistance to impact;

c) Moisture-absorptive properties;

d) Combustibility;

e) Resistance to corrosion; and

f) Resistance to distortion at temperatures to which the enclosure may be subjected under conditions of normal or abnormal use.

Documents
Document Sharing Hub
Full document details: UL 2790 2019

For a nonmetallic enclosure or part of an enclosure, all these factors are considered with respect to thermal and chemical aging according to the requirements in the Standard for Polymeric Material – Use in Electrical Equipment Evaluations, UL 746C.

8.1.3 The enclosure shall reduce the likelihood of the emission of molten metal, burning insulation, flaming particles, or the like through openings onto combustible material, including the surface on which the equipment is mounted.

8.1.4 Where the design and location of the component and the strength and rigidity of the outer cabinet warrant, an individual enclosure of thinner metal than specified in Table 8.1 or Table 8.2 whichever applies, may be employed.

8.1.5 Electrical parts within the outer cabinet need not be individually enclosed if the assembly conforms with all of the following:

a) Their design and location with respect to openings in the outer cabinet will not result in the emission of flame or molten metal through openings in the cabinet or if it can be shown that failure of the component would not result in a risk of fire;

b) There are no openings in the bottom of the compartment in which the part is located which would permit dropping of molten metal, and the like, onto combustible material;

c) The part is not in proximity to combustible material other than electrical insulation;

d) The part is not located closer than 5 inches (127 mm) to the outer cabinet unless the thickness of sheet metal is in compliance with Table 8.1;

e) The part is not located in an air-handling compartment;

f) The thickness of the outer cabinet is not less than two-gage thicknesses thinner than indicated in Table 8.1 for the maximum dimensions of the cabinet enclosure.

g) The part is not subject to unintentional contact by persons. See 22.8 – 22.17.

8.1.6 The requirements of 8.1.5 apply only to parts of high-voltage circuits as defined by these requirements.

8.1.7 All intended mounting positions of the unit are to be considered when determining if it complies with the requirement of 8.1.3.

8.1.8 Cabinet compartments housing gas piping and controls shall be ventilated.

8.1.9 Steel enclosures shall be protected against corrosion by painting, plating, or equivalent means.

8.1.10 The thickness of a sheet metal enclosure shall be as indicated in Table 8.1 and Table 8.2.

Exception: When the design and location of components and the strength and rigidity of the outer cabinet warrant, an individual enclosure thinner than specified in Table 8.1 and Table 8.2 is able to be employed.

Documents
Document Sharing Hub

Full document details: UL 2790 2019

Table 8.1
Minimum thickness of sheet metal for enclosures – carbon steel or stainless steel

Without supporting frame[a]				With supporting frame or equivalent reinforcing				Minimum thickness, inches (mm)			
Maximum width[b]		Maximum length[c]		Maximum width[b]		Maximum length		Uncoated (MSG)		Metal coated (GSG)	
inches	(cm)	inches	(cm)	inches	(cm)	inches	(cm)				
4.0	(10.2)	Not limited		6.25	(15.9)	Not limited		0.020	(0.51)	0.023	(0.58)
4.75	(12.1)	5.75	(14.6)	6.75	(17.1)	8.25	(21.0)	(24)		(24)	
6.0	(15.2)	Not limited		9.5	(24.1)	Not limited		0.026	(0.66)	0.029	(0.74)
7.0	(17.8)	8.75	(22.2)	10.0	(25.4)	12.5	(31.8)	(22)		(22)	
8.0	(20.4)	Not limited		12.0	(30.5)	Not limited		0.32	(0.81)	0.034	(0.86)
9.0	(22.9)	11.5	(29.2)	13.0	(33.0)	16.0	(40.6)	(20)		(20)	
12.5	(31.8)	Not limited		19.5	(49.5)	Not limited		0.042	(1.07)	0.045	(1.14)
14.0	(35.6)	18.0	(45.7)	21.0	(53.3)	25.0	(63.5)	(18)		(18)	
18.0	(45.7)	Not limited		33.0	(83.8)	Not limited		0.060	(1.53)	0.063	(1.61)
25.0	(63.5)	31.0	(78.7)	35.0	(89.0)	43.0	(109.2)	(15)		(15)	
25.0	(63.4)	Not limited		39.0	(99.1)	Not limited		0.067	(1.70)	0.070	(1.78)
29.0	(73.7)	36.0	(91.4)	41.0	(104.0)	51.0	(129.5)	(14)		(14)	
33.0	(83.8)	Not limited		51.0	(129.5)	Not limited		0.080	(2.04)	0.084	(2.13)
35.0	(89.0)	47.0	(119.4)	54.0	(137.1)	66.0	(167.6)	(13)		(13)	
42.0	(106.7)	Not limited		64.0	(162.6)	Not limited		0.093	(2.36)	0.097	(2.46)
42.0	(119.4)	59.0	(149.9)	68.0	(172.7)	84.0	(213.4)	(12)		(12)	
52.0	(135.1)	Not limited		80.0	(203.2)	Not limited		0.108	(2.74)	0.111	(2.80)
60.0	(152.4)	74.0	(188.0)	84.0	(213.4)	103.0	(261.6)	(11)		(11)	
63.0	(160.0)	Not limited		97.0	(246.4)	Not limited		0.123	(3.12)	0.126	(3.20)
73.0	(185.4)	90.0	(228.6)	103.0	(261.6)	127.0	(322.6)	(10)		(10)	

[a] A supporting frame is a structure of angle or channel or a folded rigid section of sheet metal which is rigidly attached to and has essentially the same outside dimensions as the enclosure surface and which has sufficient torsional rigidity to resist the bending moments which may be applied via the enclosure surface when it is deflected. Construction that is considered to have equivalent reinforcing may be accomplished by designs that will produce a structure which is a rigid as one built with a frame of angles or channels. Construction considered to be without supporting frame includes:

1) single sheet with single formed flanges (formed edges),

2) a single sheet which is corrugated or ribbed, and

3) an enclosure surface loosely attached to a frame, for example, with spring clips.

[b] The width is the smaller dimension of a rectangular sheet metal piece which is part of an enclosure. Adjacent surfaces of an enclosure may have supports in common and be made of a single sheet.

[c] For panels which are not supported along one side, e.g., side panels of boxes, the length of the unsupported side shall be lifted to the dimensions specified unless the side in question is provided with a flange at lease 1/2 inch (12.7 mm) wide.

Documents
Document Sharing Hub
Full document details: UL 2790 2019

Table 8.2
Minimum thickness of sheet metal for enclosures – aluminum, copper, or brass

Without supporting frame[a]				With supporting frame or equivalent reinforcing[a]				Minimum thickness	
Maximum width[b]		Maximum length[c]		Maximum width[b]		Maximum length			
inches	(cm)	inches	(cm)	inches	(cm)	inches	(cm)	(mm)	(AWG)
3.0	(7.6)	Not limited		7.0	(17.8)	Not limited		0.023	(0.58)
3.5	(8.9)	4.0	(10.2)	8.5	(21.6)	9.5	(24.1)		(22)
4.0	(10.2)	Not limited		10.0	(25.4)	Not limited		0.029	(0.74)
5.0	(12.7)	6.0	(15.2)	10.5	(26.7)	13.5	(34.3)		(20)
6.0	(15.2)	Not limited		14.0	(35.6)	Not limited		0.036	(0.91)
6.5	(16.5)	8.0	(20.3)	15.0	(38.1)	18.0	(45.7)		(18)
8.0	(20.3)	Not limited		19.0	(48.3)	Not limited		0.045	(1.14)
9.5	(24.1)	11.5	(29.2)	21.0	(53.3)	25.0	(63.5)		(16)
12.0	(30.5)	Not limited		28.0	(71.1)	Not limited		0.058	(1.47)
14.0	(35.6)	16.0	(40.6)	30.0	(76.2)	37.0	(94.0)		(14)
18.0	(45.7)	Not limited		42.0	(106.7)	Not limited		0.075	(1.91)
20.0	(50.8)	25.0	(63.4)	45.0	(114.3)	55.0	(139.7)		(12)
25.0	(63.4)	Not limited		60.0	(152.4)	Not limited		0.095	(2.41)
29.0	(73.7)	36.0	(91.4)	64.0	(162.6)	78.0	(198.1)		(10)
37.0	(94.0)	Not limited		87.0	(221.0)	Not limited		0.122	(3.10)
42.0	(106.7)	53.0	(134.6)	93.0	(236.2)	114.0	(289.6)		(8)
52.0	(132.1)	Not limited		123.0	(312.4)	Not limited		0.153	(3.89)
60.0	(152.4)	74.0	(188.0)	130.0	(330.2)	160.0	(406.4)		(6)

[a] A supporting frame is a structure of angle or channel or a folded rigid section of sheet metal which is rigidly attached to and has essentially the same outside dimensions as the enclosure surface and which has sufficient torsional rigidity to resist the bending moments which may be applied via the enclosure surface when it is deflected. Construction that is considered to have equivalent reinforcing may be accomplished by designs that will produce a structure which is as rigid as one built with a frame of angles or channels. Construction considered to be without supporting frame includes:

1) single sheet with single formed flanges (formed edges),

2) a single sheet which is corrugated or ribbed, and

3) an enclosure surface loosely attached to a frame, such as, with spring clips.

[b] The width is the smaller dimension of a rectangular sheet metal piece which is part of an enclosure. Adjacent surfaces of an enclosure may have supports in common and be made of a single sheet.

[c] For panels which are not supported along one side, for example, side panels of boxes, the length of the unsupported side shall be limited to the dimensions specified unless the side in question is provided with a flange at lease 1/2 inch (12.7 mm) wide.

8.1.11 Sheet metal to which a wiring system is to be connected in the field shall have a thickness not less than 0.032 inch (0.81 mm) (No. 20 MSG) if uncoated steel, not less than 0.034 inch (0.86 mm) (No. 20 GSG) if galvanized steel, and not less than 0.045 inch (1.14 mm) if nonferrous.

8.1.12 If insulating material other than electrical insulation is provided within the enclosure, consideration is given to the burning characteristics and combustibility of the material and the proximity of an ignition source.

8.1.13 Terminal housings of motors, to which connections are to be made in the field, shall be of metal and shall be sized in accordance with the National Electrical Code, NFPA 70.

AVA Documents
Document Sharing Hub
Full document details: UL 2790 2019

8.1.14 A junction box partially formed by another part such as a fan scroll or a motor casing is to fit such that:

a) An opening between the box and motor frame having a dimension exceeding 1/2 inch (12.7 mm) does not permit a flat feeler gauge, 5/64 by 1/2 inch (2.0 by 12.7 mm) wide to enter; and

b) An opening between the box and motor frame having no dimension exceeding 1/2 inch (12.7 mm) does not permit the entrance of a 13/64 inch (5.2 mm) diameter rod.

8.1.15 The criteria for judging an opening in an electrical enclosure are given in the following items and the related figures:

a) An opening that will not permit entrance of a 3/4 inch (19.1 mm) diameter rod is acceptable if:

1) A probe, as illustrated in Figure 8.1, cannot be made to touch any uninsulated live part when inserted through the opening; and

2) A probe, as illustrated in Figure 8.1, cannot be made to touch enamel insulated wire when inserted through the opening.

b) An opening that will permit entrance of a 3/4 inch diameter rod is acceptable under the conditions described in Doors and covers, 8.3.

8.1.16 During the examination for conformance with the requirements in 8.1.15, a part of the enclosure, which may be removed with the use of tools is to be removed.

8.2 Accessibility of uninsulated live parts and film-coated wire – general

8.2.1 During the examination of a product to determine whether it complies with the requirements concerning accessibility of uninsulated live parts and film-coated wire:

a) A part of the enclosure that may be opened or removed by the user without using a tool, (to attach an accessory, to make an operating adjustment, or for other reasons) is to be opened or removed;

b) Insulated brush caps are not required to be additionally enclosed;

c) The probes shall be applied to any depth that the opening will permit; and shall be rotated or angled before, during, and after insertion through the opening to any position that is necessary to examine the enclosure; and

d) The probes shall be used as measuring instruments to judge the accessibility provided by an opening, and not as instruments to judge the strength of a material; they shall be applied with the minimum force necessary to determine accessibility.

8.2.2 The criteria for judging an opening in an electrical enclosure are given in (a) – (b) and the related figures:

a) An opening that will not permit entrance of a 3/4 inch (19.1 mm) diameter rod is acceptable if:

1) A probe as illustrated in Figure 8.1 cannot be made to touch any uninsulated live part when inserted through the opening; and

2) A probe as illustrated in Figure 8.2 cannot be made to touch film-coated wire when inserted through the opening.

Documents
Document Sharing Hub
Full document details: UL 2790 2019

b) An opening that will permit entrance of a 3/4 inch (19.1 mm) diameter rod is acceptable under the conditions described in Doors and covers, 8.3.

Figure 8.1
Probe for uninsulated live metal parts

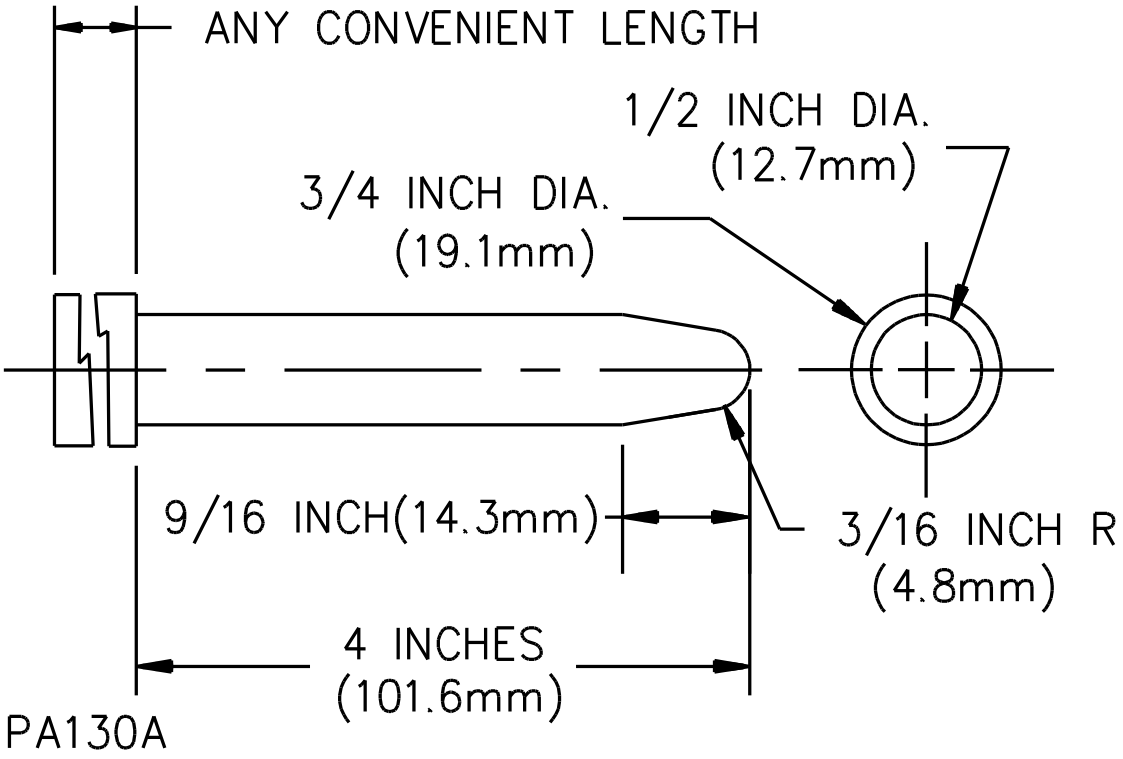

Documents
Document Sharing Hub
Full document details: UL 2790 2019

Figure 8.2
Probe for film-coated wire

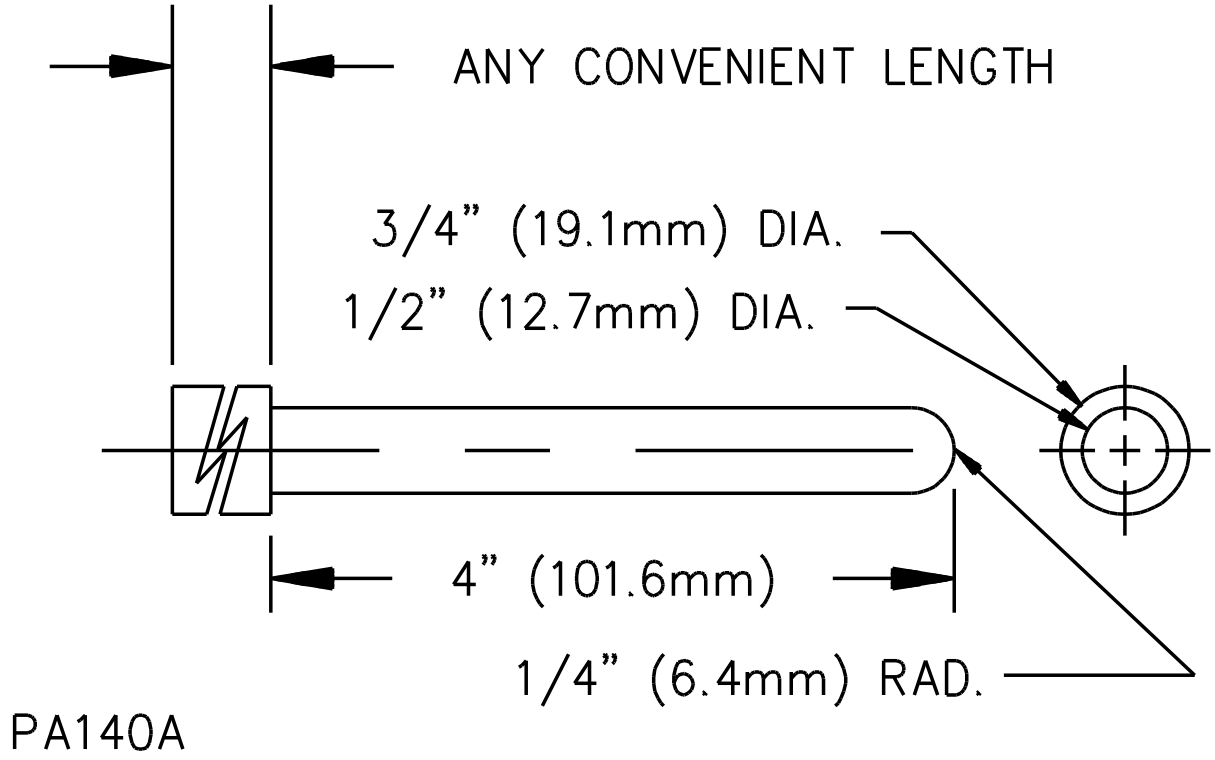

Documents
Document Sharing Hub
Full document details: UL 2790 2019

Figure 8.3
Opening in enclosure

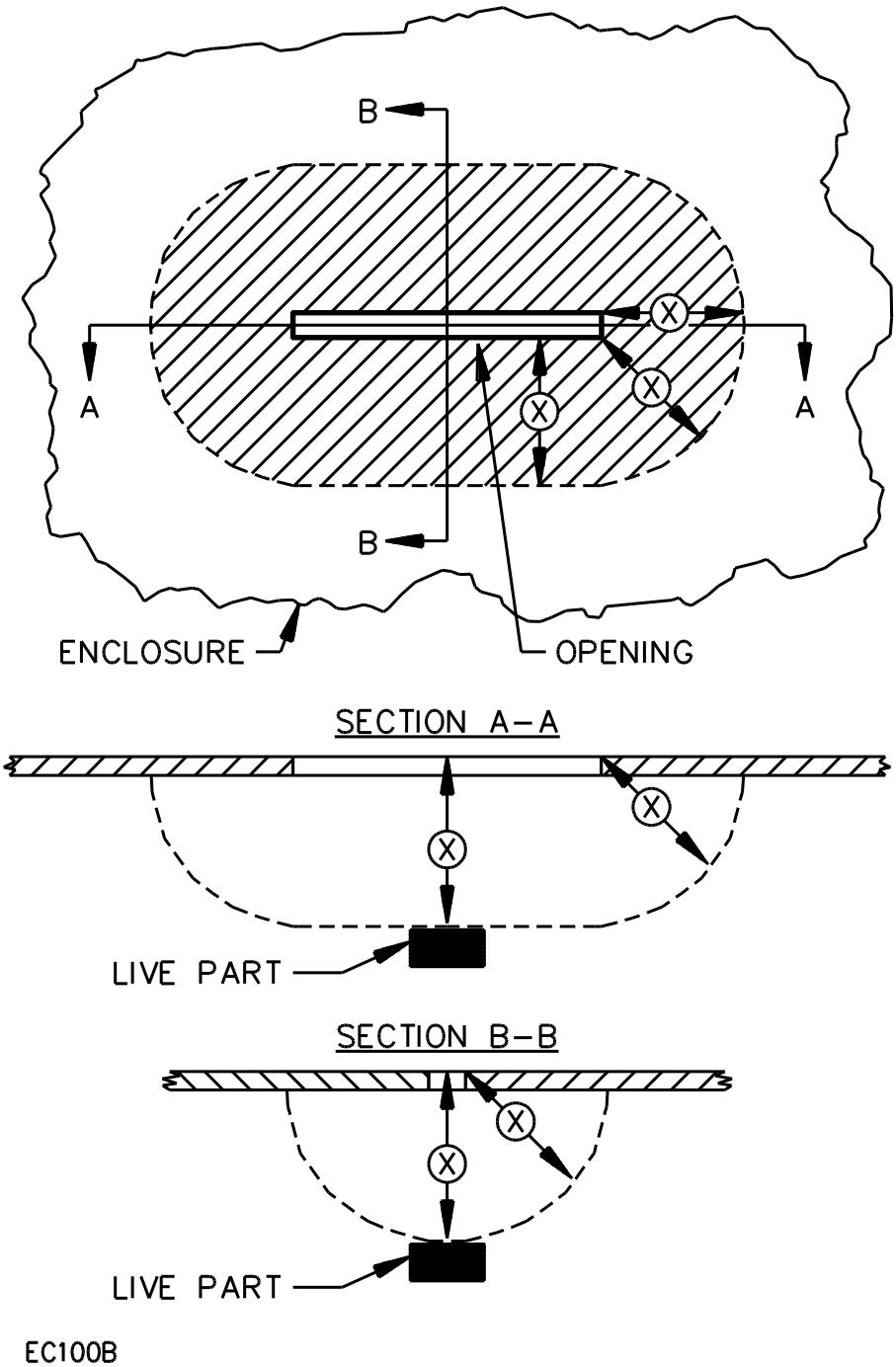

The opening is acceptable if, within the enclosure, there is no uninsulated live part or enamel-insulated wire:

a) Less than X inches (mm) from the perimeter of the opening, as well as

b) Within the volume generated by projecting the perimeter X inches (mm) normal to its plane. X equals five times the diameter of the largest diameter rod which can be inserted through the opening, but not less than 4 inches (102 mm).

Documents
Document Sharing Hub
Full document details: UL 2790 2019

8.3 Doors and covers

8.3.1 A cover or access panel of an enclosure for uninsulated live parts shall be provided with means for securing it in place.

8.3.2 A hinged or pivoted panel or cover shall be positioned or arranged so that it is not subject to falling or swinging due to gravity or normal vibration in such a manner as to cause injury to persons by the panel or cover, or by hazardous moving parts or uninsulated live parts.

8.3.3 The assembly incorporating overcurrent protective devices shall be arranged so that fuses can be replaced and manual-reset devices can be reset, as applicable, without removing parts other than a service cover or panel and a cover or door enclosing the device. See 8.3.7.

8.3.4 A required protective device shall be wholly inaccessible from outside the assembly without opening a door or cover, except that the operating handle of a circuit breaker, the operating button of a manually operable motor protector, the reset button of a manually resettable pressure switch, and similar parts may project outside the boiler assembly enclosure.

8.3.5 An opening in an enclosure to provide clearance around a dial, knob, lever, or handle shall not allow the entrance of a rod having a diameter of 9/64 inch (3.6 mm) at any setting or position of the dial, knob, lever, or handle.

8.3.6 A fuseholder shall be so constructed, installed, or protected that adjacent uninsulated high-voltage live parts within 4 inches (102 mm), other than the screw shell of a plug fuseholder, cartridge fuse clips, or wiring terminals to the fuseholder, will not be exposed to contact by persons removing or replacing fuses. An insulating barrier of vulcanized fiber or equivalent material employed for this purpose shall be not less than 0.028 inch (0.71 mm) in thickness.

8.3.7 The door or cover of an enclosure shall be hinged if it gives access to fuses or any motor overload protective device, the normal functioning of which requires renewal, or if it is necessary to open the cover in connection with the normal operation of the protective device such as resetting a manual reset overload protective device.

Exception: A hinged cover is not required for a device in which the only fuses enclosed are:

a) Control-circuit fuses of 2 amperes or less, provided the fuses and control-circuit loads, other than a fixed control-circuit load, such as pilot lamp, are within the same enclosure;

b) Extractor-type fuses each with its own enclosure; or

c) Fuses in low-voltage circuits.

8.3.8 Hinged covers, where required, shall not depend solely upon screws or other similar means requiring the use of tools to hold them closed, but shall be provided with a catch or spring latch.

8.3.9 A spring latch, a magnetic latch, a dimple or any other mechanical arrangement that will hold the door in place and would require some effort on the user's part to open, is an acceptable means for holding the door in place as required in 8.3.8.

8.3.10 A door or cover giving direct access to fuses in other than low-voltage circuits shall shut closely against a 1/4 inch (6.4 mm) rabbet or the equivalent, or shall have either turned flanges for the full length of four edges or angle strips fastened to it. Flanges or angle strips shall fit closely with the outside of the wall of the box proper and shall overlap the edges of the box not less than 1/2 inch (12.7 mm). A

AVA Documents
Document Sharing Hub
Full document details: UL 2790 2019

construction which affords equivalent protection, such as a fuse enclosure within an outer enclosure, or a combination of flange and rabbet, is acceptable.

8.3.11 Strips used to provide rabbets, or angle strips fastened to the edges of a door, shall be secured at not less than two points, not more than 1-1/2 inches (41.1 mm) from each end of each strip and at points between these end fastenings not more than 6 inches (152 mm) apart.

8.3.12 A plate or plug for an unused conduit opening or other hole in the enclosure shall have a thickness not less than:

a) 0.014 inch (0.36 mm) for steel or 0.019 inch (0.48 mm) for nonferrous metal for a hole having a 1/4 inch (6.4 mm) maximum dimensions; and

b) 0.027 inch (0.68 mm) for steel or 0.032 inch (0.81 mm) for nonferrous metal for a hole having a 1-3/8 inch (34.9 mm) maximum dimensions.

A closure for a larger hole shall have a thickness equal to that required for the enclosure of the device or a standard knockout seal shall be used. Such plates or plugs shall be securely mounted.

8.3.13 An electron tube or similar glass-enclosed device shall be protected against mechanical damage.

8.4 Field wiring system connection

8.4.1 If threads for the connection of conduit are tapped all the way through a hole in an enclosure wall, or if an equivalent construction is employed, there shall be not less than three nor more than five threads in the metal, and the construction of the device shall be such that a conduit bushing can be attached.

8.4.2 If threads for the connection of conduit are not tapped all the way through a hole in an enclosure wall, conduit hub, or the like, there shall be not less than 3-1/2 threads in the metal and there shall be a smooth, rounded inlet hole for the conductors which shall afford protection to the conductors equivalent to that provided by a standard conduit bushing and which shall have an internal diameter approximately the same as that of the corresponding trade size of rigid conduit.

8.4.3 An enclosure threaded for support by rigid conduit shall provide at least five full threads for engaging with the conduit.

8.4.4 A knockout in a sheet metal enclosure shall be capable of being removed without undue deformation of the enclosure.

8.4.5 A knockout shall be provided with a flat surrounding surface for seating of a conduit bushing, and shall be so located that installation of a bushing at any knockout likely to be used during installation will not result in spacings between uninsulated live parts and the bushing of less than those required.

9 Field Wiring

9.1 General

9.1.1 Provision shall be made for connection of a wiring system that would be suitable for power supply in accordance with the National Electrical Code, NFPA 70.

9.1.2 The location of an outlet box or compartment in which field wiring connections are to be made shall be such that these connections may be inspected after the equipment is installed as intended.

Documents
Document Sharing Hub
Full document details: UL 2790 2019

9.1.3 The connections shall be accessible without removing parts other than a service cover or panel and the cover of the outlet box or compartment in which the connections are made. A component intended for use as the cover of an outlet box or compartment may serve as a cover.

9.1.4 The size of a junction box in which field-installed conductors are to be connected by splicing shall be not less than that indicated in Table 9.1. A conductor passing through the box is counted as one conductor, and each conductor terminating in the box is also counted as one conductor. A field-furnished conductor for high-voltage circuits is considered to be not smaller than 14 AWG (2.1 mm^2).

Table 9.1
Size of junction boxes

Size of conductor AWG (mm^2)	Free space within box for each conductor, cubic inches (cm^3)
16 or smaller (1.3 or less)	1.5 (24.6)
14 (2.1)	2.0 (32.8)
12 (3.3)	2.25 (36.9)
10 (5.3)	2.5 (41.0)
8 (8.3)	3.0 (49.2)

9.1.5 A knockout for connection of a field wiring system to a terminal box or compartment shall accommodate conduit of the trade size determined by applying Table 9.2.

Table 9.2
Trade size of conduit in inches[a]

Wire size		Number of wires				
AWG	(mm^2)	2	3	4	5	6
14	(2.1)	1/2	1/2	1/2	1/2	1/2
12	(3.3)	1/2	1/2	1/2	3/4	3/4
10	(5.3)	1/2	1/2	1/2	3/4	3/4
8	(8.4)	3/4	3/4	1	1	1-1/4
6	(13.3)	3/4	1	1	1-1/4	1-1/4
4	(21.1)	1	1	1-1/4	1-1/4	1-1/2
3	(26.7)	1	1-1/4	1-1/4	1-1/2	1-1/2
2	(33.6)	1	1-1/4	1-1/4	1-1/2	2
1	(42.4)	1-1/4	1-1/4	1-1/2	2	2
0	(53.5)	1-1/4	1-1/2	2	2	2-1/2
2/0	(67.4)	1-1/2	1-1/2	2	2	2-1/2
3/0	(85.0)	1-1/2	2	2	2-1/2	2-1/2
4/0	(107.2)	2	2	2-1/2	2-1/2	3

[a] This table is based on the assumption that all conductors will be of the same size and there will be no more than six conductors in the conduit. If more than six conductors will be involved or if all of them are not of the same size, the internal cross-sectional area of the smallest conduit that may be used is determined by multiplying by 2.5 the total cross-sectional area of the wires, based on the cross-sectional area of type THW wire.

9.1.6 Wiring exterior to an appliance assembly between the burner assembly and a limit control, a primary safety control, or a motor controller, that can be done readily with a wire enclosed in conduit or with metal-clad cable in accordance with the National Electrical Code, NFPA 70, need not be furnished by

AVA Documents
Document Sharing Hub
Full document details: UL 2790 2019

the manufacturer as part of the appliance assembly if adequate instructions for installing such wiring are furnished with each appliance assembly. See 9.1.4.

9.1.7 A box or enclosure, included as part of the assembly and in which a branch circuit supplying power to the appliance assembly is to be connected, shall not require that it be moved for normal care of the unit. This requirement does not apply to separate limit controls and stack switches, where permitted, to which metal-clad cable or flexible metallic conduit is to be directly attached.

9.1.8 A box or enclosure in which field installed conductors are to be connected as indicated in 9.1.5 – 9.1.7, and 9.1.9 shall be so located that the temperature of conductors within the box or surfaces of the box likely to be in contact with the conductors will not exceed that specified for a wire having a 140°F (60°C) temperature rating when the assembly is tested in accordance with these requirements.

9.1.9 Except as otherwise permitted by 15.3.1, wiring to be done in the field between the assembly and devices not attached to the appliance assembly or between separate devices which are field installed and located, shall conform to these requirements if done with a 140°F (60°C) rated wire enclosed in suitable conduit or metal-clad cable.

9.1.10 The wiring of the appliance may terminate in a length of flexible metal conduit with an outlet box, control box, or equivalent enclosure intended for connection of the product to the wiring system specified in 9.1.1. If the conduit terminates in an outlet box larger than 4 by 4 by 2 inches (102 by 102 by 51 mm) for splice connection, locknuts on the fittings are not acceptable as a means to prevent loosening of the conduit fittings. A grounding conductor of the size specified in the National Electrical Code, NFPA 70, shall be included unless:

a) The total length of flexible metal conduit of any ground return path in the product is not more than 6 feet (1.83 m);

b) No circuit conductor protected by an overcurrent-protective device rated at more than 20 amperes is included; and

c) The conduit is no larger than 3/4 inch trade size, or the fittings for the conduit are identified as providing grounding.

9.2 Leads and terminals

9.2.1 Wiring terminals or leads not less than 6 inches (152 mm) long for connection of field-wiring conductors of at least the size required by the National Electrical Code, NFPA 70, corresponding to the marked rating of the assembly shall be provided.

9.2.2 Leads may be less than 6 inches (152 mm) in length if it is evident that the use of a longer lead might result in a risk of fire, electric shock, or injury to persons.

9.2.3 Leads intended for connection to an external circuit shall be provided with strain relief if stress on the lead may be transmitted to terminals, splices, or internal wiring which may cause the lead to separate from its termination or result in damage to the lead from sharp edges. Each lead shall be capable of withstanding a pull of 10 pounds (44.5 N) for 1 minute without damage to the assembly.

9.2.4 An identified (grounded) terminal or lead shall not be electrically connected to a single-pole manual switching device which has an OFF position or to a single-pole overcurrent (not thermal) protective device.

9.2.5 At terminals, stranded conductors shall be prevented from contacting other uninsulated live parts and from contacting dead metal parts. This may be accomplished by use of pressure-terminal connectors, soldering lugs, crimped eyelets, soldering all strands of the wire together, or equivalent means. An open slot-type connector shall not be used unless it is constructed to reduce the likelihood of disconnection

AVA Documents
Document Sharing Hub

resulting from loosening of the clamping means. The shanks of terminal connectors shall be protected by insulating tubing, or the equivalent, if the required spacings may be reduced as a result of loosening of the clamping means. The thickness of the insulation on the shanks shall be not less than 0.028 inch (0.71 mm).

9.2.6 Field wiring terminals shall be secured to their supporting surfaces by methods other than friction between surfaces so that they will be prevented from turning or shifting in position if such motion may result in reduction of spacings to less than those required. This may be accomplished by two screws or rivets; by square shoulders or mortices; by a dowel pin, lug, or offset; by a connecting strap or clip fitted into an adjacent part; or by some other equivalent means.

9.2.7 Conductors intended for connection to a grounded neutral line shall be identified, that is, finished a white or gray color. All other current-carrying conductors visible to the installer shall be finished in colors other than white, gray, or green. A terminal for connection of a grounded conductor shall be identified by a metallic-plated coating, substantially white in color and shall be readily distinguishable from other terminals, or it shall be identified in some other manner, such as on an attached wiring diagram.

9.2.8 Leads provided for spliced connections to an external high-voltage circuit shall not be connected to wire-binding screws or pressure terminal connectors, located in the same compartment as the splice or visible to the installer, unless the screws or connectors are rendered unusable for field wiring connections or the leads are insulated at the unconnected ends.

9.2.9 Terminal parts by which field-wiring connections are made shall consist of soldering lugs or pressure terminal connectors secured in place in accordance with the requirements in 9.2.5, except that for 10 AWG (5.3 mm^2) and smaller wires, the parts to which wiring connections are made may consist of clamps or wire binding screws with cupped washers, terminal plates having upturned lugs, or the equivalent, to hold the wire in position.

9.2.10 A wire binding screw at a high-voltage wiring terminal for field connection shall not be smaller than No. 10 (4.8 mm major diameter).

Exception No. 1: A No. 8 (4.2 mm major diameter) screw may be used for the connection of a conductor not larger than 14 AWG (2.1 mm^2).

Exception No. 2: A No. 6 (3.5 mm major diameter) screw may be used for the connection of a 16 or 18 AWG (1.3 or 0.82 mm^2) control-circuit conductor.

9.2.11 A terminal plate for a wire binding screw shall be of metal not less than 0.030 inch (0.76 mm) in thickness for a 14 AWG (2.1 mm^2) or smaller wire, and not less than 0.050 inch (1.27 mm) in thickness for a wire larger than 14 AWG (2.1 mm^2); and in either case there shall be not less than two full threads in the metal.

9.2.12 A terminal plate formed from stock having the minimum required thickness may have the metal extruded at the tapped hole for the binding screw so as to provide two full threads.

9.2.13 A wire binding screw shall thread into metal.

10 Internal Wiring

10.1 General

10.1.1 The wiring of high-voltage circuits shall conform to the requirements in this Section.

Documents
Document Sharing Hub
Full document details: UL 2790 2019

10.1.2 Wiring shall be done with insulated conductors having current carrying capacity, voltage, and temperature ratings consistent with their use. A conductor, other than an integral part of a component, shall be not smaller than 18 AWG (0.82 mm^2).

10.1.3 Except as indicated in 10.2.2, the wiring for each device assembly circuit shall be furnished by the manufacturer as part of the burner assembly.

10.1.4 If insulated conductors rated for use at temperatures in excess of 140°F (60°C) are required, such wiring shall be furnished as part of the assembly and the devices to be connected by such wiring shall be factory-located on the equipment.

10.2 Methods

10.2.1 Electrical wiring to a part which must be moved for normal maintenance and servicing shall be arranged so that the part may be moved without breaking soldered connections or disconnecting conduit. Conductors to be disconnected from terminals of such part shall terminate in eyelets or connectors. If the wiring to a part which functions also as an access plate or cover, that is, a transformer closing the access to the nozzle assembly, is not readily detachable, the assembly shall include provision for support of that part by means other than the wiring when the part is moved for servicing. Any allowable movement of such part shall not unduly twist, bend, or pull the wiring.

10.2.2 Conductors shall be enclosed within conduit, electrical metallic tubing, metal raceway, electrical enclosure, or metal-clad cable, except as permitted by 10.2.15.

Exception: Factory wiring involving a potential of not more than 300 volts between parts attached to the same assembly with a predetermined fixed relationship one to the other may be done with Type SO or ST cord, provided all of the following conditions are fulfilled:

a) It is not practical to do the wiring in accordance with 10.2.2;

b) The cord is not required to be bent, twisted, or otherwise displaced to render normal maintenance and service; and

c) The length of cord exterior to the assembly is not more than 4 inches (102 mm) and strain relief is provided.

10.2.3 Group A of Table 10.1 includes some wiring materials suitable for use if enclosed as indicated in 10.2.2.

Table 10.1
Typical wiring materials

Group	Type of wire, cord, or appliance wiring material with insulation thickness shown at the right corresponding to wire sizes indicated	Wire size		Insulation thickness	
		AWG	(mm^2)	Inch	(mm)
A	FFH-2, TF, TFF, TFN, TFFN, SF-2, SFF-2, RH, RHH, RHW, T, THW, XHHW, MTW, THWN, TW, PF, PFF, PGF, PGFF, RFH-2, RFHH-2, RFHH-3 or thermoplastic appliance wiring material.	10 and smaller	(5.3)	2/64	(0.8)
		8	(8.3)	3/64	(1.2)
		6	(13.3)	4/64	(1.6)
		4	(21.2)	4/64	(1.6)
		3	(25.7)	4/64	(1.6)

Table 10.1 Continued on Next Page

Documents
Document Sharing Hub
Full document details: UL 2790 2019

Table 10.1 Continued

Group	Type of wire, cord, or appliance wiring material with insulation thickness shown at the right corresponding to wire sizes indicated	Wire size		Insulation thickness	
		AWG	(mm^2)	Inch	(mm)
		2	(33.6)	4/64	(1.6)
		1	(42.4)	5/64	(2.0)
		1/0	(53.5)	5/64	(2.0)
		2/0	(67.4)	5/64	(2.0)
		3/0	(85.0)	5/64	(2.0)
		4/0	(107.0)	5/64	(2.0)
B	SEO, SEOO, SJE, SJEO, SO, ST, SJO, SJT, S, SE, SJ, SJOO, SJTO, SJTOO, SOO, STO, STOO, or appliance wiring material with thermoplastic or neoprene insulation	18	(0.82)	4/64	(1.8)
		16	(1.3)	4/64	(1.6)
		14	(2.1)	5/64	(2.0)
		12	(3.3)	5/64	(2.0)
		10	(5.3)	5/64	(2.0)
		8	(8.3)	6/64	(2.4)
		6	(13.3)	8/64	(3.2)

Thermoplastic wiring materials, as referenced in group A, with insulation thickness of 2/64 inch (0.8 mm) for 16 or 18 AWG (1.3 or 0.82 mm^2) and 3/64 inch (1.2 mm) for 14, 12, 10, or 8 AWG (2.1, 3.3, 5.3, or 8.3 mm^2), are considered equivalent to the wiring material referenced in group B, when the conductors are covered with 1/32 inch (0.8 mm) wall thickness thermoplastic insulating tubing of a type suitable for the purpose from the standpoint of dielectric properties, heat resistance, moisture-resistance, flammability, and the like.

10.2.4 Flexible metal conduit, if used, shall be not smaller than 3/8 inch (9.5 mm) electrical trade size. This does not apply to parts of components, such as conduit protecting flame sensor leads.

10.2.5 Flexible metal conduit shall be mechanically secured at intervals not exceeding 4-1/2 feet (1.37 m) and within 12 inches (305 mm) on each side of every junction box except for lengths not over 36 inches (914 mm) where flexibility is necessary.

10.2.6 All splices and connections shall be mechanically secure and bonded electrically. A soldered connection shall be made mechanically secure before being soldered if breaking or loosening of the connection may result in risk of fire, electric shock, or injury to persons.

10.2.7 A splice shall be provided with insulation equivalent to that required for the wires involved if permanence of spacing between the splice and other metal parts is not ensured.

10.2.8 A splicing device, such as a fixture-type splicing connector, pressure wire connector, and the like, may be employed if the device has insulation suitable for the voltage to which it is subjected. Thermoplastic tape wrapped over a sharp edge is not acceptable.

10.2.9 Each splice shall be enclosed by being installed in a junction box, control box, or other compartment in which high-voltage wiring materials may be employed.

10.2.10 Splices shall be located, enclosed, and supported so that they are not subject to damage, flexing, motion, or vibration.

10.2.11 A splice is considered to be adequately enclosed when installed in a junction box, control box, or other enclosed compartment in which wiring materials, as specified in Group A of Table 10.1, may be

AVA Documents
Document Sharing Hub
Full document details: UL 2790 2019

employed. Splices in enclosed machinery compartments are to be secured to a fixed member in the compartment so that they are not subject to movement or damage during servicing.

10.2.12 At all points where conduit or metal tubing terminates, the conductor shall be protected from abrasion. If metal-clad cable is used, an insulating bushing or its equivalent shall be provided between the conductors and the metal cladding, and the connector or clamp shall be of such design that the insulating bushing or its equivalent will be visible for inspection.

10.2.13 A wireway shall be such that the interconnection of sections and fittings will provide a rigid mechanical assembly and ensure electrical conductivity. The interior of the wireway shall be free from burrs and sharp corners or edges which might cause damage to the insulation on wires.

10.2.14 All wiring shall be supported and routed to prevent damage due to sharp edges or moving parts.

10.2.15 Cords or appliance wiring material as referenced in Group B of Table 10.1 may be employed if the wiring is enclosed by a casing or compartment conforming to all of the following:

a) There are no openings in the bottom, unless a U-shaped channel or trough is located under the wiring and the wires do not project through the plane of the top of the trough or channel;

b) If the appliance is for installation only on noncombustible flooring, the bottom of such compartment may be open provided all sides of the compartment extend to the floor level;

c) Louvers or openings in other than the bottom will not permit entrance of a rod having a diameter of 1/2 inch (12.7 mm), and openings for such items as pipe or conduit are not more than 1/2 inch in diameter larger than the object that will be installed through the opening;

d) Openings are not closer than 6 inches (152 mm) to the wiring unless metallic barriers or baffles are placed between the wiring and the openings; and

e) Combustible material, other than electrical insulation, located within the casing or compartment is separated from such wiring material.

10.2.16 With reference to 10.2.15(e), plastic materials shall be classified as Type V-0, V-1, V-2, 5V, HF-1, or HF-2 in accordance with requirements in the Standard for Tests for Flammability of Plastic Materials for Parts in Devices and Appliances, UL 94, and other nonmetallic materials shall have equivalent characteristics.

10.2.17 Cords and other wiring material permitted in accordance with 10.2.15 shall be arranged to avoid being physically damaged, such as by closely following surfaces, and shall be supported. Strain relief, where required, shall be provided.

10.2.18 Holes in walls or partitions through which insulated wires or cords pass and on which they may bear shall be provided with smoothly rounded bushings or surfaces upon which the wires or cords may bear, to prevent abrasion of the insulation. Bushings, if required, shall be ceramic, phenolic, cold-molded composition, fiber, or equivalent material.

10.2.19 A fiber bushing shall be not less than 3/64 inch (1.2 mm) in thickness, shall be so located that it will not be exposed to moisture, and shall not be employed where it will be subjected to a temperature higher than 194°F (90°C) under normal operating conditions.

10.2.20 To provide an acceptable unbushed opening in sheet metal, not requiring a bushing, usually requires roll or extrusion of the metal around the opening, or both, or the insertion of a grommet conforming to 10.2.18.

Documents
Document Sharing Hub
Full document details: UL 2790 2019

10.3 Short-circuit protection

10.3.1 Conductors of motor circuits having two or more motors, one or more of which are thermal or overcurrent protected and wired for connection to one supply line shall withstand the conditions of a short-circuit test without creating a risk of fire or electric shock. See Short-Circuit Test, Section 61.

Exception: Conductors that conform to the following are considered acceptable without test:

a) Conductors that have not less than one-third the ampacity of the required branch-circuit conductors; or

b) Conductors that are 18 AWG (0.82 mm^2) or larger and not more than 4 feet (1.2 m) in length provided that the circuit will be protected by a fuse or HACR Type circuit breaker rated 60 amperes or less as specified on the product nameplate or provided as part of the product and acceptable for branch-circuit protection. This applies to any of the wiring materials specified in this standard, including those enclosed those enclosed in raceways; or

c) Conductors that serve as jumper leads between controls providing the length of the leads does not exceed 3 inches (76 mm) or the conductors are located in a control panel.

10.3.2 Factory wiring of a low-voltage safety circuit may be done with SP-2 cord having all-neoprene insulation, SPT-2 cord or appliance wiring material having neoprene, thermoplastic, or equally durable insulation of equivalent thickness, or power limited circuit cable, if such wiring is located in a cavity or compartment of an appliance and is adequately shielded from harm.

11 Separation of Circuits

11.1 Unless provided with insulation for the highest voltage involved, insulated conductors of different internal wiring circuits shall be separated by barriers or shall be segregated; and shall also be so separated or segregated from uninsulated live parts connected to different circuits or opposite-polarity parts of the same circuit.

11.2 Segregation of insulated conductors may be accomplished by clamping, routing, or equivalent means which provides permanent separation from insulated or uninsulated live parts of a different circuit.

11.3 Field-installed conductors of any circuit shall be segregated or separated by barriers from:

a) Field-installed and factory-installed conductors connected to any other circuit, unless the conductors of both circuits are insulated for the maximum voltage of either circuit;

b) Uninsulated live parts of any other circuit; and

c) Any uninsulated live parts whose short-circuiting may permit operation of the appliance that may result in a risk of fire, electric shock, or injury to persons except that a construction in which field-installed conductors may make contact with wiring terminals is acceptable, provided that conductors having insulation at least equivalent to those referenced in group A of Table 10.1 are or will be installed when wired in accordance with the National Electrical Code, NFPA 70.

11.4 Segregation between field installed conductors and from uninsulated live parts connected to different circuits may be accomplished by arranging the location of the openings in the enclosure for the various conductors, with respect to the terminals or other uninsulated live parts, so that there is no likelihood of the intermingling of the conductors or parts of different circuits. If:

a) The number of openings in the enclosure does not exceed the minimum required for proper wiring and if each opening is located opposite a set of terminals, it is to be assumed, for the

AVA Documents
Document Sharing Hub
Full document details: UL 2790 2019