UL 283

STANDARD FOR SAFETY

Air Fresheners and Deodorizers

Documents
Document Sharing Hub

Full document details: UL 283 2021

Documents
Document Sharing Hub

Full document details: UL 283 2021

UL Standard for Safety for Air Fresheners and Deodorizers, UL 283

Third Edition, Dated June 16, 2015

Summary of Topics

This revision of ANSI/UL 283 dated April 29, 2021 includes the withdrawal and replacement of UL 508C with UL 61800-5-1; 6.5.4.1 and 6.13.4.4

Text that has been changed in any manner or impacted by UL's electronic publishing system is marked with a vertical line in the margin.

The revised requirements are substantially in accordance with Proposal(s) on this subject dated February 5, 2021.

All rights reserved. No part of this publication may be reproduced, stored in a retrieval system, or transmitted in any form by any means, electronic, mechanical photocopying, recording, or otherwise without prior permission of UL.

UL provides this Standard "as is" without warranty of any kind, either expressed or implied, including but not limited to, the implied warranties of merchantability or fitness for any purpose.

In no event will UL be liable for any special, incidental, consequential, indirect or similar damages, including loss of profits, lost savings, loss of data, or any other damages arising out of the use of or the inability to use this Standard, even if UL or an authorized UL representative has been advised of the possibility of such damage. In no event shall UL's liability for any damage ever exceed the price paid for this Standard, regardless of the form of the claim.

Users of the electronic versions of UL's Standards for Safety agree to defend, indemnify, and hold UL harmless from and against any loss, expense, liability, damage, claim, or judgment (including reasonable attorney's fees) resulting from any error or deviation introduced while purchaser is storing an electronic Standard on the purchaser's computer system.

Documents
Document Sharing Hub

Full document details: UL 283 2021

No Text on This Page

Documents
Document Sharing Hub

Full document details: UL 283 2021

JUNE 16, 2015
(Title Page Reprinted: April 29, 2021)

ANSI/UL 283-2021

UL 283

Standard for Air Fresheners and Deodorizers

First Edition – March, 2004
Second Edition – March, 2008

Third Edition

June 16, 2015

This ANSI/UL Standard for Safety consists of the Third edition including revisions through April 29, 2021.

The most recent designation of ANSI/UL 283 as an American National Standard (ANSI) occurred on April 29, 2021. ANSI approval for a standard does not include the Cover Page, Transmittal Pages, and Title Page.

Comments or proposals for revisions on any part of the Standard may be submitted to UL at any time. Proposals should be submitted via a Proposal Request in UL's On-Line Collaborative Standards Development System (CSDS) at https://csds.ul.com.

UL's Standards for Safety are copyrighted by UL. Neither a printed nor electronic copy of a Standard should be altered in any way. All of UL's Standards and all copyrights, ownerships, and rights regarding those Standards shall remain the sole and exclusive property of UL.

COPYRIGHT © 2021 UNDERWRITERS LABORATORIES INC.

Documents
Document Sharing Hub

Full document details: UL 283 2021

No Text on This Page

Documents
Document Sharing Hub

Full document details: UL 283 2021

CONTENTS

INTRODUCTION

1 Scope 7
2 Units of Measurement 7
3 Undated References 7
4 Glossary 7

CONSTRUCTION

5 General 11
6 Components 11
6.1 General 11
6.2 Attachment plugs, receptacles, connectors, and terminals 12
6.3 Batteries and battery chargers 13
6.4 Capacitors and filters 13
6.5 Controls 14
6.6 Cords, cables, and internal wiring 16
6.7 Film-coated wire (magnet wire) 16
6.8 Gaskets and seals 17
6.9 Heaters and heating elements 17
6.10 Insulation systems 17
6.11 Light sources and associated components 17
6.12 Marking and labeling systems 18
6.13 Motors and motor overload protection 18
6.14 Overcurrent protection 20
6.15 Polymeric materials and enclosures 21
6.16 Power supplies 21
6.17 Printed-wiring boards 21
6.18 Semiconductors and small electronic components 21
6.19 Supplemental insulation, insulating bushings, and assembly aids 22
6.20 Switches 22
6.21 Transformers 23
6.22 Valves (electrically operated) and solenoids 23
7 Frame and Enclosure 24
7.1 General 24
7.2 Non-metallic parts other than enclosures 28
8 Mechanical Assembly 30
9 Protection Against Corrosion 31
10 Accessibility of Uninsulated Current-Carrying Parts, Film-Coated Wire, and Moving Parts 31
11 Supply Connections 37
11.1 Cord-connected appliances 37
11.2 Direct plug-in type appliances 41
12 Current-Carrying Parts 44
13 Insulating Material 44
14 Internal Wiring – Electrical Connections 45
14.1 Mechanical protection 45
14.2 Splices and connections 46
15 Separation of Circuits 46
16 Capacitors 46
17 Grounding 47
17.1 General 47
17.2 Grounding identification 48
18 Heating Elements 48

AVA Documents
Document Sharing Hub
Full document details: UL 283 2021

19 Lampholders 48
20 Motors 48
20.1 Construction 48
20.2 Brush wear out 49
20.3 Overload protection 49
21 Overload- or Thermal-Protective Devices 51
22 Receptacles 52
23 Switches and Controls 52
24 Controls – End Product Test Parameters 52
24.1 General 52
24.2 Auxiliary controls 53
24.3 Operating controls (regulating controls) 53
24.4 Protective controls (limiting controls) 54
24.5 Controls using a temperature sensing device 56
25 Spacings 56
26 Seals and Gaskets 57
27 Consumables 58
28 Fragrances 58
29 Transformers 59
30 Secondary Circuits 59
30.1 General 59
30.2 Difference between the level of testing required within each type of secondary circuit ... 59
30.3 Class 2 circuit requirements 60
30.4 Limited voltage/current circuit requirements 60
30.5 Limited energy circuit requirements 61
30.6 Limiting impedance circuit requirements 62
31 Printed-Wiring Boards 62
32 Electronic Circuits 63
33 Insulation Systems 63
34 Protection Against Injury to Person 64
34.1 General 64
34.2 Sharp edges 64
34.3 Enclosures and guards 65
34.4 Rotating or moving members 68
34.5 Switches, controls, and interlocks 68
34.6 Hot liquids 69

PERFORMANCE

35 General 69
36 Leakage-Current Test 69
37 Test of Insulation Resistance and Leakage-Current as a Result of Moisture 73
38 Humidity Conditioning Test 73
39 Input Test 74
40 Temperature Test 74
40.1 All appliances 74
40.2 Surface temperature 78
41 Dielectric Voltage-Withstand Test 79
42 Flooding of Current-Carrying Parts Test 80
43 Test for Deterioration of Parts Subject to Flexing 80
44 Test for Reliability of Parts Not Subject to Flexing 81
45 Grounding Continuity Test 82
46 Tests on Switches and Controls 82
47 Strain-Relief Test 82
48 Abnormal Operation Test 83
49 Operational Test 85

AVA Documents
Document Sharing Hub
Full document details: UL 283 2021

50 Permanence of Marking Test 85
51 Stability Test 87
52 Tip-Over Test 87
53 Consumables 88
53.1 Flash point test 88
53.2 Flame ignition test 88
54 Impeller Ignition Test 90
55 Unguarded Impeller Test 91
56 Blade Security Test 91
57 Endurance Test 91
58 Torque Test 92
59 Mold Stress-Relief Distortion Test 92
60 Cap Pull Test 93
61 Impact Test 93
61.1 General 93
61.2 Ball impact test 94
61.3 Drop impact on direct plug-in units 97
61.4 Drop impact test 97
61.5 Rod pressure on direct plug-in units 97
61.6 Resistance to crushing on direct plug-in units 98
62 Resistance to Deterioration Test 98
63 Push Back Relief Test 99
64 Overspeed Test 99
65 Secondary Circuit Voltage and Current Measurement Test 99
66 Liquid Tight Tests for Containers Employing Wicks 100
67 Solenoids 100
68 Thermoplastic motor insulation systems 101
68.1 General 101
68.2 Abnormal conditioning 101
68.3 Overload-burnout conditioning 102
68.4 Thermal aging 102

MANUFACTURING AND PRODUCTION TESTS

69 Dielectric Voltage-Withstand Test 103
70 Grounding Continuity Test 105

RATINGS

71 Details 105

MARKINGS

72 Details 105
72.1 General 105
72.2 Cord-connected appliances 107

INSTRUCTIONS

73 Details 107

Documents
Document Sharing Hub
Full document details: UL 283 2021

No Text on This Page

Documents
Document Sharing Hub

Full document details: UL 283 2021

INTRODUCTION

1 Scope

1.1 These requirements cover household and commercial air fresheners and deodorizers, rated 250 volts or less for use in ordinary locations in accordance with the National Electrical Code, ANSI/NFPA 70.

1.2 These requirements cover air fresheners and deodorizers for deodorizing or scenting air, or both, by the dispersal of chemicals, fragrances, or both. Air fresheners and deodorizers employing heating elements, electronic circuits, motor-operated fans (or a combination thereof), and mechanical filters are also covered by these requirements.

1.3 These requirements are intended to evaluate these appliances with respect to the risk of fire, electric shock, injury to persons, and explosiveness of atmosphere. The physiological effects of the operation of these appliances, beneficial or otherwise, are not covered by this Standard. The assigned ratings do not cover other potential risks, including the physiological effects of these appliances, in any form, nor do they indicate the efficiency or effectiveness of the intended uses of these appliances.

1.4 These requirements do not cover insect-repellent dispensers, air sterilizing appliances, air cleaning products, air filters, room ionizers, smoke scrubbers, or ultraviolet filters.

1.5 These requirements do not cover permanently-connected appliances.

1.6 These requirements do not cover direct plug-in appliances with open reservoirs for the addition of either a liquid or a substance that when heated becomes a liquid.

1.7 Direct plug-in air fresheners and deodorizers provided with illumination shall be additionally evaluated to the Standard for Direct Plug-In Nightlights, UL 1786.

1.8 Electric toys are covered by the Standard for Electric Toys, UL 696.

1.9 Electric toy transformers are covered by the Standard for Toy Transformers, UL 697.

2 Units of Measurement

2.1 Values stated without parentheses are the requirement. Values in parentheses are explanatory or approximate information.

3 Undated References

3.1 Any undated reference to a code or standard appearing in the requirements of this standard shall be interpreted as referring to the latest edition of that code or standard.

4 Glossary

4.1 For the purpose of this Standard, the following definitions apply.

4.2 AIR DEODORIZER – An appliance that is intended to treat the air in a relatively small area by the dispersal of chemicals, fragrances, or both. Some appliances employ a mechanical filter.

4.3 AIR FRESHENER – An appliance that is intended to scent the air in a relatively small area by the dispersal of chemicals, fragrances, or both. Some appliances employ a mechanical filter.

Documents
Document Sharing Hub
Full document details: UL 283 2021

4.4 APPLIANCE COUPLER – A single-outlet, female contact device for attachment to a flexible cord as part of a detachable power-supply cord to be connected to an appliance inlet (motor attachment plug).

4.5 APPLIANCE INLET (Motor Attachment Plug) – A male contact device mounted on an end product appliance to provide an integral blade configuration for the connection of an appliance coupler or cord connector.

4.6 APPLIANCE (FLATIRON) PLUG – An appliance coupler type of device having a cord guard and a slot configuration specified for use with heating or cooking appliances.

4.7 APPRECIABLY DEPLETED – A reduction in total consumable volume of greater than 15 percent during operation of the unit over the entire life of the fragrance a stated by the manufacturer.

4.8 ASKAREL – A generic term for a group of nonflammable synthetic chlorinated hydrocarbons used as electrical insulating media. Askarels of various compositional types are used. Under arcing conditions the gases produced, while consisting predominantly of noncombustible hydrogen chloride, can include varying amounts of combustible gases depending upon the askarel type.

4.9 AUTOMATICALLY CONTROLLED APPLIANCE – An appliance is considered to be automatically controlled if:

a) The repeated starting of the appliance, beyond one complete predetermined cycle of operation to the point where some form of limit switch opens the circuit, is independent of any manual control;

b) During any single predetermined cycle of operation, the motor is caused to stop and restart one or more times;

c) Upon energizing the appliance, the initial starting of the motor is capable of being intentionally delayed beyond normal, conventional starting; or

d) During any single predetermined cycle of operation, automatic changing of the mechanical load is capable of reducing the motor speed to the degree required to reestablish starting-winding connections to the supply circuit.

4.10 CHILD-APPEALING FEATURE – A feature that has entertaining audio or visual effects, or that depicts (logos, decals, art work, etc.) or resembles in physical form or function articles commonly recognized as appealing to or intended for use by children under 5 years of age. This includes, but is not limited to, features that depict or resemble cartoon characters, toys, guns, watches, musical instruments, vehicles, toy animals, food or beverages, or that play musical notes or have flashing lights or other entertaining features.

For features that do not depict or resemble the items listed above, the following additional factors will be considered in determining whether a direct plug-in air freshener or deodorizer has a feature that is commonly recognized as one that is designed or intended primarily to provide visual appeal and attraction to children ages 5 and under:

a) The manufacturer's intent to market the product with visual appeal and attraction to, and with the intent to invite or entice interaction by, children under 5 years of age, as evidenced by a review of any of the following:

1) Product labeling,

2) Product packaging (for example, depictions of the product being used in children's rooms, or being handled directly by children),

3) Advertising materials,

Documents
Document Sharing Hub
Full document details: UL 283 2021

4) Promotional materials,

5) Other materials accompanying the product,

b) The nature of any designs or depictions on the product, or the nature of the design or the shape of a component of the product, based on a consideration of the following:

1) Whether the designs or depictions, or the design or shape of the component, reflects a seasonal or holiday theme commonly recognized as appealing to adults and commonly recognized as being consistent with trends in the marketplace for seasonally-themed merchandise for the home; or

2) Whether the designs or depictions, or the design or shape of the component, reflects an embellishment or motif that is commonly recognized as appealing primarily to children under the age of 5, and not intended for mass appeal to both adults and children.

4.11 COMPONENT – A device or fabricated part of the appliance covered by the scope of a safety standard dedicated to the purpose. When incorporated in an appliance, equipment otherwise typically field installed (e. g. luminaire) is considered to be a component. Unless otherwise specified, materials that compose a device or fabricated part, such as thermoplastic or copper, are not considered components.

4.12 CONSUMABLE – A substance that is depletable, disposable, or both, in any form that remains or transforms through operation into pellets, gel, or liquid, that either functions in conjunction with an accessory that attaches to the appliance (that is, deodorizer or air freshener), or is directly inserted into the appliance.

4.13 CONTAINER – A receptacle in which the consumable is held or carried during use in the appliance.

4.14 CONTROL, AUTOMATIC ACTION – A control in which at least one aspect is non-manual.

4.15 CONTROL, AUXILIARY – A device or assembly of devices that provides a functional utility, is not relied upon as an operational or protective control, and therefore is not relied upon for safety. For example, an efficiency control not relied upon to reduce the risk of electric shock, fire, or injury to persons during normal or abnormal operation of the end product is considered an auxiliary control.

4.16 CONTROL, MANUAL – A device that requires direct human interaction to activate or rest the control.

4.17 CONTROL, OPERATING – A device or assembly of devices, the operation of which starts or regulates the end product during normal operation. For example, a thermostat, the failure of which a thermal cutout/limiter or another layer of protection would mitigate the potential hazard, is considered an operating control. Operating controls are also referred to as “regulating controls".

4.18 CONTROL, PROTECTIVE – A device or assembly of devices, the operation of which is intended to reduce the risk of electric shock, fire or injury to persons during normal and reasonably anticipated abnormal operation of the appliance. For example, a thermal cutout/limiter, or any other control/circuit relied upon for normal and abnormal conditions, is considered a protective control. Protective controls are also referred to as “limiting controls” and “safety controls”.

Note: During the evaluation of the protective control/circuit, the protective functions are verified under normal and single-fault conditions of the control.

4.19 CONTROL, TYPE 1 ACTION – The actuation of an automatic control for which the manufacturing deviation and the drift (tolerance before and after certain conditions) of its operating value, operating time, or operating sequence has not been declared and tested under this standard.

AVA Documents
Document Sharing Hub

Full document details: UL 283 2021

4.20 CONTROL, TYPE 2 ACTION – The actuation of an automatic control for which the manufacturing deviation and the drift (tolerance before and after certain conditions) of its operating value, operating time, or operating sequence have been declared and tested under this standard.

4.21 CORD CONNECTOR – A female contact device wired on flexible cord for use as an extension from an outlet to make a detachable electrical connection to an attachment plug or, as an appliance coupler, to an equipment inlet.

4.22 DIRECT PLUG-IN APPLIANCE – An appliance that has integral blades for direct insertion into a receptacle rated either 15 or 20 A, 125 V. Some appliances are provided with a polarized, parallel blade receptacle.

4.23 ENCLOSURE – That part of the appliance that:

a) Renders inaccessible all or any parts of the appliance that present a risk of electric shock or injury to persons due to total or partial collapse with a resulting reduction of spacings, loosening or displacement of parts, or serious defects, or

b) Retards propagation of flame initiated by electrical disturbances occurring within, or

c) Both (a) and (b).

4.24 FAN BLADE – A component of an impeller.

4.25 FLASH POINT – The minimum temperature of a liquid at which vapor is evolved in a large enough quantity to form a flammable mixture with air.

4.26 FRAGRANCE – Any consumable that is designed to produce a vapor that has an odor.

4.27 IMPELLER – An assembly of blades about an integral hub.

4.28 LOW VOLTAGE – Not greater than 30 Vrms or 42.4 V peak or 42.4 V dc.

4.29 MOUNTING MEANS – Hardware to mount the appliance to the building structure or to an outlet box.

4.30 OPERATING TEMPERATURE OF THE FRAGRANCE – The maximum temperature measured on the air freshener and deodorizer appliance in an area that is in direct contact with the vapor generated by the product for a liquid fragrance or at the container body in contact with the appliance for a gel pack.

4.31 PORTABLE APPLIANCE – A direct plug-in appliance or an appliance provided with a power-supply cord for connection to the supply circuit, that is capable of being easily moved by hand from place to place.

4.32 RESERVOIR – A vessel that holds the consumable in the appliance. The reservoir is intended to be refilled by the consumer during use of the appliance.

4.33 RISK OF ELECTRIC SHOCK – A risk of electric shock exists at any part when:

a) The potential between the path and earth ground or any other accessible part is more than 30 V rms (42.4 V peak); and

b) The continuous current flow through a 1500 ohm resistor connected across the potential exceeds 0.5 mA.

Documents
Document Sharing Hub
Full document details: UL 283 2021

4.34 SEAL – A component made of elastomers, composite gasket material, flexible cellular material, thermoplastics, and thermoplastic elastomers that exclude or hold within an enclosure consumables that are liquid, solid, or vapor.

4.35 STATIONARY APPLIANCE – A direct plug-in appliance or an appliance provided with a power-supply cord for connection to the supply circuit, that is intended to be fastened in place or located in a dedicated place.

4.36 USER SERVICING – Any form of servicing, such as routine cleaning and replacement of a fuse, lamp, or a consumable, that is performed by personnel other than those trained to maintain the appliance.

CONSTRUCTION

5 General

5.1 An appliance shall employ materials that are intended for the application.

5.2 Thermoplastic material used for a part of an appliance having any dimension (length, width or height) greater than 305 mm (12 in) shall be classified minimum HB.

6 Components

6.1 General

6.1.1 A component of a product covered by this standard shall:

a) Comply with the requirements for that component as indicated in 6.2 – 6.22 or the individual component section;

b) Be used in accordance with its rating(s) established for the intended conditions of use;

c) Be used within its established use limitations or conditions of acceptability;

d) Additionally comply with the applicable requirements of this end product standard; and

e) Not contain mercury.

Note: Specific components are incomplete in construction features or restricted in performance capabilities. Such components are intended for use only under limited conditions, such as certain temperatures not exceeding specified limits, and shall be used only under those specific conditions.

Exception No. 1: A component of a product covered by this standard is not required to comply with a specific component requirement that:

a) Involves a feature or characteristic not required in the application of the component in the product, or

b) Is superseded by a requirement in this standard, or

c) Is separately investigated when forming part of another component, provided the component is used within its established ratings and limitations.

Exception No. 2: A component complying with a UL component standard other than those cited in 6.2 – 6.22 is acceptable if:

Documents
Document Sharing Hub
Full document details: UL 283 2021

a) The component also complies with the applicable component standard of 6.2 – 6.22 or the individual component section; or

b) The component standard:

1) Is compatible with the ampacity and overcurrent protection requirements NFPA 70, where appropriate;

2) Considers long-term thermal properties of polymeric insulating materials in accordance with the Standard for Polymeric Materials – Long Term Property Evaluations, UL 746B; and

3) Any use limitations of the other component standard is identified and appropriately accommodated in the end use application. For example, a component used in a household application, but intended for industrial use and complying with the relevant component standard may assume user expertise not common in household applications.

6.1.2 A component that is also intended to perform other functions, such as over current protection, ground-fault circuit-interruption, surge suppression, any other similar functions, or any combination thereof, shall comply additionally with the requirements of the applicable UL standard(s) that cover devices that provide those functions.

Exception: Where these other functions are not required for the application and not identified as part of markings, instructions, or packaging for the appliance, the additional component standard(s) need not be applied.

6.1.3 A component not anticipated by the requirements of this standard, not specifically covered by the component standards of 6.2 – 6.22 or individual component sections and that involves a potential risk of electric shock, fire, or personal injury, shall be additionally investigated in accordance with the applicable UL standard, and shall comply with 6.1.1 (b) – (d).

6.1.4 With regard to a component being additionally investigated, reference to construction and performance requirements in another UL end product standard is appropriate where that standard anticipates normal and abnormal use conditions consistent with the application of this Standard.

6.2 Attachment plugs, receptacles, connectors, and terminals

6.2.1 Attachment plugs, receptacles, appliance couplers, appliance inlets (motor attachment plugs), and appliance (flatiron) plugs, shall comply with the Standard for Attachment Plugs and Receptacles, UL 498. See 6.2.8.

Exception: Attachment plugs and appliance couplers integral to cord sets or power supply cords are covered under the requirements of UL 817 and need not comply with UL 498.

6.2.2 Quick-connect terminals, both connectors and tabs, for use with one or two 22 – 10 AWG copper conductors, having nominal widths of 2.8, 3.2, 4.8, 5.2, and 6.3 mm (0.110, 0.125, 0.187, 0.205, and 0.250 in), intended for internal wiring connections in appliances, or for the field termination of conductors to the appliance, shall comply with the Standard for Electrical Quick-Connect Terminals, UL 310.

Exception: Other sizes of quick-connect terminals shall be investigated with respect to crimp pull out, insertion-withdrawal, temperature rise, and all tests shall be conducted in accordance with UL 310.

6.2.3 Single and multipole connectors for use in data, signal, control and power applications within and between electrical equipment, and that are intended for factory assembly to copper or copper alloy conductors, or for factory assembly to printed wiring boards, shall comply with the Standard for Component Connectors for Use in Data, Signal, Control and Power Applications, UL 1977. See 6.2.8.

Documents
Document Sharing Hub
Full document details: UL 283 2021

6.2.4 Wire connectors shall comply with the Standard for Wire Connectors, UL 486A-486B.

6.2.5 Splicing wire connectors shall comply with the Standard for Splicing Wire Connectors, UL 486C.

6.2.6 Wiring terminals for use with all alloys of copper, aluminum, or copper-clad aluminum conductors, shall comply with the Standard for Equipment Wiring Terminals for Use with Aluminum and/or Copper Conductors, UL 486E.

6.2.7 Terminal blocks shall comply with the Standard for Terminal Blocks, UL 1059.

6.2.8 Female devices (such as receptacles, appliance couplers, and connectors) that are intended, or that may be used, to interrupt current in the end product, shall be suitably rated for current interruption of the specific type of load, when evaluated with its mating plug or connector. For example, an appliance coupler that can be used to interrupt the current of a motor load shall have a suitable horsepower rating when tested with its mating plug.

6.3 Batteries and battery chargers

6.3.1 A lithium ion (Li-On) single cell battery shall comply with the requirements for secondary lithium cells in the Standard for Lithium Batteries, UL 1642. A lithium ion multiple cell battery, and a lithium ion battery pack, shall comply with the applicable requirements for secondary lithium cells or battery packs in the Standard for Household and Commercial Batteries, UL 2054.

6.3.2 Rechargeable nickel cadmium (Ni-Cad) cells and battery packs shall comply with the applicable construction and performance requirements of this end product standard.

6.3.3 Rechargeable nickel metal-hydride (Ni-MH) battery cells and packs shall comply with construction and performance requirements of this end product standard, or the applicable requirements for secondary cells or battery packs in the Standard for Household and Commercial Batteries, UL 2054.

6.3.4 Primary batteries (non-rechargeable) that comply with the relevant UL standard and 6.1 are considered to fulfill the requirements of this Standard.

6.3.5 A Class 2 battery charger shall comply with one of the following:

a) The Standard for Class 2 Power Units, UL 1310; or

b) The Standard for Information Technology Equipment – Safety – Part 1: General Requirements, UL 60950-1, with an output marked "Class 2", or that complies with the limited power source (LPS) requirements and is marked "LPS".

6.3.6 A non-Class 2 battery charger shall comply with one of the following:

a) The Standard for Power Units Other Than Class 2, UL 1012; or

b) The Standard for Information Technology Equipment – Safety – Part 1: General Requirements, UL 60950-1.

6.4 Capacitors and filters

6.4.1 The component requirements for a capacitor are not specified. A capacitor complying with the Standard for Capacitors, UL 810, is considered to fulfill the requirements of 16.1.

Documents
Document Sharing Hub
Full document details: UL 283 2021

6.4.2 Electromagnetic interference filters with integral enclosures that comply with the Standard for Electromagnetic Interference Filters, UL 1283, are considered to fulfill the requirements of 16.1.

6.5 Controls

6.5.1 General

6.5.1.1 Auxiliary controls shall be evaluated using the applicable requirements of this end product standard and the parameters in Section 24, Controls – End Product Test Parameters.

6.5.1.2 Operating (regulating) controls shall be evaluated using the applicable component standard requirements specified in 6.5.2 – 6.5.7, and if applicable, the parameters in Section 24, Controls – End Product Test Parameters, unless otherwise specified in this end product standard.

6.5.1.3 Operating controls that rely upon software for the normal operation of the end product where deviation or drift of the control may result in a hazard, such as a speed control unexpectedly changing its output, shall comply with:

a) The Standard for Tests for Safety-Related Controls Employing Solid-State Devices, UL 991; and the Standard for Software in Programmable Components, UL 1998; or

b) The Standard for Automatic Electrical Controls for Household and Similar Use; Part 1: General Requirements, UL 60730-1.

6.5.1.4 Protective (limiting) controls shall be evaluated using the applicable component standard requirements specified in 6.5.2 – 6.5.7, and if applicable, the parameters in Section 24, Controls – End Product Test Parameters, unless otherwise specified in this end product standard.

6.5.1.5 Solid-state protective controls that do not rely upon software as a protective component shall comply with:

a) The Standard for Tests for Safety-Related Controls Employing Solid-State Devices, UL 991; or

b) The Standard for Automatic Electrical Controls for Household and Similar Use, Part 1: General Requirements, UL 60730-1, except 11.2 h) (Controls using software).

6.5.1.6 Protective controls that rely upon software as a protective component shall comply with:

a) The Standard for Tests for Safety-Related Controls Employing Solid-State Devices, UL 991; and the Standard for Software in Programmable Components, UL 1998; or

b) The Standard for Automatic Electrical Controls for Household and Similar Use; Part 1: General Requirements, UL 60730-1.

6.5.1.7 An electronic, non-protective control that is simple in design need only be subjected to the applicable requirements of this end-product standard. A control that does not include an integrated circuit or microprocessor, but does consist of a discrete switching device, capacitors, transistors, and resistors, is considered simple in design. See Section 48, Abnormal Operation Test.

6.5.2 Electromechanical and electronic controls

6.5.2.1 A control, other than as specified in 6.5.3 – 6.5.7, shall comply with:

a) The Standard for Solid-State Controls for Appliances, UL 244A; or

Documents
Document Sharing Hub
Full document details: UL 283 2021

b) The Standard for Temperature-Indicating and -Regulating Equipment, UL 873; or

c) The Standard for Automatic Electrical Controls for Household and Similar Use; Part 1: General Requirements, UL 60730-1.

6.5.3 Liquid level controls

6.5.3.1 A liquid level control shall comply with:

a) The Standard for Solid-State Controls for Appliances, UL 244A; or

b) The Standard for Temperature-Indicating and -Regulating Equipment, UL 873; or

c) The Standard for Industrial Control Equipment, UL 508; or

d) The Standard for Automatic Electrical Controls for Household and Similar Use; Part 1: General Requirements, UL 60730-1; and

1) The Standard for Automatic Electrical Controls for Household and Similar Use; Part 2: Particular Requirements for Automatic Electrical Water Level Controls of the Float Type for Household and Similar Applications, UL 60730-2-16A; or

2) The Standard for Automatic Electrical Controls for Household and Similar Use; Part 2: Particular Requirements for Automatic Electrical Water and Air Flow Sensing Controls, Including Mechanical Requirements, UL 60730-2-18.

6.5.4 Motor and speed controls

6.5.4.1 A control used to start, stop, regulate or control the speed of a motor shall comply with:

a) The Standard for Solid-State Controls for Appliances, UL 244A; or

b) The Standard for Temperature-Indicating and -Regulating Equipment, UL 873; or

c) The Standard for Industrial Control Equipment, UL 508; or

d) The Standard for Adjustable Speed Electrical Power Drive Systems – Part 5-1: Safety Requirements – Electrical, Thermal and Energy, UL 61800-5-1; or

e) The Standard for Automatic Electrical Controls for Household and Similar Use; Part 1: General Requirements, UL 60730-1.

6.5.5 Pressure controls

6.5.5.1 A pressure control shall comply with one of the following:

a) The Standard for Temperature-Indicating and -Regulating Equipment, UL 873; or

b) The Standard for Industrial Control Equipment, UL 508; or

c) The Standard for Automatic Electrical Controls for Household and Similar Use; Part 1: General Requirements, UL 60730-1; and the Standard for Automatic Electrical Controls for Household and Similar Use; Part 2: Particular Requirements for Automatic Electrical Pressure Sensing Controls Including Mechanical Requirements, UL 60730-2-6.

Documents
Document Sharing Hub
Full document details: UL 283 2021

6.5.6 Temperature controls

6.5.6.1 A temperature control shall comply with:

a) The Standard for Solid-State Controls for Appliances, UL 244A; or

b) The Standard for Temperature-Indicating and -Regulating Equipment, UL 873; or

c) The Standard for Industrial Control Equipment, UL 508; or

d) The Standard for Automatic Electrical Controls for Household and Similar Use; Part 1: General Requirements, UL 60730-1; and the Standard for Automatic Electrical Controls for Household and Similar Use; Part 2: Particular Requirements for Temperature Sensing Controls, UL 60730-2-9.

6.5.7 Timer controls

6.5.7.1 A timer control shall comply with:

a) The Standard for Solid-State Controls for Appliances, UL 244A; or

b) The Standard for Automatic Electrical Controls for Household and Similar Use; Part 1: General Requirements, UL 60730-1; and the Standard for Automatic Electrical Controls for Household and Similar Use; Part 2: Particular Requirements for Timers and Time Switches, UL 60730-2-7.

6.6 Cords, cables, and internal wiring

6.6.1 A cord set or power supply cord shall comply with the Standard for Cord Sets and Power-Supply Cords, UL 817.

6.6.2 Flexible cords and cables shall comply with the Standard for Flexible Cords and Cables, UL 62. Flexible cord and cables are considered to fulfill this requirement when preassembled in a cord set or power supply cord complying with the Standard for Cord Sets and Power-Supply Cords, UL 817.

6.6.3 Internal wiring composed of insulated conductors shall comply with the Standard for Appliance Wiring Material, UL 758.

Exception No. 1: Insulated conductors need not comply with UL 758 if they comply with one of the following:

a) The Standard for Thermoset-Insulated Wires and Cables, UL 44;

b) The Standard for Thermoplastic-Insulated Wires and Cables, UL 83;

c) The Standard for Fixture Wire, UL 66; or

d) The appropriate UL standard (s) for other insulated conductor types specified in Chapter 3 (Wiring Methods and Materials) of NFPA 70.

Exception No. 2: Insulated conductors for specialty applications (e.g. data processing or communications) and located in a low-voltage circuit not involving the risk of fire or personal injury need not comply with UL 758.

6.7 Film-coated wire (magnet wire)

6.7.1 The component requirements for film coated wire and Class 105 (A) insulation systems are not specified.

AVA Documents
Document Sharing Hub

Full document details: UL 283 2021

6.7.2 Film coated wire in intimate combination with one or more insulators, and incorporated in an insulation system rated Class 120 (E) or higher, shall comply with the magnet wire requirements in the Standard for Systems of Insulating Materials – General, UL 1446.

6.8 Gaskets and seals

6.8.1 Gaskets and seals that comply with the Standard for Gaskets and Seals, UL 157, are considered to fulfill the requirements of 9.2 and 62.

6.9 Heaters and heating elements

6.9.1 Electric resistance heating elements shall comply with the construction requirements of:

a) The Standard for Electric Heating Appliances, UL 499; or

b) The Standard for Sheathed Heating Elements, UL 1030.

Exception: Heating wire (e.g. rope heater) that complies with the Standard for Appliance Wiring Material, UL 758, and the requirements of this end product standard are considered to fulfill this requirement.

6.9.2 Thermistor-type heaters (e. g. PTC and NTC heaters) shall comply with the Standard for Thermistor-Type Devices, UL 1434.

6.10 Insulation systems

6.10.1 Materials used in a Class 105 (A) insulation system shall comply with Section 33, Insulation Systems.

6.10.2 Materials used in an insulation system that operates above Class 105 (A) temperatures shall comply with the Standard for Systems of Insulating Materials – General, UL 1446.

6.10.3 All insulation systems employing integral ground insulation shall comply with the requirements specified in the Standard for Systems of Insulating Materials – General, UL 1446.

6.11 Light sources and associated components

6.11.1 Lampholders and indicating lamps shall comply with the Standard for Lampholders, UL 496.

Exception: Lampholders forming part of a luminaire that complies with an appropriate UL luminaire standard are considered to fulfill this requirement.

6.11.2 Lighting ballasts shall comply with:

a) The Standard for Fluorescent-Lamp Ballasts, UL 935; or

b) The Standard for High-Intensity-Discharge Lamp Ballasts, UL 1029.

Exception No. 1: Ballasts forming part of a luminaire that complies with an appropriate UL luminaire standard are considered to fulfill this requirement.

Exception No. 2: Ballasts for other light sources shall comply with the appropriate UL standard(s).

6.11.3 Light emitting diode (LED) light sources shall comply with the Standard for Light Emitting Diode (LED) Equipment For Use In Lighting Products, UL 8750.

AVA Documents
Document Sharing Hub

Full document details: UL 283 2021

Exception No. 1: LED light sources forming part of a luminaire that complies with an appropriate UL luminaire standard are considered to fulfill this requirement.

Exception No. 2: Individual LED light sources mounted on printed wiring boards and intended for indicating purposes need not comply with UL 8750, but shall comply with the applicable requirements of this end product standard.

6.12 Marking and labeling systems

6.12.1 A marking and labeling system shall comply with the Standard for Marking and Labeling Systems, UL 969 under the specified environmental conditions.

Exception: A marking or labeling system that complies with Section 50, Permanence of Marking Test, of this standard is considered to fulfill the requirement.

6.13 Motors and motor overload protection

6.13.1 General

6.13.1.1 General-purpose type motors having a NEMA frame size shall comply with the requirements specified in 6.13.2. This includes fractional HP motors rated up to 1 HP (typically NEMA frame sizes 42, 48, or 56), and integral HP motors rated 1 HP and greater (typically NEMA frame sizes 140 – 449T).

6.13.1.2 Motors not enclosed, or partially enclosed, by the end product enclosure shall comply with the requirements specified in 6.13.2.

6.13.1.3 Component type motors completely enclosed within the end product enclosure shall comply with the requirements specified in 6.13.2 or 6.13.3.

6.13.1.4 Motors located in a low voltage circuit are evaluated for the risk of fire and personal injury in accordance with the applicable requirements of this end product standard.

6.13.1.5 Low voltage component fans that comply with the Standard for Electric Fans, UL 507, are considered to fulfill the requirements of Section 20, Motors.

6.13.2 General-purpose type motors

6.13.2.1 A general-purpose type motor shall comply with the Standard for Rotating Electrical Machines – General Requirements, UL 1004-1.

6.13.3 Component type motors

6.13.3.1 Component type motors shall comply with either 6.13.3.2 or 6.13.3.3.

6.13.3.2 The motor shall comply with the Standard for Rotating Electrical Machines – General Requirements, UL 1004-1 except as noted in Table 6.1.

Documents
Document Sharing Hub
Full document details: UL 283 2021

Table 6.1
Superseded requirements

UL 1004-1 Exempted Requirement	Superseded by UL 283 Requirements
Current and Horsepower Relation, Section 6	20.3.4
Cord-Connected Motors, Section 15	11.1
Factory Wiring Terminals and Leads, Section 17	Section 14
Electrical Insulation, Section 22	Section 13
Non-Metallic Functional Parts, Section 28	Sections 7, 13, 20
Solid-State Controls, 7.2	Section 6.5
Non-metallic enclosure thermal aging, 9.1.4	7.2.8
Motor enclosure, 9.2 – 9.4	Section 7
Grounding, Sections 10 and 11	Section 17
Ventilation Openings, Section 12: only applicable where the openings are on surfaces considered to be the appliance enclosure	7.2.8
Accessibility of Uninsulated Live Parts, Film-Coated Wire, and Moving Parts, Section 13	Section 10
Protection Against Corrosion, Section 14	Section 9
Available fault current ratings for motor start and running capacitors, Clause 26.6: not applicable for cord and plug connected appliances.	Section 16
Switch, Section 27 is not applicable to centrifugal starting switches	Section 23
With the exception of Sections 35 and 40 (Resilient Elastomer Mounting and Electrolytic Capacitor Tests, respectively), the performance tests of UL 1004-1 are not applicable	All applicable performance tests.
Only the following marking requirements specified in 43.1 of UL 1004-1 are applicable: manufacturer's name or identification; rated voltage; rated frequency; number of phases if greater than 1; and multi-speed motors, other than a shaded-pole or a permanent-split-capacitor motor, shall be marked with the amperes and horsepower at each speed	72.1

6.13.3.3 The motor shall comply with the applicable component requirements in Section 6, the following construction requirements, and the applicable performance requirements (when tested in conjunction with the end product), of this end product standard:

a) Protection against corrosion, Section 9;

b) Insulating Material, Section 13;

c) Internal wiring, Section 14;

d) Capacitors, Section 16;

e) Grounding, Section 17;

f) Motors, Section 20;

g) Spacings, Section 25.

6.13.4 Motor overload protection

6.13.4.1 Thermal protection devices integral with the motor shall comply with:

Documents
Document Sharing Hub
Full document details: UL 283 2021

a) The Standard for Thermally Protected Motors, UL 1004-3; or

b) The Standard for Automatic Electrical Controls for Household and Similar Use, Part 1: General Requirements, UL 60730-1; and the Standard for Automatic Electrical Controls for Household and Similar Use; Part 2 Particular Requirements for Thermal Motor Protectors, UL 60730-2-2; in conjunction with the Standard for Thermally Protected Motors, UL 1004-3 (to evaluate the motor-protector combination).

6.13.4.2 Impedance protection shall comply with the Standard for Impedance Protected Motors, UL 1004-2.

6.13.4.3 Electronic protection integral to the motor shall comply with the Standard for Electronically Protected Motors, UL 1004-7.

6.13.4.4 Except as indicated in 6.13.4.3, electronically protected motor circuits shall comply with one of the following. See 6.5.4 for basic control requirements.

a) The Standard for Tests for Safety-Related Controls Employing Solid-State Devices, UL 991. When the protective electronic circuit is relying upon software as a protective component, it shall comply with the requirements in the Standard for Software in Programmable Components, UL 1998. If software is relied upon to perform a safety function, it shall be considered software Class 1; or

b) The Standard for Automatic Electrical Controls for Household and Similar Use, Part 1: General Requirements, UL 60730-1. If software is relied upon to perform a safety function, it shall be considered software Class B; or

c) The Standard for Adjustable Speed Electrical Power Drive Systems – Part 5-1: Safety Requirements – Electrical, Thermal and Energy, UL 61800-5-1.

Exception: Compliance with the above standards is not required for an electronically protected motor circuit if there is no risk of fire, electric shock, or casualty hazard during abnormal testing with the motor electronic circuit rendered ineffective; compliance with the applicable requirements of this end product standard is then required.

6.14 Overcurrent protection

6.14.1 Fuses shall comply with the Standard for Low-Voltage Fuses – Part 1: General Requirements, UL 248-1; and the applicable UL 248 Part 2 (e.g. UL 248-5). Defined use fuses that comply with UL 248-1 and another appropriate UL standard for the fuse are considered to fulfill this requirement.

6.14.2 Fuseholders shall comply with the Standard for Fuseholders – Part 1: General Requirements, UL 4248-1, and the applicable Part 2 (e.g. UL 4248-9).

6.14.3 Circuit breakers shall comply with the Standard for Molded-Case Circuit Breakers, Molded-Case Switches and Circuit-Breaker Enclosures, UL 489.

Exception: Circuit breakers used in telecommunications circuitry that comply with the Standard for Circuit Breakers For Use in Communications Equipment, UL 489A, need not comply with UL 489.

6.14.4 Circuit breakers having integral ground fault circuit interrupter capability for protection against electrical shock shall additionally comply with the Standard for Ground-Fault Circuit-Interrupters, UL 943.

6.14.5 Supplementary protectors shall comply with the Standard for Supplementary Protectors for Use in Electrical Equipment, UL 1077.

AVA Documents
Document Sharing Hub
Full document details: UL 283 2021

6.14.6 Fusing resistors shall comply with the Standard for Fusing Resistors and Temperature-Limited Resistors for Radio- and Television-Type Appliances, UL 1412.

6.15 Polymeric materials and enclosures

6.15.1 Unless otherwise specified in this end product standard, polymeric electrical insulating materials and enclosures shall comply with the applicable requirements of the Standard for Polymeric Materials – Use in Electrical Equipment Evaluations, UL 746C.

6.15.2 Metallized or painted polymeric parts or enclosures shall comply with the applicable requirements of the Standard for Polymeric Materials – Use in Electrical Equipment Evaluations, UL 746C. This requirement is not applicable to exterior surfaces of polymeric enclosure materials or parts provided that the metallized coating or paint does not offer a continuous path for an internal flame to propagate externally.

6.16 Power supplies

6.16.1 A Class 2 power supply shall comply with one of the following:

a) The Standard for Class 2 Power Units, UL 1310; or

b) The Standard for Information Technology Equipment – Safety – Part 1: General Requirements, UL 60950-1, with an output marked "Class 2", or that complies with the limited power source (LPS) requirements and is marked "LPS".

6.16.2 A non-Class 2 power supply shall comply with one of the following:

a) The Standard for Power Units Other Than Class 2, UL 1012; or

b) The Standard for Information Technology Equipment – Safety – Part 1: General Requirements, UL 60950-1.

6.17 Printed-wiring boards

6.17.1 Printed-wiring boards, including the coatings, shall comply with the Standard for Printed-Wiring Boards, UL 796.

Exception: A printed-wiring board in a Class 2 nonsafety circuit is not required to comply with the bonding requirements in UL 796 if the board is separated from parts of other circuits such that loosening of the bond between the foil conductor and the base material will not result in the foil conductors or components coming in contact with parts of other circuits of the control or of the end-use product.

6.18 Semiconductors and small electronic components

6.18.1 A power switching semiconductor device that is relied upon to provide isolation to ground shall comply with the Standard for Electrically Isolated Semiconductor Devices, UL 1557. The dielectric voltage withstand tests required by UL 1557 shall be conducted applying the criteria of Section 41 of this end product standard.

6.18.2 An optical isolator that is relied upon to provide isolation between primary and secondary circuits or between other circuits as required by this end product standard shall comply with the Standard for Optical Isolators, UL 1577. The dielectric voltage withstand tests required by UL 1577 shall be conducted applying the criteria of Section 41 of this end product standard.

Documents
Document Sharing Hub
Full document details: UL 283 2021

6.18.3 Except as specified in 6.18.4, component requirements are not specified for small electronic components on printed wiring boards, including diodes, transistors, resistors, inductors, integrated circuits, and capacitors not directly connected to the supply source.

6.18.4 Where an electronic component is determined to be a critical component during the testing of Section 48, Abnormal Operation Test, one of the following standards shall be applied. See 24.4 of this end product standard for the test parameters to be used.

a) The Standard for Tests for Safety-Related Controls Employing Solid-State Devices, UL 991, including its Follow-Up Program; and as applicable, the Standard for Software in Programmable Components, UL 1998 for controls that rely upon software as a protective component; or

b) The Standard for Automatic Electrical Controls for Household and Similar Use; Part 1: General Requirements, UL 60730-1.

6.18.5 A critical component is a component that performs one or more safety-related functions whose failure results in a condition, such as the risk of fire, electric shock, or injury to persons, in the end product application.

6.18.6 A critical component may also be identified using a failure-mode and effect analysis (FMEA) in accordance with the Failure-Mode and Effect Analysis (FMEA) section of UL 991.

6.18.7 Portions of a circuit comprised of a microcontroller or other programmable device that performs a back-up, limiting, or other safety function intended to reduce the risk of fire, electric shock, or injury to persons shall comply with the Standard for Automatic Electrical Controls for Household and Similar Use; Part 1: General Requirements, UL 60730-1, Annex H.

6.19 Supplemental insulation, insulating bushings, and assembly aids

6.19.1 The requirements for supplemental insulation (e.g. tape, sleeving or tubing) are not specified unless the insulation or device is required to fulfill 14.2.5 or a performance requirement of this standard. In such cases:

a) Insulating tape shall comply with the Standard for Polyvinyl Chloride, Polyethylene, and Rubber Insulating Tape, UL 510.

b) Sleeving shall comply with the Standard for Coated Electrical Sleeving, UL 1441.

c) Tubing shall comply with the Standard for Extruded Insulating Tubing, UL 224.

6.19.2 Wire positioning devices shall comply with Sections 13 and 15. A device that complies with the Standard for Positioning Devices, UL 1565, is considered to fulfill this requirement.

6.19.3 Insulating bushings that comply with Section 6.1 of this end product standard, and the Standard for Insulating Bushings, UL 635, are considered to fulfill the requirements of this Standard. Tests specified in this Standard (e.g. Strain Relief Test) may still need to be performed to confirm the combination of the insulating bushing and the supporting part are suitable.

6.20 Switches

6.20.1 Switches shall comply with one of the following, as applicable:

a) The Standard for Special-Use Switches, UL 1054;

b) The Standard for Switches for Appliances – Part 1: General Requirements, UL 61058-1

AVA Documents
Document Sharing Hub
Full document details: UL 283 2021

c) The Standard for General-Use Snap Switches, UL 20; or

d) The Standard for Nonindustrial Photoelectric Switches for Lighting Control, UL 773A.

Exception: Switching devices that comply with the appropriate UL standard for specialty applications (e.g. transfer switch equipment), industrial use (e. g. contactors, relays, auxiliary devices), or are integral to another component (e.g. switched lampholder) need not comply.

6.20.2 A clock-operated switch, in which the switching contacts are actuated by a clock-work, by a gear-train, by electrically-wound spring motors, by electric clock-type motors, or by equivalent arrangements shall comply with one of the following:

a) The Standard for Clock-Operated Switches, UL 917; or

b) The Standard for Automatic Electrical Controls for Household and Similar Use; Part 1: General Requirements, UL 60730-1; and the Standard for Automatic Electrical Controls for Household and Similar Use; Part 2: Particular Requirements for Timers and Time Switches, UL 60730-2-7.

6.20.3 A timer or time switch, incorporating electronic timing circuits or switching circuits, with or without separable contacts, shall comply with the requirements for an operating control with Type 1 action for 6000 cycles of operation, or as a manual control for 5000 cycles of operation, in accordance with the following:

a) The Standard for Solid-State Controls for Appliances, UL 244A; or

b) The Standard for Automatic Electrical Controls for Household and Similar Use; Part 1: General Requirements, UL 60730-1; and the Standard for Automatic Electrical Controls for Household and Similar Use; Part 2: Particular Requirements for Timers and Time Switches, UL 60730-2-7.

6.20.4 A timer or time switch, incorporating electronic timing circuits or switching circuits, with or without separable contacts, that functions as a protective control, shall comply with the requirements for a protective control; see 6.5.1.4.

6.21 Transformers

6.21.1 A transformer shall comply with the construction and performance requirements in the following Standards:

a) The Standard for Low Voltage Transformers – Part 1: General Requirements, UL 5085-1 and the Standard for Low Voltage Transformers – Part 2: General Purpose Transformers, UL 5085-2;

b) The Standard for Transformers and Motor Transformers for Use in Audio-, Radio-, and Television-Type Appliances, UL 1411; or

c) The Standard for Low Voltage Transformers – Part 1: General Requirements, UL 5085-1 and the Standard for Low Voltage Transformers – Part 3: Class 2 and Class 3 Transformers, UL 5085-3.

6.22 Valves (electrically operated) and solenoids

6.22.1 Electrically operated valves shall comply with:

a) The Standard for Electrically Operated Valves, UL 429; or

b) The Standard for Automatic Electrical Controls for Household and Similar Use; Part 1: General Requirements, UL 60730-1; and the Standard for Automatic Electrical Controls for Household and Similar Use; Part 2: Particular Requirements for Electrically Operated Water Valves, Including Mechanical Requirements, UL 60730-2-8.

AVA Documents
Document Sharing Hub
Full document details: UL 283 2021

6.22.2 Solenoids shall comply with the applicable construction and performance requirements of this end-product standard.

7 Frame and Enclosure

7.1 General

7.1.1 An appliance shall be formed and assembled so that it will have the strength and rigidity required to resist the abuses to which it is able to be subjected, without increasing the risk of fire, electric shock or injury to persons due to total or partial collapse with resulting reduction of spacings, loosening or displacement of parts, or other serious defects.

7.1.2 For unreinforced, flat surfaces in general, cast metal shall not be less than 1/8 in (3.2 mm) thick, except that malleable iron not less than 2.4 mm (3/32 in) and die cast metal not less than 2.0 mm (5/64 in) thick each meet the intent of the requirement. Corresponding thicknesses of not less than 2.4 mm (3/32 in), 1.6 mm (1/16 in), and 1.2 mm (3/64 in), respectively, are able to be used when the surface under consideration is curved, ribbed, or otherwise reinforced, or when the shape or size, or both, of the surface is such that the required mechanical strength is provided.

7.1.3 An enclosure of sheet metal shall be judged with respect to its size, shape, thickness of metal, and its application, considering the intended use of the complete appliance. Sheet steel having a thickness of less than 0.66 mm (0.026 in) if uncoated or 0.74 mm (0.029 in) if galvanized or of nonferrous sheet metal having a thickness of less than 0.91 mm (0.036 in) shall not be used, except for relatively small areas or for surfaces that are curved or otherwise reinforced.

7.1.4 A non-metallic enclosure shall comply with the applicable mechanical and electrical property considerations, flammability, and thermal requirements as specified in the Standard for Polymeric Materials – Use in Electrical Equipment Evaluations, UL 746C. A force as detailed in Table 61.1 shall apply to the appliance when determining the impact resistance of polymeric enclosures.

Exception No. 1: A polymeric grille used in a fan is not required to comply with the flammability requirements of UL 746C when:

a) The material has a minimum flame class rating of HB;

b) It is used as an enclosure of insulated current-carrying parts and the insulation thickness is 0.71 mm (0.028 in) or greater; and

c) The grille is completely external when installed as intended.

Exception No. 2: A polymeric grille used in a fan intended to be mounted at least 2.1 m (7 ft) above the floor is not required to comply with the Resistance to Impact Test of UL 746C.

7.1.5 Among the factors that shall be taken into consideration when judging a nonmetallic enclosure or an enclosure of magnesium are resistance to:

a) Mechanical damage;

b) Impact;

c) Moisture-absorption;

d) Combustion;

e) Distortion at temperatures to which the material is able to be subjected under conditions of normal or abnormal use; and

AVA Documents
Document Sharing Hub
Full document details: UL 283 2021

f) Resistance to arcing.

7.1.6 The enclosure of a remotely or automatically controlled appliance shall reduce the risk of molten metal, burning insulation, flaming particles, or other ignited material from falling on combustible materials, including the surface upon which the appliance is supported.

7.1.7 The requirements in 7.1.6 necessitate the use of a barrier or material having a zero flame spread rating when tested as described in the Standard for Tests for Surface Burning Characteristics of Building Materials, UL 723:

a) Under a motor unless:

1) The structural parts of the motor or of the appliance provide the equivalent of such a barrier;

2) The protection provided with the motor is such that no burning insulation or molten material falls to the surface that supports the appliance when the motor is energized under each of the following fault conditions:

i) Open main winding;

ii) Open starting winding;

iii) Starting switch short-circuited; and

iv) Capacitor of permanent-split capacitor motor short-circuited (the short circuit is to be applied before the motor is energized, and the rotor is to be locked);

3) The motor is provided with a thermal motor protector (a protective device that is sensitive to temperature and current) that reduces the risk of the temperature of the motor windings from exceeding 125°C (257°F) under the maximum load under which the motor runs without causing the protector to cycle and from exceeding 150°C (302°F) with the rotor of the motor locked; or

Exception: A direct drive fan motor is required to only be subjected to the locked rotor test.

4) The motor complies with the requirements in the Standard for Rotating Electrical Machines – General Requirements, UL 1004-1, and the temperature of the motor winding does not exceed 150°C during the first 72 hours of operation with the rotor of the motor locked.

b) Under the wire, unless the wire:

1) Is thermoplastic insulated, such as wire marked VW-1; or

2) Has at least equivalent characteristics as determined in the flame tests specified in the Standard for Thermoplastic-Insulated Wires and Cables, UL 83.

c) Under a switch, relay, solenoid, or similar component unless:

1) A short circuit or overload in the component does not result in a risk of fire; or

2) There are no openings in the enclosure through which molten metal, burning insulation, flaming particles, or other ignited material can fall.

Exception: A terminal is not required to have a barrier.

Documents
Document Sharing Hub

Full document details: UL 283 2021

7.1.8 The barrier mentioned in 7.1.7 shall be horizontal, shall be located as illustrated in Figure 7.1, and shall not have an area less than that described in the figure. The use of openings for drainage, ventilation, and similar purposes in the barrier meets the intent of the requirement, when molten metal, burning insulation, or other ignited material are not able to come into contact with combustible material through these openings.

Documents
Document Sharing Hub
Full document details: UL 283 2021

Figure 7.1

Location and extent of barrier

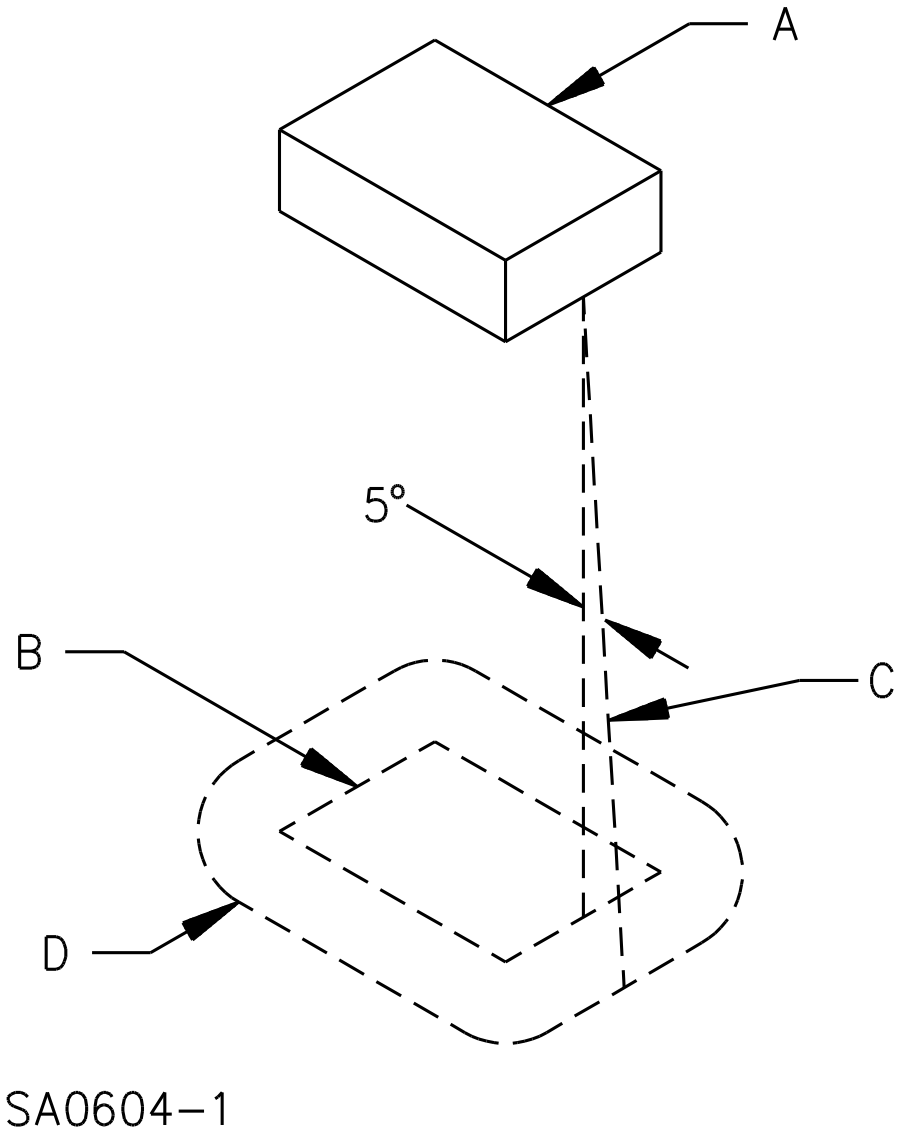

NOTES –

A – Region to be shielded by barrier. This consists of the entire component if it is not otherwise shielded and includes the unshielded portion of a component that is partially shielded by the component enclosure or equivalent.

B – Projection of outline of component on horizontal plane.

C – Inclined line that traces out minimum area of barrier. The line is always:

1) tangent to the component;

2) 5 degrees from the vertical; and

3) oriented so that the area traced out on a horizontal plane is maximum.

D – Location (horizontal) and minimum area for barrier. The area is that included inside the line of intersection traced out by the inclined line C and the horizontal plane of the barrier.

Documents
Document Sharing Hub
Full document details: UL 283 2021

7.1.9 The enclosure of an air freshener or deodorizer shall be such as to reduce the risk of liquid from contacting uninsulated current-carrying parts when the appliance is tested as described in the Flooding of Current-Carrying Parts Test, Section 42, as applicable.

7.1.10 A door or a cover of an enclosure that provides access to any overload protective device that requires resetting or renewal shall be hinged or otherwise attached in an equivalent manner. If the opening of such a door or cover exposes the user to accessible current-carrying parts, other than the screw shell or clips of a fuseholder, the door or cover shall not be capable of being opened without the use of a tool.

7.1.11 Means shall be provided for holding the door or cover over a fuseholder in a closed position. The door or cover shall be tight-fitting, and shall not be capable of being opened without the use of a tool if the opening of such a door or cover exposes the user to accessible current-carrying parts other than the screw shell or clips.

7.1.12 A cord-connected appliance that is provided with keyhole slots, notches, hanger holes, or similar means, for hanging on a wall shall be constructed in such a manner that the hanging means is not accessible without removing the appliance from the supporting means.

7.1.13 To determine whether an appliance complies with the requirement in 7.1.12, any part of the enclosure or barrier that is able to be removed without the use of tools to gain access to the hanging means is to be removed.

7.1.14 An opening in the appliance provided for hanging shall be located or guarded so that a nail, hook, or similar fasteners do not displace a part that creates a risk of fire or electric shock, and does not contact one of the following:

a) An uninsulated current-carrying part.

b) Magnet wire.

c) Internal wiring.

d) Moving parts.

e) Any other part able to create a risk of fire or electric shock.

7.1.15 An enclosure, frame, guard, handle, or other part of the appliance that is exposed to contact during intended operation shall not be sharp enough to constitute a risk of injury to persons, as determined by the Standard for Tests for Sharpness of Edges on Equipment, UL 1439.

7.1.16 An accessible liquid coating material (such as paint, enamel, lacquer, ink, and the like) applied to a direct plug-in Deodorizer or Air Fresheners with child appealing features shall not contain compounds of lead, antimony, arsenic, barium, cadmium, chromium, mercury, or selenium exceeding amounts specified in the Standard Consumer Safety Specification for Toy Safety, ASTM F963. A liquid coating material is considered to be accessible if it can be contacted by persons before or after compliance with the performance requirements described the Impact test Section 61 and Mold Stress-Relief Distoration Test Section 59.

Exception: The requirements for a liquid coating material do not apply to ink applied to a packing material.

7.2 Non-metallic parts other than enclosures

7.2.1 The material of a reservoir, the breakage of which is capable of resulting in risk of fire or electric shock, shall have such properties as to meet the conditions anticipated in use.

Documents
Document Sharing Hub

Full document details: UL 283 2021

7.2.2 A reservoir, when installed in the appliance as directed by the manufacturer's instructions, shall withstand the applicable requirements in the Impact Test, Section 61, without cracking, breaking, or sustaining other damage that causes leaking of the liquid it is intended to contain.

Exception: Current-carrying parts are not required to be so located or protected from unintended exposure to the liquid contained in the reservoir if the reservoir:

a) Is resistant to deterioration from the liquid intended for use in it, as determined by the Resistance to Deterioration Test, Section 62; and

b) Complies with the requirement in the Impact Test, Section 61.

7.2.3 Polymeric material used to enclose a metal housing that encloses insulated or uninsulated current-carrying parts, or used as a decorative part, shall be classed either 5VA, 5VB, V-0, V-1, V-2, or HB by the burning tests described in the Standard for Tests for Flammability of Plastic Materials for Parts in Devices and Appliances, UL 94.

Exception No. 1: Decorative parts are not required to be made of a material classed 5VA, 5VB, V-0, V-1, V-2, or HB when the part does not occupy a volume greater than 2 cm^3 (0.122 in^3), does not have any dimension greater than 3 cm (1.18 in), and is located so it does not propagate flame from one area to another or bridge between a possible source of ignition and other ignitable parts.

Exception No. 2: A material is determined to be equivalent when it complies with the 12-mm (0.47-in) flame test, the 19-mm (0.75-in) flame test, or 127-mm (5-in) flame test of the Standard for Polymeric Materials – Use in Electrical Equipment Evaluations, UL 746C, when flame tested as used in the equipment. A flame-retardant coating applied to the inside of a polymeric enclosure shall not be used unless the coating/material interface is determined to be equivalent by separate investigation.

7.2.4 An impeller of polymeric material outside a motor shall not be located within 25.4 mm (1 in) of an opening in the motor housing.

Exception: An impeller is not prohibited from being within 25.4 mm of an opening in the motor housing when:

a) The material is classed as V-2, V-1, V-0, 5VA, or 5VB in accordance with the Standard for Tests for Flammability of Plastic Materials for Parts in Devices and Appliances, UL 94; or

b) The material complies with the requirements for enclosure flammability using a 19-mm (3/4-in) flame, in accordance with the Standard for Polymeric Materials – Use in Electrical Equipment Evaluations, UL 746C; or

c) No motor opening within 25.4 mm of the blade has a dimension more than 6.75 mm (17/64 in) or an area more than 35.48 mm^2 (0.055 in^2), and no more than six such openings are provided; or

d) In a skeleton or open frame type motor:

1) The impeller is of material classed HB or less flammable in accordance with the Standard for Tests for Flammability of Plastic Materials for Parts in Devices and Appliances, UL 94;

2) The coil is completely wrapped with insulation at least 0.8 mm (1/32 in) thick; and

3) The space between the coil wrap and bobbin does not exceed 0.8 mm; or

e) The material has a hot wire ignition rating of at least 7 seconds as described in the Standard Test Method for Ignition of Materials by Hot Wire Sources, ASTM D3874; or

Documents
Document Sharing Hub
Full document details: UL 283 2021

f) The appliance employs a thermally protected motor to drive the impeller and complies with the Impeller Ignition Test, Section 54.

7.2.5 Foamed thermoplastic shall be classed HF-2 or HF-1.

7.2.6 A thermoplastic part that is not decorative and that does not serve as an enclosure shall be classed HB, 5VA, 5VB, V-2, V-1, or V-0.

Exception No. 1: The requirement of 7.2.6 does not apply to wicks.

Exception No. 2: A flammability class is not required for a reservoir if the test specimens neither flame nor glow when subject to the Glow Wire Test of the Standard for Polymeric Materials – Short Term Property Evaluations, UL 746A, at a temperature of 550°C. Flaming or glowing of the test specimen is acceptable if it extinguishes within 30 seconds after removal of the glow wire and there is no ignition of the tissue paper beneath the test specimen.

7.2.7 Thermoplastic gel pack materials shall comply with one of the following:

a) Classed minimum HB; or

b) Shall not flame nor glow when subjected to the Glow Wire Test of the Standard for Polymeric Materials – Short Term Property Evaluations, UL 746A, at a temperature of 550° C. Flaming or glowing of the test specimen is acceptable if it extinguishes within 30 seconds after removal of the glow wire and there is no ignition of the tissue paper beneath the test specimen.

Exception: This requirement does not apply to the membrane of the gel pack.

7.2.8 The polymeric housing of a component is not considered to be an appliance enclosure unless this part is the sole insulation (excluding air) between a live part and an external surface of the appliance.

8 Mechanical Assembly

8.1 An appliance shall be assembled so that the vibration of normal operation does not adversely affect it. Brush caps shall be tightly threaded or otherwise constructed to reduce the risk of loosening.

8.2 A switch other than a through-cord switch, a lampholder, an attachment-plug receptacle, a motor-attachment plug, or similar component shall be securely mounted and shall be kept from turning. See 8.4.

Exception No. 1: A switch is not required to be kept from turning when:

a) The switch:

1) Is of a plunger or other type that does not tend to rotate when operated. A toggle switch is considered to be subject to forces that tend to turn the switch during normal operation of the switch; and

2) The means for mounting the switch greatly reduces the probability that operation of the switch will loosen it.

OR

b) The switch:

1) Rotates and spacings are not reduced below the minimum required values; and

Documents
Document Sharing Hub
Full document details: UL 283 2021

2) The normal operation of the switch is by mechanical means rather than by direct contact by persons.

Exception No. 2: A lampholder of the type in which the lamp is unable to be replaced, such as a neon pilot or indicator light in which the lamp is sealed in a nonremovable jewel, is not required to keep from turning when rotation is unable to reduce spacings below the minimum required values.

8.3 Uninsulated current-carrying parts shall be secured to the base or mounting surface so that they are restricted from turning or shifting in position, if such motion results in a reduction of spacings below the minimum required values.

8.4 The means for keeping the switch and current-carrying parts mentioned in 8.2 and 8.3 from turning or shifting is to consist of more than friction between surfaces. For example, a properly applied lock washer employed to keep a small stem-mounted switch (or other device having a single-hole mounting means) from turning meets the intent of the requirement.

9 Protection Against Corrosion

9.1 Iron and steel parts shall be protected against corrosion by enameling, galvanizing, plating, or other equivalent means, if corrosion of such unprotected parts results in a risk of fire, electric shock, or injury to persons.

Exception No. 1: Surfaces of sheet-steel and cast-iron parts within an enclosure are not required to be protected against corrosion if the oxidation of the metal due to the exposure to air and moisture is not appreciable. The thickness of metal and temperature are also to be taken into account as part of such a decision.

Exception No. 2: This requirement does not apply to bearings, laminations, or minor parts of iron or steel, such as washers, screws, and similar fasteners.

9.2 If deterioration of a liquid container provided as a part of an appliance results in a risk of fire or electric shock, the container shall be of a material that is resistant to corrosion by the liquid intended to be used therein.

10 Accessibility of Uninsulated Current-Carrying Parts, Film-Coated Wire, and Moving Parts

10.1 To reduce the risk of electric shock from unintentional contact with an uninsulated current-carrying part or film-coated wire, or injury to persons from a moving part, an opening in an enclosure shall comply with either (a) or (b).

a) For an opening that has a minor dimension (see 10.5) less than 25.4 mm (1 in), such a part or wire shall not be contacted by the probe illustrated in Figure 10.1.

b) For an opening that has a minor dimension of 25.4 mm (1 in) or more, such a part or wire shall be spaced from the opening as specified in Table 10.1.

Exception: A motor, other than one used in either a hand-held appliance or a hand-supported portion of an appliance, is not required to comply with these requirements if it complies with the requirements in 10.2.

Documents
Document Sharing Hub

Full document details: UL 283 2021

Figure 10.1

Articulate probe with web stop

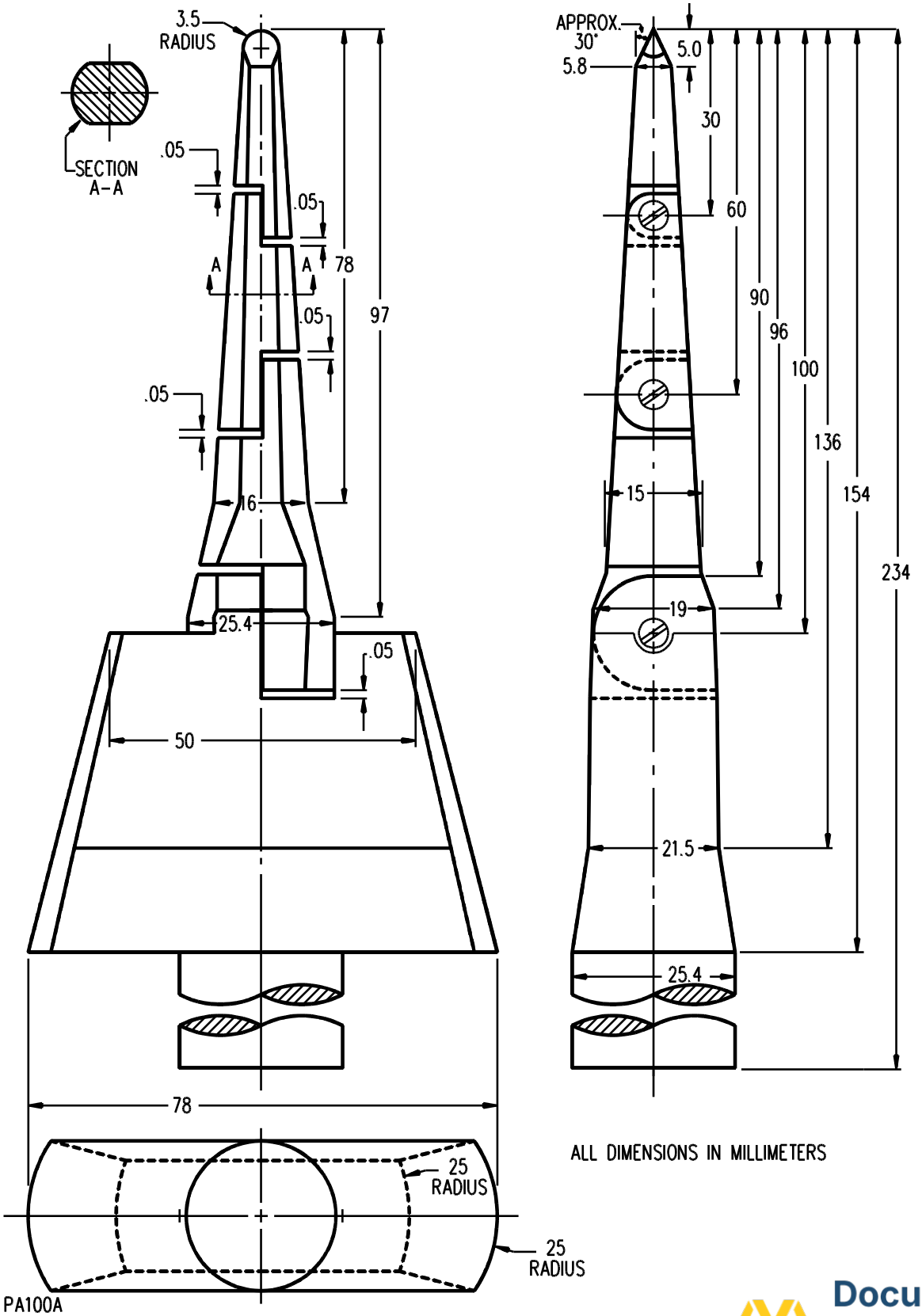

Documents
Document Sharing Hub
Full document details: UL 283 2021