UL 427

STANDARD FOR SAFETY

Refrigerating Units

Documents
Document Sharing Hub

Copyright UL
Provided by IHS under license with UL
No reproduction or networking permitted without license from IHS
Full document details: UL 427 2013

Licensee=North Carolina State Univ/5618801100
Not for Resale, 07/06/2013 19:12:45 MDT

UL COPYRIGHTED MATERIAL –
NOT AUTHORIZED FOR FURTHER REPRODUCTION OR
DISTRIBUTION WITHOUT PERMISSION FROM UL

Documents
Document Sharing Hub

Copyright UL
Provided by IHS under license with UL
No reproduction or networking permitted without license from IHS
Full document details: UL 427 2013

Licensee=North Carolina State Univ/5618801100
Not for Resale, 07/06/2013 19:12:45 MDT

UL Standard for Safety for Refrigerating Units, UL 427

Fifth Edition, Dated November 11, 2011

Summary of Topics

This revision of ANSI/UL 427 consists of the following:

1. Addition of requirements for refrigerating units employing a flammable refrigerant in the refrigerating system, Supplement SA.

Text that has been changed in any manner or impacted by UL's electronic publishing system is marked with a vertical line in the margin. Changes in requirements are marked with a vertical line in the margin and are followed by an effective date note indicating the date of publication or the date on which the changed requirement becomes effective.

The new/revised requirements are substantially in accordance with Proposal(s) on this subject dated November 16, 2012.

All rights reserved. No part of this publication may be reproduced, stored in a retrieval system, or transmitted in any form by any means, electronic, mechanical photocopying, recording, or otherwise without prior permission of UL.

UL provides this Standard ″as is″ without warranty of any kind, either expressed or implied, including but not limited to, the implied warranties of merchantability or fitness for any purpose.

In no event will UL be liable for any special, incidental, consequential, indirect or similar damages, including loss of profits, lost savings, loss of data, or any other damages arising out of the use of or the inability to use this Standard, even if UL or an authorized UL representative has been advised of the possibility of such damage. In no event shall UL's liability for any damage ever exceed the price paid for this Standard, regardless of the form of the claim.

Users of the electronic versions of UL's Standards for Safety agree to defend, indemnify, and hold UL harmless from and against any loss, expense, liability, damage, claim, or judgment (including reasonable attorney's fees) resulting from any error or deviation introduced while purchaser is storing an electronic Standard on the purchaser's computer system.

The requirements in this Standard are now in effect, except for those paragraphs, sections, tables, figures, and/or other elements of the Standard having future effective dates as indicated in the note following the affected item. The prior text for requirements that have been revised and that have a future effective date are located after the Standard, and are preceded by a ″SUPERSEDED REQUIREMENTS″ notice.

UL COPYRIGHTED MATERIAL –
NOT AUTHORIZED FOR FURTHER REPRODUCTION OR
DISTRIBUTION WITHOUT PERMISSION FROM UL

Documents
Document Sharing Hub

Copyright UL
Provided by IHS under license with UL
No reproduction or networking permitted without license from IHS
Full document details: UL 427 2013

Licensee=North Carolina State Univ/5618801100
Not for Resale, 07/06/2013 19:12:45 MDT

No Text on This Page

UL COPYRIGHTED MATERIAL –
NOT AUTHORIZED FOR FURTHER REPRODUCTION OR
DISTRIBUTION WITHOUT PERMISSION FROM UL

Documents
Document Sharing Hub

Copyright UL
Provided by IHS under license with UL
No reproduction or networking permitted without license from IHS
Full document details: UL 427 2013

Licensee=North Carolina State Univ/5618801100
Not for Resale, 07/06/2013 19:12:45 MDT

NOVEMBER 11, 2011
(Title Page Reprinted: February 1, 2013)

ANSI/UL 427-2013

UL 427

Standard for Refrigerating Units

First Edition – March, 1976
Second Edition – December, 1989
Third Edition – December, 1994
Fourth Edition – December, 2006

Fifth Edition

November 11, 2011

This ANSI/UL Standard for Safety consists of the Fifth Edition including revisions through February 1, 2013.

The most recent designation of ANSI/UL 427 as an American National Standard (ANSI) occurred on February 1, 2013. ANSI approval for a standard does not include the Cover Page, Transmittal Pages, Title Page, or effective date information.

The Department of Defense (DoD) has adopted UL 427 on April 9, 1992. The publication of revised pages or a new edition of this Standard will not invalidate the DoD adoption.

Comments or proposals for revisions on any part of the Standard may be submitted to UL at any time. Proposals should be submitted via a Proposal Request in UL's On-Line Collaborative Standards Development System (CSDS) at http://csds.ul.com.

UL's Standards for Safety are copyrighted by UL. Neither a printed nor electronic copy of a Standard should be altered in any way. All of UL's Standards and all copyrights, ownerships, and rights regarding those Standards shall remain the sole and exclusive property of UL.

COPYRIGHT © 2013 UNDERWRITERS LABORATORIES INC.

UL COPYRIGHTED MATERIAL –
NOT AUTHORIZED FOR FURTHER REPRODUCTION OR
DISTRIBUTION WITHOUT PERMISSION FROM UL

Documents
Document Sharing Hub

Copyright UL
Provided by IHS under license with UL
No reproduction or networking permitted without license from IHS
Full document details: UL 427 2013

Licensee=North Carolina State Univ/5618801100
Not for Resale, 07/06/2013 19:12:45 MDT

No Text on This Page

UL COPYRIGHTED MATERIAL –
NOT AUTHORIZED FOR FURTHER REPRODUCTION OR
DISTRIBUTION WITHOUT PERMISSION FROM UL

Documents
Document Sharing Hub

Copyright UL
Provided by IHS under license with UL
No reproduction or networking permitted without license from IHS
Full document details: UL 427 2013

Licensee=North Carolina State Univ/5618801100
Not for Resale, 07/06/2013 19:12:45 MDT

CONTENTS

INTRODUCTION

1 Scope 6
2 General 6
2.1 Units of measurement 6
2.2 Terminology 6
2.3 Undated references 6
3 Glossary 6

CONSTRUCTION

4 General 8
5 Assembly 9
5.1 General 9
5.2 Electrical protection 9
6 Accessories 10
7 Enclosure 11
7.1 General 11
7.2 Openings 13
7.3 Doors and covers 19
7.4 Enclosures exposed to weather 20
8 Field-Supply Connections 22
8.1 Permanently connected equipment 22
8.2 Field wiring compartment 23
8.3 Cord-connected units 25
8.4 Grounding 27
9 Internal Wiring and Wiring Methods 28
9.1 General 28
9.2 High voltage circuits 29
9.3 Low voltage circuits 31
9.4 Wiring method 31
10 Separation of Circuits 35
11 Bonding for Grounding 36

ELECTRICAL COMPONENTS

12 Capacitors 38
13 Current-Carrying Parts 39
14 Electric Defrost Heaters 40
15 Fuseholders and Circuit Breakers 41
15.1 Fuseholders 41
15.2 Circuit breakers 42
16 Fuses and Supplementary Protectors 42
17 Insulating Material 43
18 Motors 43
19 Motor Overload Protection 46
19.1 General 46
19.2 Protection of single-phase nonhermetic motors 46
19.3 Protection of three-phase motors 49
19.4 Protection of hermetic refrigerant motor-compressors 49

UL COPYRIGHTED MATERIAL –
NOT AUTHORIZED FOR FURTHER REPRODUCTION OR
DISTRIBUTION WITHOUT PERMISSION FROM UL
Documents
Document Sharing Hub

Copyright UL
Provided by IHS under license with UL
No reproduction or networking permitted without license from IHS
Full document details: UL 427 2013

Licensee=North Carolina State Univ/5618801100
Not for Resale, 07/06/2013 19:12:45 MDT

20 Switches and Controllers 50
21 Transformers 53
22 Valves and Solenoids 53
23 Outlet Boxes, Electrical Cable, Conduit and Tubing 54
24 Electromagnetic Interference Filters 54
25 Relays and Contactors 54
26 Optical Isolators and Semiconductor Devices 55
27 Terminal Blocks 55
28 Spacings 55
28.1 High-voltage circuits 55
28.2 Low-voltage circuits 57
29 Alternate Spacings – Clearances and Creepage Distances 58

REFRIGERATION SYSTEM

30 General 59
30.1 Refrigerant 59
30.2 Pump-down capacity 59
30.3 Refrigerant tubing and fittings 59
31 Refrigerant-Containing Parts 60
32 Pressure-Limiting Device 61
33 Pressure Relief 61
33.1 General 61
33.2 Relief valves 62
33.3 Fusible plugs or rupture members 62
34 Component Refrigeration Systems Integral to Other Appliances 62

PERFORMANCE

35 General 64
35.1 Temperature measurements 64
35.2 Pressure measurements 65
35.3 Test voltage 66
36 Leakage Current Test – Cord Connected Refrigerating Units 66
37 Input Test 66
38 Starting Test 67
39 Temperature and Pressure Test 67
40 Defrost Test 70
41 Dielectric Voltage-Withstand Test 71
42 Condenser Fan Motor Failure Test 72
43 Condenser Water Failure Test 73
44 Overflow Test 73
45 Rain Test 74
46 Strain Relief Test 77
47 Static Loading Test 77
48 Endurance Test – Defrost Heater Control 78
49 Burnout Test 78
50 Overvoltage and Undervoltage Tests 79
51 Current Overload Test – Bonding Conductors and Connections 80
52 Insulation Resistance Test 80
53 Limited Short-Circuit Test 80
53.1 General 80
53.2 Motor overload protective devices 82

UL COPYRIGHTED MATERIAL –
NOT AUTHORIZED FOR FURTHER REPRODUCTION OR
DISTRIBUTION WITHOUT PERMISSION FROM UL

Documents
Document Sharing Hub

Copyright UL
Provided by IHS under license with UL
No reproduction or networking permitted without license from IHS
Full document details: UL 427 2013

Licensee=North Carolina State Univ/5618801100
Not for Resale, 07/06/2013 19:12:45 MDT

53.3 Bonding conductors and connections 83
53.4 Motor circuit conductors and connections 83
54 Maximum Continuous Current Test 83
55 Strength Tests 84
56 Fastener Retainer Test 86
57 Accelerated Aging Test – Electric Heater 86
58 Reliability Test – Heater Termination 87
59 Accelerated Aging Tests on Gaskets, Sealing Compounds, and Adhesives 87
59.1 General 87
59.2 Sealing compound 88
59.3 Adhesives 88
60 Chromic Acid Dropping Test 89
61 Burnout Tests – Electromagnetic Components 90

MANUFACTURING AND PRODUCTION TESTS

62 General 91
63 Production Line Dielectric Voltage-Withstand Tests 91

MARKING

64 General 93
65 Refrigerant Markings 95
66 Permanently Connected Equipment 96
67 Cord Connected Units 99
68 Cautionary Markings 99
69 Accessory Markings 100

INSTRUCTIONS

70 Installation and Operating Instructions 101

SUPPLEMENT SA - REQUIREMENTS FOR REFRIGERATING UNITS EMPLOYING A FLAMMABLE REFRIGERANT IN THE REFRIGERATING SYSTEM

SA1 Scope SA1
SA2 Glossary SA1
SA3 General SA1
SA4 Construction SA2
SA4.1 General SA2
SA4.2 Valves/fittings SA2
SA5 Performance SA3
SA5.1 Leakage test SA3
SA5.2 Ignition test SA4
SA5.3 Temperature test SA5
SA6 Marking, Installation and Operating Instructions SA5
SA6.1 Marking SA5
SA6.2 Installation and operating instructions SA6

UL COPYRIGHTED MATERIAL –
NOT AUTHORIZED FOR FURTHER REPRODUCTION OR
DISTRIBUTION WITHOUT PERMISSION FROM UL
Documents
Document Sharing Hub
Copyright UL
Provided by IHS under license with UL
No reproduction or networking permitted without license from IHS
Full document details: UL 427 2013
Licensee=North Carolina State Univ/5618801100
Not for Resale, 07/06/2013 19:12:45 MDT

INTRODUCTION

1 Scope

1.1 These requirements cover refrigerating units intended for connection in accordance with the National Electrical Code, NFPA 70, to alternating-current (ac) circuits rated not greater than 600 volts.

1.2 This standard also covers component refrigeration systems (self-contained mechanical refrigeration systems), not already covered by a UL standard, that heat, cool or dehumidify as integral (not stand-alone) components of appliances.

1.3 Refrigerating units covered by these requirements employ sealed, hermetic-type motor compressors, and air- or water-cooled condensers.

1.4 These requirements do not cover equipment intended for comfort cooling.

2 General

2.1 Units of measurement

2.1.1 Values stated without parentheses are the requirement. Values in parentheses are explanatory or approximate information.

2.2 Terminology

2.2.1 The term “product” refers to any equipment covered by this standard unless specifically noted otherwise.

2.3 Undated references

2.3.1 Any undated reference to a code or standard appearing in the requirements of this standard shall be interpreted as referring to the latest edition of that code or standard.

3 Glossary

3.1 For the purpose of this Standard the following definitions apply.

3.2 ACCESSORY – An optional electrical device or component intended for installation in or connection to a product for the purpose of modifying or supplementing the functions of the product. It is intended for installation by the user or serviceman.

3.3 CAPILLARY TUBE – Device made of tubing with an outer diameter of less than 3/16 inch (4.7 mm) and used to reduce the pressure of the refrigerant between the condenser and evaporator. It also regulates the refrigerant flow.

3.4 CIRCUITS, ELECTRICAL:

a) High-Voltage – A circuit involving a potential of not more than 600 volts and having circuit characteristics in excess of those of a low-voltage circuit.

UL COPYRIGHTED MATERIAL –
NOT AUTHORIZED FOR FURTHER REPRODUCTION OR
DISTRIBUTION WITHOUT PERMISSION FROM UL
Documents
Document Sharing Hub
Copyright UL
Provided by IHS under license with UL
No reproduction or networking permitted without license from IHS
Full document details: UL 427 2013
Licensee=North Carolina State Univ/5618801100
Not for Resale, 07/06/2013 19:12:45 MDT

b) Low-Voltage – A circuit involving a potential of not more than 30 volts ac, 42.4 volts peak or direct current (dc), and supplied by a primary battery, a standard Class 2 transformer, or a combination of a transformer and fixed impedance which, as a unit, complies with all performance requirements for a Class 2 transformer.

3.5 COMPONENT – A device or fabricated part of the appliance covered by the scope of a safety standard dedicated to the purpose. When incorporated in an appliance, equipment otherwise typically field installed (e.g. luminaire) is considered to be a component. Unless otherwise specified, materials that compose a device or fabricated part, such as thermoplastic or copper, are not considered components.

3.6 CONTROL, DEFROST CYCLE – A control that is intended to regulate a defrost cycle.

3.7 CONTROL, OPERATING – A control intended to start, regulate, or operate the appliance during normal operation. An example would be a thermostat or temperature controller.

3.8 CONTROL, PROTECTIVE (SAFETY) – A control intended to prevent the risk of electric shock, fire, or injury to persons, typically during abnormal operation of the appliance. An example would be a pressure limiting control.

3.9 CONTROL, TEMPERATURE LIMITING – A control that serves to prevent excessive temperature.

3.10 DESIGN PRESSURE – The maximum allowable working pressure for which the refrigerating unit is designed.

3.11 PRESSURE VESSELS – Any refrigerant-containing receptacle of a refrigerating system, other than evaporators (each separate section of which does not exceed 1/2 cubic foot (0.01 m^3) of refrigerant-containing volume), evaporator coils, compressors, condenser coils, controls, headers and piping.

3.12 REFRIGERATING UNIT – A complete refrigeration system consisting of a hermetic-motor compressor, condenser, evaporator, refrigerant control, electrical controls, wiring, and associated refrigerant containing components including tubing; and may include a defrost system. These systems are primarily used to refrigerate cooling rooms and warehouses intended for the storage of food and other perishable products.

3.13 REFRIGERATION SYSTEM, COMPONENT – A self-contained mechanical refrigeration system performing a heating, cooling or dehumidification function only as a component system of an appliance. It collectively consists of a hermetic-motor compressor, condenser, evaporator, refrigerant control, and associated refrigeration containing tubing and components. A defrost system may also be included. The evaluation of a component refrigeration system can only be determined in combination with the end product application. The reverse cycle heating function of a heat pump dryer is an example of a component refrigeration system.

3.14 ULTIMATE STRENGTH – The highest stress level which a refrigerant-containing component can tolerate without rupture.

UL COPYRIGHTED MATERIAL –
NOT AUTHORIZED FOR FURTHER REPRODUCTION OR
DISTRIBUTION WITHOUT PERMISSION FROM UL

Documents
Document Sharing Hub

Copyright UL
Provided by IHS under license with UL
No reproduction or networking permitted without license from IHS
Full document details: UL 427 2013

Licensee=North Carolina State Univ/5618801100
Not for Resale, 07/06/2013 19:12:45 MDT

CONSTRUCTION

4 General

4.1 Ferrous metal parts used to support or retain electrical components in position shall be protected against corrosion by metallic or nonmetallic coatings, such as plating or painting.

Exception: This requirement does not apply to parts, such as washers, screws, bolts, and similar parts, when corrosion of such unprotected parts would not affect compliance with the requirements in this standard.

4.2 Exposed unimpregnated asbestos material shall not be used in an air handling compartment. The unprotected edge of a gasket sandwiched between two parts is considered to be exposed.

4.3 A component shall:

a) Comply with the safety standard covering that component;

b) Be used in accordance with its rating(s) established for the intended conditions of use;

c) Be used within its established use limitations or conditions of acceptability;

d) Comply with the applicable requirements of this end product standard; and

e) Not contain mercury.

Exception: A component of a product covered by this standard is not required to comply with a specific component requirement that:

a) Involves a feature or characteristic not required in the application of the component in the product,

b) Is superseded by a requirement in this standard, or

c) Is separately investigated when forming part of another component, provided the component is used within its established ratings and limitations.

4.4 A component that is also required to perform other necessary functions, such as overcurrent protection, ground-fault circuit interruption, surge suppression, any other similar functions, or any combination thereof, shall comply additionally with the requirements of the applicable standard(s) covering products that provide those functions.

Exception: Where these other functions are not required for the application and not identified as part of markings, instructions, or packaging for the appliance, the additional component standard(s) need not be applied.

UL COPYRIGHTED MATERIAL –
NOT AUTHORIZED FOR FURTHER REPRODUCTION OR
DISTRIBUTION WITHOUT PERMISSION FROM UL

Documents
Document Sharing Hub

Copyright UL
Provided by IHS under license with UL
No reproduction or networking permitted without license from IHS
Full document details: UL 427 2013

Licensee=North Carolina State Univ/5618801100
Not for Resale, 07/06/2013 19:12:45 MDT

5 Assembly

5.1 General

5.1.1 When a product is provided in more than one assembly, the separate assemblies shall be constructed to be used together, and the requirements are based on the use of matched assemblies. Interconnection of the assemblies shall result in a complete factory charged refrigeration system.

5.2 Electrical protection

5.2.1 Uninsulated live parts of high-voltage circuits shall be located, guarded, or enclosed as indicated in 5.2.2 – 5.2.9 and 7.2.9 and 7.2.10.

5.2.2 In addition to the requirements in 7.2.9 and 7.2.10, uninsulated live parts inside the enclosure that are likely to be contacted by persons performing operations such as refilling, relamping, replacing fuses, resetting manual-reset devices, oiling motors, or other such intended service operations shall be located, guarded, or enclosed to prevent unintentional contact unless tools are required to expose the live part. See 69.2.

5.2.3 Electrical components shall be located or enclosed so that live parts will not be wetted by liquids due to accumulation, overflow, splashing, leakage, cleaning, or defrost.

5.2.4 A condensate pan shall be constructed and located so that overflow due to a blocked drain will not wet live parts or enamel insulated wire.

5.2.5 An overflow spout, drain hole, cutout, or similar part in the condensate pan is not prohibited for preventing dripping of water on electrical parts. An overflow test, see Section 44, is to be conducted when it is not evident that the product complies with 5.2.4.

5.2.6 A switch, an attachment-plug receptacle, a motor-attachment plug, or similar component shall be secured in position and, shall be prevented from turning. See 5.2.7.

Exception: The requirement that a switch be prevented from turning shall be waived when all of the following conditions are met:

a) The switch is to be of a plunger or other type that does not tend to rotate when operated. A toggle switch is considered to be subject to forces that tend to turn the switch during the operation of the switch.

b) The means of mounting the switch make it unlikely that operation of the switch will loosen it.

c) The spacings are not reduced below the minimum required values when the switch rotates.

d) The operation of the switch is by mechanical means rather than direct contact by persons.

5.2.7 The means for preventing rotation mentioned in 5.2.6 shall consist of more than friction between surfaces. A toothed lock washer that provides both spring take-up and an interference lock is acceptable as means for preventing a small stem-mounted switch or other device having a single-hole mounting means from turning.

UL COPYRIGHTED MATERIAL –
NOT AUTHORIZED FOR FURTHER REPRODUCTION OR
DISTRIBUTION WITHOUT PERMISSION FROM UL

Documents
Document Sharing Hub

Copyright UL
Provided by IHS under license with UL
No reproduction or networking permitted without license from IHS
Full document details: UL 427 2013

Licensee=North Carolina State Univ/5618801100
Not for Resale, 07/06/2013 19:12:45 MDT

5.2.8 An uninsulated live part and a part that supports a live part shall be secured to the base or mounting surface so that it will be prevented from turning or shifting in position when such motion results in a reduction of spacings below the minimum acceptable values. See Spacings, Section 28. Friction between surfaces is not acceptable as a means to prevent shifting or turning of a live part, but a lock washer as described in 5.2.7 is acceptable.

5.2.9 Flammable or electrically conductive thermal or acoustical insulation shall not contact uninsulated live parts.

6 Accessories

6.1 A product having provisions for the use of electrical accessories to be attached in the field shall be constructed so that the use of these accessories will not result in a risk of fire, electric shock, or injury to persons.

6.2 The product shall comply with the requirements of this Standard with or without the accessory installed.

6.3 Installation of accessories by the user shall be restricted to an arrangement that can be accomplished by means of receptacles and plug-in connectors. See 69.1 and 69.2.

6.4 The installation of accessories by service personnel shall be by means of receptacles, plug-in connectors, wiring terminals, insulated wire connectors, or by connection to existing wiring terminals. Any installation that requires the cutting of wiring or the soldering of connections by the installer is not acceptable. Installations that require cutting, drilling, or welding are not acceptable in electrical enclosures and in other areas where such operations may damage electrical or refrigeration components and wiring within the enclosure.

6.5 Strain-relief means shall be provided for the wiring in the accessory when there is a possibility of transmitting stress to the terminal connections during installation. See Strain Relief Test, Section 46.

6.6 All terminals and wiring intended to be field connected shall be identified on the accessory, on the product when connections are made between the accessory and the product, and on the wiring diagram(s).

6.7 Except where it is obvious, the mounting location of the accessory shall be indicated on the product. When the mounting location is obvious due to the function of the accessory and arrangement of the product, and instructions are provided covering the installation and location for the accessory, the mounting location of the accessory need not be indicated on the product.

6.8 As part of the investigation, accessories are to be trial installed to determine that:

a) Their installation is feasible and

b) The instructions are detailed and correct.

UL COPYRIGHTED MATERIAL –
NOT AUTHORIZED FOR FURTHER REPRODUCTION OR
DISTRIBUTION WITHOUT PERMISSION FROM UL

Documents
Document Sharing Hub

Copyright UL
Provided by IHS under license with UL
No reproduction or networking permitted without license from IHS
Full document details: UL 427 2013

Licensee=North Carolina State Univ/5618801100
Not for Resale, 07/06/2013 19:12:45 MDT

7 Enclosure

7.1 General

7.1.1 Each enclosure shall be formed and assembled so that it will have the strength and rigidity required to resist the conditions of intended use without resulting in a risk of fire, electric shock, or injury to persons due to total or partial collapse with resulting reduction of spacings, loosening or displacement of parts, or other serious defects. Enclosures for individual electrical components, outer enclosures, and combinations of the two are considered in determining compliance with this requirement.

7.1.2 Among the factors that are taken into consideration when evaluating an enclosure are:

a) Mechanical strength,

b) Resistance to impact,

c) Moisture-absorptive properties,

d) Flammability,

e) Resistance to distortion at temperatures to which the material may be subjected under conditions of use, and

f) Resistance to corrosion.

7.1.3 For a nonmetallic enclosure or part of an enclosure, all of the factors in 7.1.2, including the effect of exposure to weathering when for outdoor use, are considered with respect to aging.

7.1.4 The enclosure(s) of a product shall reduce the risk of mechanical damage to wiring, electrical components, and refrigerant tubing.

7.1.5 The enclosure shall prevent the emission of molten metal, burning insulation, flaming particles, or the like through openings onto flammable material, including the surface upon which the product is mounted.

7.1.6 Unless it can be determined that failure of an electrical component will not result in a risk of fire or electric shock, components, such as controls, solenoids, starting relays, and switches, shall be individually enclosed except at terminals.

Exception: Electrical parts, within the outer cabinet need not be individually enclosed when the assembly conforms with the following:

a) Their construction and location with respect to openings in the outer cabinet will not result in the emission of flame or molten metal through openings in the cabinet or when it can be shown that failure of the component would not result in a risk of fire,

b) There are no openings in the bottom of the compartment in which the part is located which would permit dropping of molten metal, and the like on flammable material, and

c) The part is not in proximity to flammable material other than electrical insulation.

UL COPYRIGHTED MATERIAL –
NOT AUTHORIZED FOR FURTHER REPRODUCTION OR
DISTRIBUTION WITHOUT PERMISSION FROM UL

Documents
Document Sharing Hub

Copyright UL
Provided by IHS under license with UL
No reproduction or networking permitted without license from IHS
Full document details: UL 427 2013

Licensee=North Carolina State Univ/5618801100
Not for Resale, 07/06/2013 19:12:45 MDT

7.1.7 A sheet metal enclosure is evaluated with respect to its size, shape, metal thickness, and use in particular application. The use of sheet steel having a thickness of less than 0.026 inch (0.66 mm) (No. 22 MSG) when uncoated or 0.029 inch (0.74 mm) (No. 22 GSG) when galvanized or of nonferrous sheet metal having a thickness of less than 0.036 inch (0.91 mm) (18 AWG) is not recommended except for relatively small areas or for surfaces that are curved or otherwise reinforced.

7.1.8 Sheet metal to which a wiring system is to be connected in the field shall have a thickness not less than 0.032 inch (0.81 mm) (No. 20 MSG) when uncoated steel, not less than 0.034 inch (0.86 mm) (No. 20 GSG) when galvanized steel, and not less than 0.045 inch (1.14 mm) (16 AWG) when nonferrous.

7.1.9 When threads for the connection of conduit are tapped through a hole in an enclosure wall, or when an equivalent construction is employed, there shall be not less than three or more than five threads in the metal, and the construction of the device shall be such that a conduit bushing can be properly attached.

7.1.10 When threads for the connection of conduit are not tapped through a hole in an enclosure wall, conduit hub, or similar part, there shall be not less than 3-1/2 threads in the metal, and there shall be a smooth, rounded inlet hole for the conductors which shall afford protection to the conductors equivalent to that provided by a standard conduit bushing and which shall have an internal diameter the same as that of the corresponding trade size of rigid conduit.

7.1.11 A knockout in a sheet metal enclosure shall be secured in a place, but shall be capable of being removed without undue deformation of the enclosure which would result in damage to electrical components or reduction in electrical spacings or both. See 7.1.12.

7.1.12 A knockout shall remain in place when a force of 10 pounds (44 N) is applied at right angles to the knockout by a 1/4 inch (6.4 mm) diameter mandrel with a flat end. The mandrel is to be applied at the point most liable to cause movement of the knockout.

7.1.13 A knockout shall be provided with a flat surrounding surface for seating of a conduit bushing and shall be located so that installation of a bushing at any knockout likely to be used during installation will not result in spacings between uninsulated live parts and the bushing of less than those required by this Standard.

7.1.14 In measuring a spacing between an uninsulated live part and a bushing installed in a knockout, it is to be assumed that a bushing having the dimensions indicated in Table 7.1 is in place in conjunction with a single locknut installed on the outside of the enclosure.

7.1.15 Steel enclosures shall be protected against corrosion by metallic or nonmetallic coatings such as plating or painting. For enclosures exposed to weather see 7.4.1 – 7.4.9.

UL COPYRIGHTED MATERIAL –
NOT AUTHORIZED FOR FURTHER REPRODUCTION OR
DISTRIBUTION WITHOUT PERMISSION FROM UL

Documents
Document Sharing Hub

Copyright UL
Provided by IHS under license with UL
No reproduction or networking permitted without license from IHS
Full document details: UL 427 2013

Licensee=North Carolina State Univ/5618801100
Not for Resale, 07/06/2013 19:12:45 MDT

Table 7.1
Knockout or hole sizes and dimensions of bushings

Trade size of conduit,		Knockout or hole diameter,		Bushing dimensions			
				Overall diameter,		Height,	
inches	(mm O.D)	inches	(mm)	inches	(mm)	inches	(mm)
1/2	21.3	7/8	22.2	1	25.4	3/8	9.5
3/4	26.7	1-3/32	27.8	1-15/64	31.4	27/64	10.7
1	33.4	1-23/64	34.5	1-19/32	40.5	33/64	13.1
1-1/4	42.3	1-23/32	43.7	1-15/16	49.2	9/16	14.3
1-1/2	48.3	1-31/32	50.0	2-13/64	56.0	19/32	15.1
2	60.3	2-15/32	62.7	2-45/64	68.7	5/8	15.9

7.2 Openings

7.2.1 When the refrigerating unit is installed in its intended manner (see Installation and Operating Instructions, Section 70), openings in the enclosure shall be constructed or located to reduce the risk of injury to persons due to unintentional contact with:

a) Moving parts such as fan blades, blower wheels, gears, and belts, and

b) Surfaces that exceed the temperatures specified in Table 39.1(D2) and (D3).

7.2.2 The minor dimension of the openings described in 7.2.1 shall not exceed 3 inches (76.2 mm). In evaluating openings, parts of the enclosure – such as covers, panels, and grilles – are to be removed unless tools are required for their removal or a moving part is rendered inoperative through the use of interlocking devices when the part is exposed.

Exception: Openings may be larger than 3 inches when the part is unlikely to be contacted because of the location of fixed components, such as baffles, water and refrigerant tubing, and drain tubes.

7.2.3 Parts, such as covers, panels, or grilles, that serve as guards may be removable without tools when:

a) A warning marking as described in 68.1 identifies the guarded moving or hot part;

b) The part is intended to be removed only by an attendant or service personnel; and

c) The part is secured by fasteners or a combination of fasteners and hinges, tabs, or similar part. Disengagement of any one of the fasteners, hinges, or tabs of a guard shall not result in exposure of moving parts or hot parts.

7.2.4 The fasteners mentioned in 7.2.3(c):

a) Shall be secured to the unit to prevent their loss. See Fastener Retainer Test, Section 56.

b) Shall require manual operation such as a push, pull, or turning action to disengage. Magnetic catches and friction-type fasteners such as clips are not acceptable. Mating parts of the fastening means shall be metal.

UL COPYRIGHTED MATERIAL –
NOT AUTHORIZED FOR FURTHER REPRODUCTION OR
DISTRIBUTION WITHOUT PERMISSION FROM UL
Documents
Document Sharing Hub

Copyright UL
Provided by IHS under license with UL
No reproduction or networking permitted without license from IHS
Full document details: UL 427 2013

Licensee=North Carolina State Univ/5618801100
Not for Resale, 07/06/2013 19:12:45 MDT

7.2.5 Moving parts that may cause injury to persons, such as fan blades, blower wheels, or belts, shall be guarded or enclosed so that the distance from any opening to the part does not exceed the values indicated in Column B of Table 7.2. The distance from an opening to a moving part shall be in accordance with Column B of Table 7.2. For an opening having a minor dimension intermediate between two of the values included in the table, the distance from the opening to the moving part shall not be less than that found by appropriate interpolation between the corresponding values in Column B of the table. The minor dimension of the opening is determined by the largest hemispherically tipped cylindrical probe that can be inserted through the opening with a force of 2.5 pounds (11.1 N).

Exception No. 1: When a product is intended for use in a walk-in cooler or refrigerated warehouse and is intended to be installed so that the lowest position of a moving part will be 7 feet (2.1 m) or more above floor level, clearances to such moving parts shall not be less than indicated in Column C of Table 7.2. The product shall be marked in accordance with 64.12 and 68.5.

Exception No. 2: When an opening consists of a slot having a major straight line dimension of less than 2 inches (50.8 mm) or a hole 1 inch (25.4 mm) or less in diameter, the distance to a moving part shall be in accordance with Table 7.3. For an opening having a minor dimension intermediate between two of the values included in the table, the distance from the opening to the moving part shall not be less than that found by interpolation between the corresponding values shown in the appropriate column.

7.2.6 A moving part is not to be considered when judging compliance with 7.2.5 when:

a) The part is unlikely to be contacted through the opening because of the location of fixed components, including baffles or

b) The part is made inoperative when exposed through the use of interlocking devices.

Table 7.2
Minimum distance from an opening to a moving part

A		B		C	
Minor dimensions of opening[a],		Clearance from openings less than 7 feet (2.1 m) above floor level[c],		Clearance from openings 7 feet (2.1 m) or more above floor level[c],	
inches	(mm)	inches	(mm)	inches	(mm)
1/4	6.4	1/2	12.7	3/8	9.5
3/8	9.5	1-1/2	38.1	1-1/4	31.8
1/2	12.7	2-1/2	63.5	2	50.8
3/4	19.1	4-1/2	114	3-5/8	92.1
1	25.4	6-1/2	165	5-1/4	133.4
1-1/2	38.1	10-1/2	267	8-3/8	212.7
2	50.8	14-1/2	368	11-5/8	295.3
Over 2[b]	Over 50.8	30	762	30	762.0

[a] Openings less than 1/4 inch (6.4 mm) are not to be considered.
[b] But not more than 3 inches (76.2 mm). See 7.2.2.
[c] Also applies to hot parts. See 7.2.7.

UL COPYRIGHTED MATERIAL –
NOT AUTHORIZED FOR FURTHER REPRODUCTION OR
DISTRIBUTION WITHOUT PERMISSION FROM UL
Documents
Document Sharing Hub

Copyright UL
Provided by IHS under license with UL
No reproduction or networking permitted without license from IHS
Full document details: UL 427 2013

Licensee=North Carolina State Univ/5618801100
Not for Resale, 07/06/2013 19:12:45 MDT

Table 7.3
Minimum distances from round holes or slots having a major dimension less than 2 inches (50.8 mm) to moving parts

Minor dimension of opening,		Minimum distance from opening to moving part[a]			
		Round holes,		Slots,	
inches	(mm)	inches	(mm)	inches	(mm)
1/4	6.4	1/8	3.2	1/2	12.7
3/8	9.5	1	25.4	1-1/2	38.1
1/2	12.7	2	50.8	2-1/2	63.5
3/4	19.1	3-1/4	82.6	3-1/4	82.6
1	25.4	4	102.0	4	102.0

NOTE – Table 7.2 applies when major dimension of slot is 2 inches (50.8 mm) or greater.
[a] Also applies to hot parts. See 7.2.7 and 7.2.8.

7.2.7 When the product is tested in accordance with the Temperature and Pressure Test, Section 39, and the Defrost Test, Section 40, surfaces that have temperature rises that exceed the values specified in items D2 and D3 of Table 39.1, shall be guarded in accordance with 7.2.5 to reduce the risk of injury to persons due to contact with these surfaces.

Exception: The temperature of a sheath of an exposed defrost heater may exceed the value specified in Table 39.1 items D2 and D3 when the heater is in direct contact with the fins of the evaporator coil for the exposed length of the heater and the refrigerating unit is:

a) Intended for installation such that the lowest part of the exposed defrost heater is 7 feet (2.1 m) or more above floor level and is marked in accordance with 68.5 and 68.6 or

b) For use with a walk-in cooler or refrigerated warehouse and is marked in accordance with 64.12 and 68.6.

7.2.8 The sheath of a heater element, as installed in the complete refrigerating unit, shall be protected against mechanical damage. A copper or steel sheath is considered to be protected against mechanical damage when the sheath:

a) Is at least 0.016 inches (0.41 mm) thick or

b) Cannot be contacted when the probe illustrated in Figure 7.2 is inserted with a force of 5 pounds-force (22 N).

7.2.9 When an opening in the enclosure permits the entrance of a 3/4 inch (19.1 mm) diameter rod, the conditions described in Figure 7.1 are to be used in determining compliance with the requirements. The minor dimension of the opening shall not exceed 1 inch (25.4 mm) in any case.

7.2.10 When an opening in the enclosure will not permit the entrance of a 3/4 inch (19.1 mm) diameter rod, the probe illustrated in Figure 7.2 shall not touch any uninsulated live parts and the probe illustrated in Figure 7.3 shall not touch any film-coated wire when inserted through the opening. The probe shall not pass through grilles, screens, louvers, or the like when a force of 5 pounds (22 N) is applied.

UL COPYRIGHTED MATERIAL –
NOT AUTHORIZED FOR FURTHER REPRODUCTION OR
DISTRIBUTION WITHOUT PERMISSION FROM UL
Documents
Document Sharing Hub

Copyright UL
Provided by IHS under license with UL
No reproduction or networking permitted without license from IHS
Full document details: UL 427 2013

Licensee=North Carolina State Univ/5618801100
Not for Resale, 07/06/2013 19:12:45 MDT

Figure 7.1
Opening in enclosure

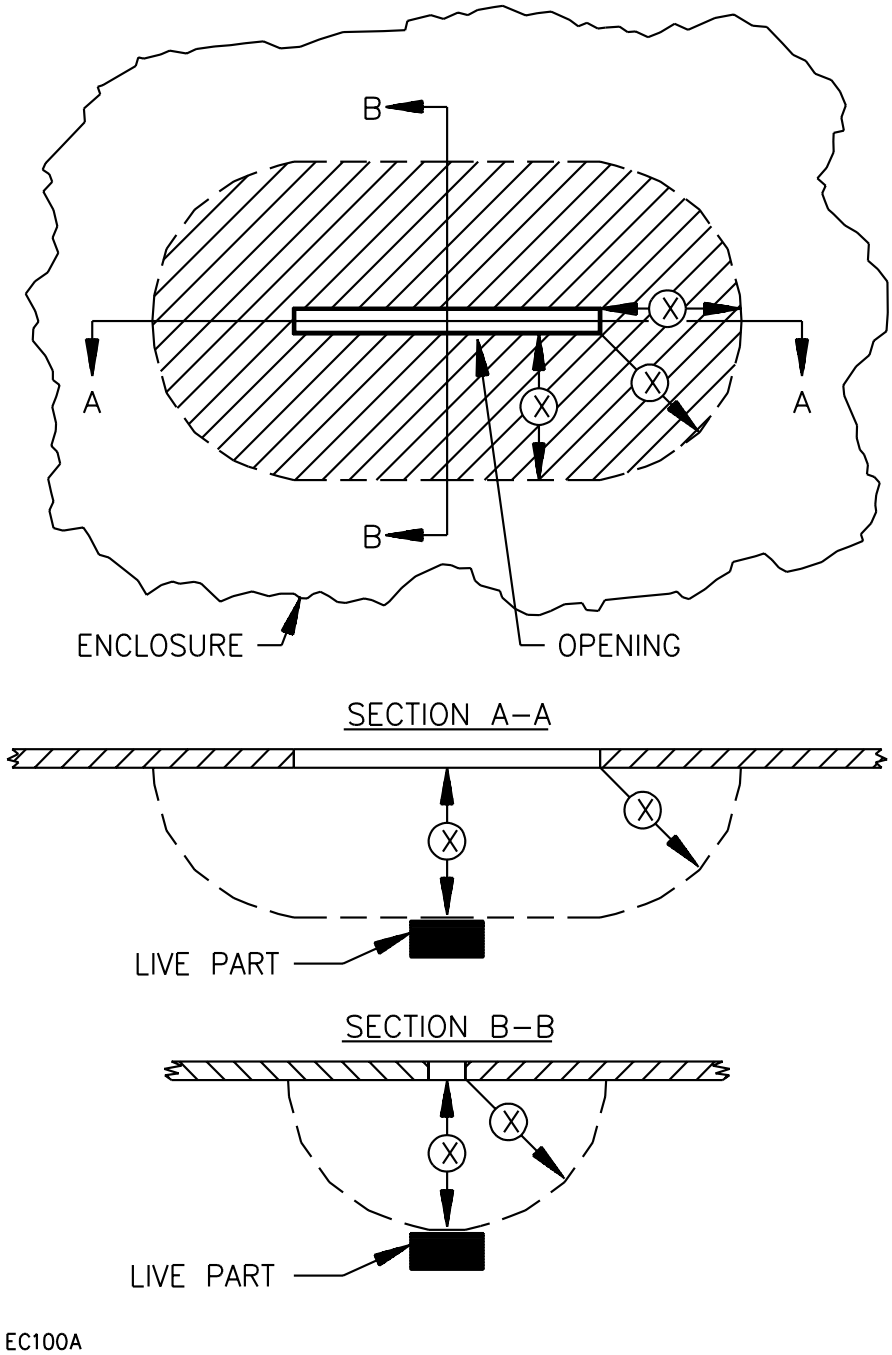

The opening is acceptable when, within the enclosure, there is no uninsulated live part or film-coated wire (1) less than X inches (mm) from the perimeter of the opening, as well as (2) within the volume generated by projecting the perimeter X inches (mm) normal to its plane. X equals five times the diameter of the largest diameter rod that can be inserted through the opening, but not less than 4 inches (102 mm).

UL COPYRIGHTED MATERIAL –
NOT AUTHORIZED FOR FURTHER REPRODUCTION OR
DISTRIBUTION WITHOUT PERMISSION FROM UL

Documents
Document Sharing Hub

Copyright UL
Provided by IHS under license with UL
No reproduction or networking permitted without license from IHS
Full document details: UL 427 2013

Licensee=North Carolina State Univ/5618801100
Not for Resale, 07/06/2013 19:12:45 MDT

Figure 7.2
Probe

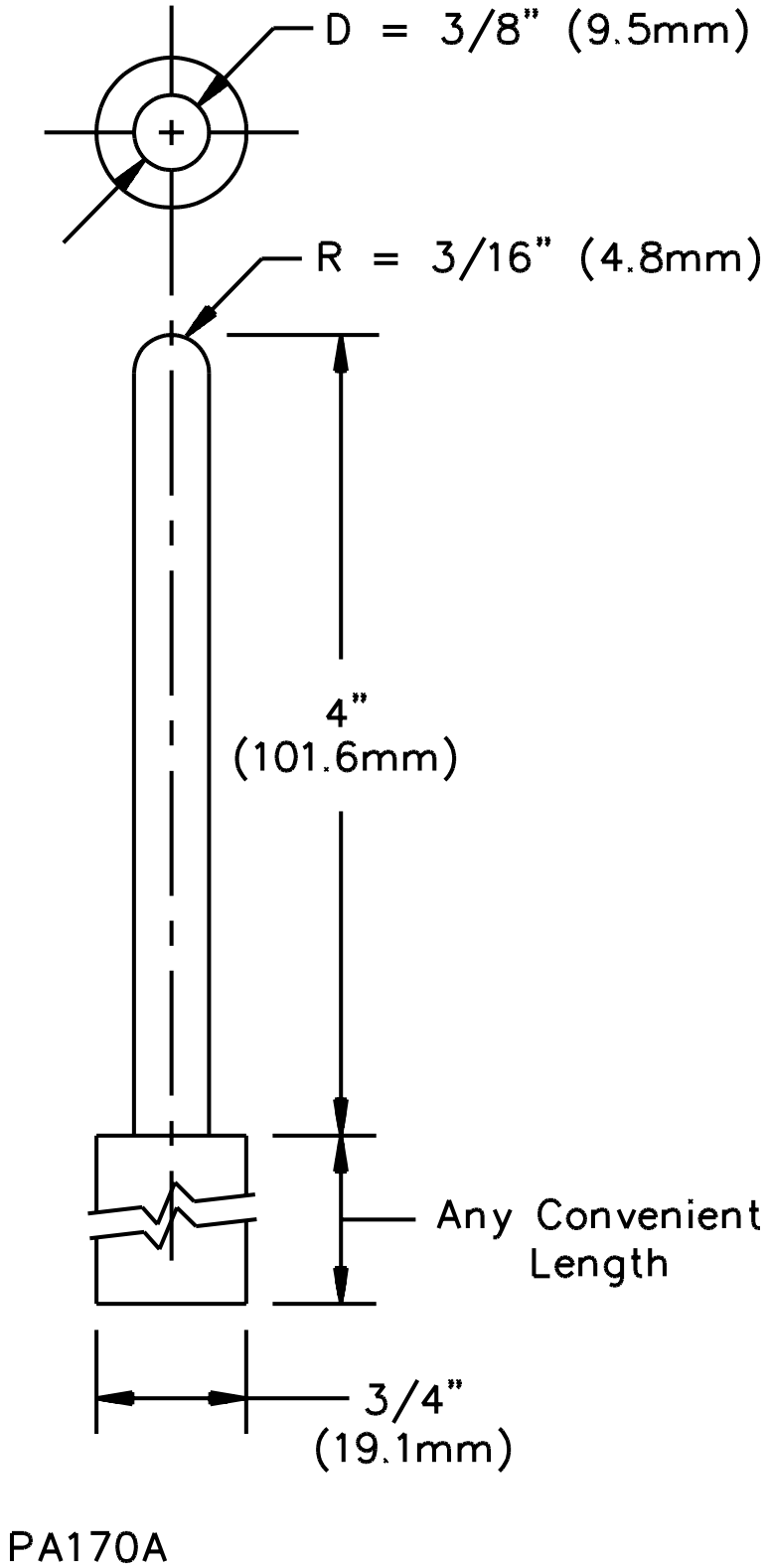

UL COPYRIGHTED MATERIAL –
NOT AUTHORIZED FOR FURTHER REPRODUCTION OR
DISTRIBUTION WITHOUT PERMISSION FROM UL

Documents
Document Sharing Hub

Copyright UL
Provided by IHS under license with UL
No reproduction or networking permitted without license from IHS
Full document details: UL 427 2013

Licensee=North Carolina State Univ/5618801100
Not for Resale, 07/06/2013 19:12:45 MDT

Figure 7.3
Probe

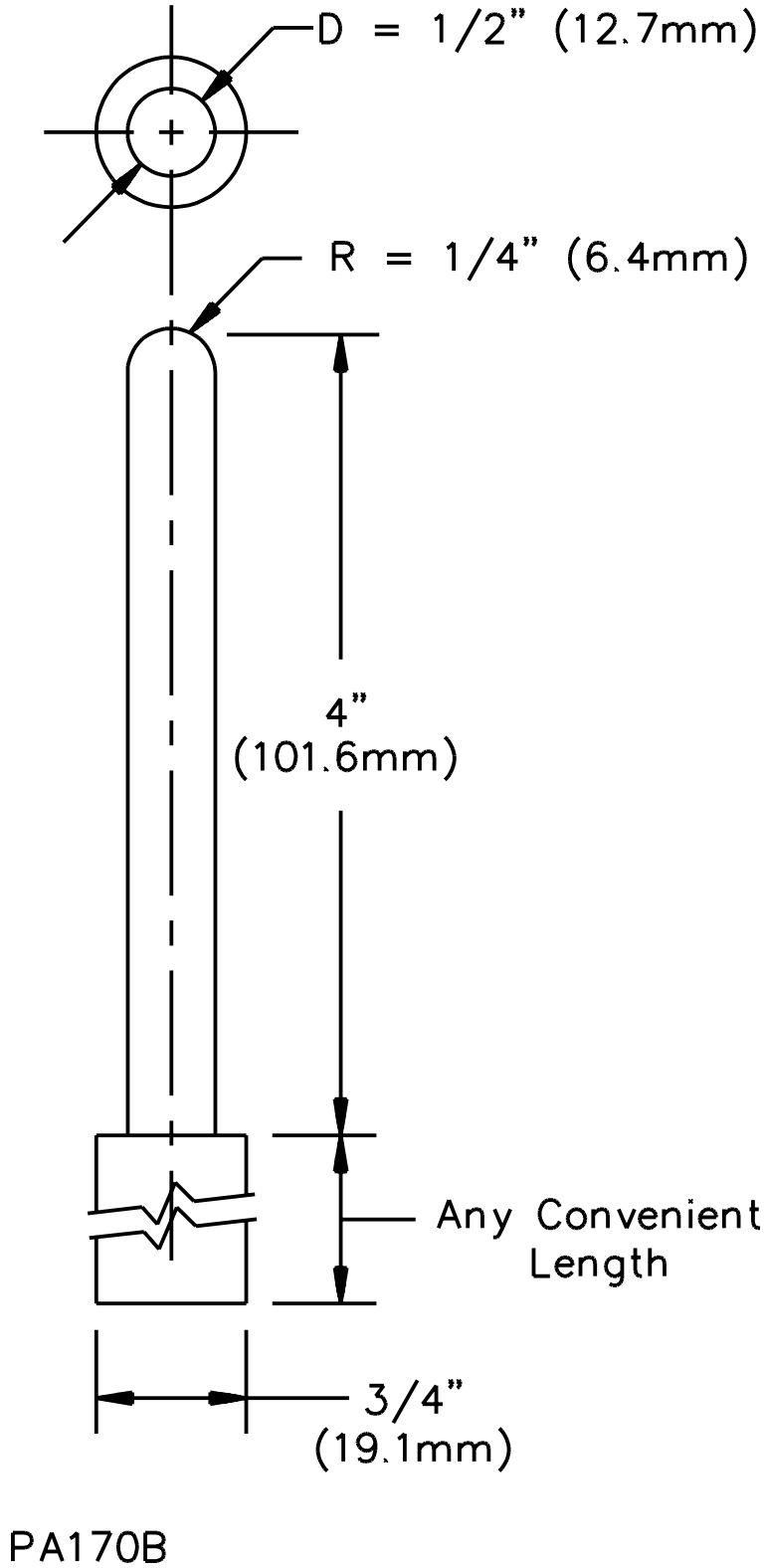

UL COPYRIGHTED MATERIAL –
NOT AUTHORIZED FOR FURTHER REPRODUCTION OR
DISTRIBUTION WITHOUT PERMISSION FROM UL

Documents
Document Sharing Hub

Copyright UL
Provided by IHS under license with UL
No reproduction or networking permitted without license from IHS
Full document details: UL 427 2013

Licensee=North Carolina State Univ/5618801100
Not for Resale, 07/06/2013 19:12:45 MDT

7.3 Doors and covers

7.3.1 Louvers and other openings in the enclosure shall be constructed and located to prevent unintentional contact with uninsulated live parts. Parts such as covers, panels, grilles used as part of the enclosure are to be removed unless tools are required for their removal or an interlock is provided. See 7.3.2.

7.3.2 Service covers of panels in the outer enclosure shall require the use of tools for removal or shall be provided with an interlocking mechanism when they give access to unenclosed, uninsulated live parts or hazardous moving parts.

7.3.3 An interlocking mechanism is considered to comply with 7.3.2 when it:

a) Must be engaged in the closed position of the cover before parts are energized and

b) Will secure the cover in the closed position when engaged.

7.3.4 A hinged panel or cover shall be positioned or arranged so that it is not likely to fall or swing due to gravity or vibration in such a manner as to cause injury to persons from the panel or cover, from other hazardous moving parts, or from uninsulated live parts.

7.3.5 The assembly shall be arranged so that an overcurrent protective device, such as a fuse, can be replaced and manual-reset devices can be reset without removing parts other than a service cover(s) or panel(s) and the cover or door enclosing the device.

7.3.6 A required protective device shall be inaccessible from outside the enclosure without opening a door or cover; except that the operating handle of a circuit breaker, the reset button or a manually resettable motor protector, the reset button of a manually resettable pressure switch, and similar parts may project outside the enclosure.

7.3.7 An opening in an outer enclosure around a handle, reset button, or other control member is not acceptable when the clearance between the control member and the edge of the opening is more than 1/8 inch (3.2 mm) for any setting or position of the control member.

7.3.8 Each cover for enclosure of fuses in high-voltage circuits, shall be hinged. Covers for manual-reset, overload-protective device enclosures shall be hinged when it is required to open the cover to reset the device.

Exception: A hinged cover is not required where the only fuses enclosed are:

a) Supplementary type control circuit fuses, provided the fuses and control circuit loads, other than a fixed control circuit load, such as a pilot lamp, are within the same enclosure, or

b) Supplementary type fuses of 2 amperes or less for small auxiliary resistance heaters, such as crankcase heaters, with a maximum rating of 100 watts, or

c) An extractor-type fuse with its own enclosure, or

d) Fuses in low-voltage circuits.

UL COPYRIGHTED MATERIAL –
NOT AUTHORIZED FOR FURTHER REPRODUCTION OR
DISTRIBUTION WITHOUT PERMISSION FROM UL

Documents
Document Sharing Hub

Copyright UL
Provided by IHS under license with UL
No reproduction or networking permitted without license from IHS
Full document details: UL 427 2013

Licensee=North Carolina State Univ/5618801100
Not for Resale, 07/06/2013 19:12:45 MDT

7.3.9 Hinged covers, where required, shall not depend solely upon screws or other similar means to hold them closed, but shall be provided with a latch or the equivalent.

7.3.10 A spring latch, a magnetic latch, a dimple, or any other mechanical arrangement that will hold the door in place and will require some effort on the user's part to open it is considered to be a means for holding the door in place as required in 7.3.9. When provided as the sole means for securing the cover or panel, a cover interlocking mechanism as described in 7.3.3 is considered to comply with 7.3.8.

7.3.11 A door or cover giving direct access to fuses in other than low-voltage circuits shall shut closely against a 1/4 inch (6.4 mm) rabbet or shall have either turned flanges for the full length of four edges or angle strips fastened to it. Flanges or angle strips shall fit closely with the outside of the wall of the box proper and shall overlap the edges of the box not less than 1/2 inch (12.7 mm). A special construction, such as a fuse enclosure, located within an outer enclosure, or a flange and rabbet combination that affords the equivalent protection is acceptable.

7.3.12 Strips used to provide rabbets, or angle strips fastened to the edges of the door shall be secured at not less than two points, not more than 1-1/2 inches (38.1 mm) from each end of each strip, and at points between these end fastenings, not more than 6 inches (152 mm) apart.

7.4 Enclosures exposed to weather

7.4.1 Sheet steel cabinets and electrical enclosures exposed to the effects of weathering shall be protected against corrosion by the means shown in Table 7.4 or by other metallic or nonmetallic coatings which provide equivalent protection. This requirement is not applicable to a metal part, such as a decorative grille, that is not required for conformance with this Standard.

Table 7.4
Corrosion protection

Type of cabinet and enclosure	No. 16 MSG (0.056 inch) and heavier	Lighter than No. 16 MSG
Outer cabinets which protect motors, wiring, or enclosed current-carrying parts	See 7.4.2	See 7.4.3
Inside enclosures which protect current-carrying parts other than motors	See 7.4.2	See 7.4.3
Outer cabinets which are the sole enclosure of current-carrying parts	See 7.4.3	See 7.4.3

7.4.2 To comply with the applicable requirement in Table 7.4, one of the following coatings shall be used:

a) Hot-dipped, mill-galvanized sheet steel conforming with the Coating Designation G60 or A60 in Table 1 of the Standard Specification for Steel Sheet, Zinc-Coated (Galvanized) or Zinc-Iron Alloy-Coated (Galvannealed) by the Hot-Dip Process, ASTM A653/A653M , with not less than 40 percent of the zinc on any side based on the minimum single spot test requirement in this ASTM Specification. The weight of zinc coating may be determined by any suitable method; however, in case of question, the weight of coating shall be established in accordance with the Standard Test Method for the Weight [Mass] of Coating Iron and Steel Articles With Zinc or Zinc-Alloy Coatings, ASTM A90/A90M. An A60 (alloyed) coating shall also comply with 7.4.4.

UL COPYRIGHTED MATERIAL –
NOT AUTHORIZED FOR FURTHER REPRODUCTION OR
DISTRIBUTION WITHOUT PERMISSION FROM UL
Documents
Document Sharing Hub

Copyright UL
Provided by IHS under license with UL
No reproduction or networking permitted without license from IHS
Full document details: UL 427 2013
Licensee=North Carolina State Univ/5618801100
Not for Resale, 07/06/2013 19:12:45 MDT

b) A zinc coating, other than that provided on hot-dipped, mill-galvanized sheet steel, uniformly applied to an average thickness of not less than 0.00041 inch (0.0104 mm) on each surface with a minimum thickness of 0.00034 inch (0.0086 mm). The thickness of the coating shall be established by the Chromic Acid Dropping Test. An annealed coating shall also comply with 7.4.4.

c) Two coats of an organic finish of the epoxy or alkyd-resin type or other outdoor paint on both surfaces. The suitability of the paint may be determined by consideration of its composition or by corrosion tests.

7.4.3 To comply with the applicable requirement in Table 7.4, one of the following coatings shall be used:

a) Hot-dipped, mill-galvanized sheet steel conforming with the Coating Designation G90 in Table 1 of the Specification for Steel Sheet, Zinc-Coated (Galvannealed) or Zinc-Iron Alloy-Coated (Galvannealed) by the Hot-Dip Process, ASTM A653/A653M, with not less than 40 percent of the zinc on any side based on the minimum single spot test requirements in this ASTM Specification. The weight of zinc coating may be determined by any suitable method; however, in case of question, the weight of coating shall be established in accordance with the Test Method for Weight [Mass] of Coating on Iron and Steel Articles with Zinc or Zinc-Alloy Coatings, ASTM A90/A90M.

b) A zinc coating, other than that provided on hot-dipped, mill-galvanized sheet steel, uniformly applied to an average thickness of not less than 0.00061 inch (0.0155 mm) on each surface with a minimum thickness of 0.00054 inch (0.0137 mm). The thickness of the coating shall be established by the Chromic Acid Dropping Test, Section 60. An annealed coating shall also comply with 7.4.4.

c) A cadmium coating not less than 0.001 inch (0.03 mm) in thickness on both surfaces. The thickness of coating shall be established by the Chromic Acid Dropping Test.

d) A zinc coating conforming with 7.4.2 (a) or (b) with one coat of outdoor paint as specified in 7.4.2(c).

e) A cadmium coating of not less than 0.00075 inch (0.0191 mm) in thickness on both surfaces with one coat of outdoor paint on both surfaces or not less than 0.0005 inch (0.013 mm) in thickness on both surfaces with two coats of outdoor paint on both surfaces. The thickness of the cadmium coating is to be established by the Chromic Acid Dropping Test, and the paint shall be as specified in 7.4.2(c).

7.4.4 An annealed zinc coating that is bent or similarly formed after annealing shall additionally be painted in the bent or formed area when the bending or forming process damages the zinc coating.

7.4.5 When flaking or cracking of the zinc coating at the outside radius of the bent or formed section is visible at 25 power magnification, the zinc coating is considered damaged. Simple sheared or cut edges and punched holes are not considered to be formed, but extruded and rolled edges and holes shall conform with 7.4.4.

UL COPYRIGHTED MATERIAL –
NOT AUTHORIZED FOR FURTHER REPRODUCTION OR
DISTRIBUTION WITHOUT PERMISSION FROM UL

Documents
Document Sharing Hub

Copyright UL
Provided by IHS under license with UL
No reproduction or networking permitted without license from IHS
Full document details: UL 427 2013

Licensee=North Carolina State Univ/5618801100
Not for Resale, 07/06/2013 19:12:45 MDT

7.4.6 With reference to 7.4.1, other finishes, including paints, special metallic finishes, and combinations of the two, may be accepted when comparative tests with galvanized-sheet steel without annealing, wiping, or other surface treatment conforming with 7.4.2(a) or 7.4.3(a), as applicable, indicate they provide equivalent protection. Among the factors that are taken into consideration when judging the acceptability of such coating systems are exposure to salt spray, moist carbon dioxide-sulfur dioxide air mixtures, moist hydrogen sulphide air mixtures, ultraviolet light, and water.

7.4.7 Nonferrous enclosures may be employed without special corrosion protection. See 7.1.2.

7.4.8 Gaskets required to seal electrical enclosures against the entrance of rain and condensate shall be held in place by mechanical fasteners or adhesives, except as indicated in 7.4.9, and shall comply with the requirements of 59.1.1 – 59.1.5. Sealing compounds required to seal electrical enclosures shall comply with the requirements of 59.2.1. Adhesives required to secure gaskets shall comply with the requirements of 59.3.1. Gaskets shall be neoprene, rubber, or thermoplastic. Other materials may be used when they have equivalent properties.

7.4.9 Gaskets that are prevented from displacement either by their location or placement of other components in the enclosure when the cover is removed and that would be reengaged in the intended manner when the cover is replaced are not required to be held by mechanical fasteners or adhesives. Consideration shall be given to the intended mounting of the gasket in the application.

8 Field-Supply Connections

8.1 Permanently connected equipment

8.1.1 As used in this section, field-wiring terminals are considered to be the terminals to which power supply, control, or equipment grounding connections will be made in the field when the product is installed.

8.1.2 A product shall have provision for connection of one of the wiring systems that, in accordance with the National Electrical Code, NFPA 70, would be acceptable for it.

8.1.3 The product shall be provided with field-wiring terminals or leads for the connection of conductors having an ampacity of not less than that indicated in 66.8. Branch circuit conductors rated 60°C (140°F) shall be used when the required circuit ampacity is 100 amperes or less and conductors rated 75°C (167°F) shall be used when the required ampacity is more than 100 amperes.

8.1.4 A field-wiring terminal shall be prevented from turning or shifting in position by means other than friction between surfaces. This is to be accomplished by two screws or rivets; by square shoulders or mortices; by a dowel pin, lug, or offset; by a connecting strap or clip fitted into an adjacent part; or by some other equivalent method.

8.1.5 For 8 AWG (8.4 mm^2) and larger conductors, pressure wire connectors shall be used. For 10 AWG (5.3 mm^2) and smaller conductors, the parts to which wiring connections are made may consist of clamps or wire binding screws with cupped washers, terminal plates, or the equivalent to hold the wire in position.

8.1.6 A wire binding screw shall thread into metal.

UL COPYRIGHTED MATERIAL –
NOT AUTHORIZED FOR FURTHER REPRODUCTION OR
DISTRIBUTION WITHOUT PERMISSION FROM UL

Documents
Document Sharing Hub

Copyright UL
Provided by IHS under license with UL
No reproduction or networking permitted without license from IHS
Full document details: UL 427 2013

Licensee=North Carolina State Univ/5618801100
Not for Resale, 07/06/2013 19:12:45 MDT

8.1.7 A wire binding screw at a field-wiring terminal shall not be smaller than No. 8 (4.2 mm diameter), except that a No. 6 (3.5 mm diameter) screw may be used for the connection of one 14, 16, or 18 AWG (2.1, 1.3, or 0.82 mm^2) conductor.

8.1.8 It should be noted that according to the National Electrical Code, NFPA 70, 14 AWG (2.1 mm^2) is the smallest conductor which may be used for branch circuit wiring and thus is the smallest conductor that may be anticipated at a terminal for the connection of a power supply wire.

8.1.9 A terminal plate for a wire binding screw shall be of metal not less than 0.030 inch (0.762 mm) thick for a 14 AWG (2.1 mm^2) or smaller wire and not less than 0.050 inch (1.27 mm) thick for a wire larger than 14 AWG; and in either case, there shall be not less than two full threads in the metal.

8.1.10 A terminal plate formed from stock having the required thickness, see 8.1.9, may have the metal extruded at the tapped hole for the binding screw to provide two full threads, provided that two full threads results in a connection in which the threads will not strip with normal tightening torque in accordance with the values indicated in the requirements for the Standard for Wire Connectors, UL 486A-486B.

8.1.11 Upturned lugs or a cupped washer shall be capable of retaining a conductor of the size mentioned in 8.1.3 and 66.8, but no smaller than 14 AWG (2.1 mm^2), under the head of the screw or the washer.

8.1.12 A field-wiring terminal intended for the connection of a grounded conductor shall be of a metal or plated with a metal substantially white in color and shall be readily distinguishable from the other terminals, or proper identification of that terminal shall be shown in some other manner, such as on an attached wiring diagram. A lead intended for the connection of a grounded conductor shall be finished to show a white or gray color, shall be distinguishable from other leads, and no other lead shall be so identified.

8.2 Field wiring compartment

8.2.1 A knockout, hole, or threaded bushing for connection of a field-wiring system to a field-wiring compartment shall accommodate conduit of the trade size determined by Table 8.1.

8.2.2 Space shall be provided in the field-wiring compartment or outlet box for installation of conductors of the number and size required by 8.1.3 using Type TW or THW wire when at least a 6 inch (150 mm) length of each conductor is brought into the wiring compartment. When required, a trial installation is to be made.

Exception: Conductors other than Type TW or THW may be used when specified in the installation instructions.

8.2.3 The location of a terminal box or compartment in which power supply connections are to be made shall be such that these connections may be inspected after the product is installed. The connections shall be accessible without removing parts other than a service cover or panel and the cover of the outlet box or compartment in which the connections are made.

UL COPYRIGHTED MATERIAL –
NOT AUTHORIZED FOR FURTHER REPRODUCTION OR
DISTRIBUTION WITHOUT PERMISSION FROM UL

Documents
Document Sharing Hub

Copyright UL
Provided by IHS under license with UL
No reproduction or networking permitted without license from IHS
Full document details: UL 427 2013

Licensee=North Carolina State Univ/5618801100
Not for Resale, 07/06/2013 19:12:45 MDT

Table 8.1
Trade size of conduit in inches

Wire size,		Number of wires				
AWG	(mm^2)	2	3	4	5	6
14	2.1	1/2	1/2	1/2	1/2	1/2
12	3.3	1/2	1/2	1/2	3/4	3/4
10	5.3	1/2	1/2	1/2	3/4	3/4
8	8.4	3/4	3/4	1	1	1-1/4
6	13.3	3/4	1	1	1-1/4	1-1/4
4	21.2	1	1	1-1/4	1-1/4	1-1/2
3	26.7	1	1-1/4	1-1/4	1-1/2	1-1/2
2	33.6	1	1-1/4	1-1/4	1-1/2	2
1	42.4	1-1/4	1-1/4	1-1/2	2	2

NOTES

1 This table is based on the assumption that all conductors will be of the same size and there will be no more than six conductors in the conduit. When more than six conductors will be involved or when all of them are not of the same size, the internal cross sectional area of the smallest conduit that may be used is determined by multiplying by 2.5 the total cross-sectional area of the wires, based on the cross-sectional area of Type THW wire.

2 One inch equals 25.4 mm.

8.2.4 A terminal compartment intended for the connection of a supply raceway shall be secured in position and shall be prevented from turning.

8.2.5 The length of a lead inside an outlet box or wiring compartment shall be 6 inches (152 mm) or more when the lead is intended for field connection to an external circuit. The lead may be less than 6 inches long when it is evident that the use of a longer lead might result in damage to the lead insulation.

8.2.6 Leads intended for connection to field-installed conductors shall be provided with strain relief when stress on the lead may be transmitted to terminals, splices, or internal wiring. See Strain Relief Test, Section 46.

8.2.7 Leads provided for spliced connections to an external high-voltage circuit shall not be connected to wire binding screws or pressure wire connectors located in the same compartment as the splice unless the screws or connectors are rendered unusable for field-wiring connections or the leads are insulated at the unconnected ends.

UL COPYRIGHTED MATERIAL –
NOT AUTHORIZED FOR FURTHER REPRODUCTION OR
DISTRIBUTION WITHOUT PERMISSION FROM UL

Documents
Document Sharing Hub

Copyright UL
Provided by IHS under license with UL
No reproduction or networking permitted without license from IHS
Full document details: UL 427 2013

Licensee=North Carolina State Univ/5618801100
Not for Resale, 07/06/2013 19:12:45 MDT

8.3 Cord-connected units

8.3.1 A refrigerating unit intended for cord connection to the power supply shall be provided with:

a) A flexible cord of a type, length, and ampacity and an attachment plug of a type and rating complying with the requirements of 8.3.2 – 8.3.8; or

b) An appliance inlet for connection of a detachable power supply and either a detachable power supply cord or instructions for selection of a suitable detachable power supply cord.

8.3.2 A cordset or power supply cord shall comply with the Standard for Cord Sets and Power Supply Cords, UL 817.

8.3.3 The marked rating of a cord-connected refrigerating unit, see 67.1, shall not exceed 80 percent of the rating of the attachment plug.

8.3.4 A cord-connected refrigerating unit shall employ a grounding-type attachment plug that complies with the Standard for Wiring Devices-Dimensional Requirements, ANSI/NEMA WD6. See Table 8.2 for typical plugs used.

Exception: Refrigerators rated 250 volts or less and intended for connection to circuits rated other than 60 hertz, or other than the voltages specified in the first column of Table 35.1, or both, may employ a grounding-type attachment plug acceptable for the circuit involved.

Table 8.2
Attachment plugs

Nameplate rating			Attachment plug	
Volts	Phase	Amperes[a]	Rating	ANSI designation[b]
110 – 120	1	12.0	15 amperes, 125 volts	5 – 15P
110 – 120	1	16.0	20 amperes, 125 volts	5 – 20P
110 – 120	1	24.0	30 amperes, 125 volts	5 – 30P
110 – 120	1	40.0	50 amperes, 125 volts	5 – 50P
200 – 240	1	12.0	15 amperes, 250 volts	6 – 15P
200 – 240	1	16.0	20 amperes, 250 volts	6 – 20P
200 – 240	1	24.0	30 amperes, 250 volts	6 – 30P
200 – 240	1	40.0	50 amperes, 250 volts	6 – 50P
110 – 120/200 – 240	1	12.0	15 amperes, 125/250 volts	14 – 15P
110 – 120/200 – 240	1	16.0	20 amperes, 125/250 volts	14 – 20P
110 – 120/200 – 240	1	24.0	30 amperes, 125/250 volts	14 – 30P
110 – 120/200 – 240	1	40.0	50 amperes, 125/250 volts	14 – 50P
200 – 240	3	12.0	15 amperes, 250 volts	15 – 15P
200 – 240	3	16.0	20 amperes, 250 volts	15 – 20P
200 – 240	3	24.0	30 amperes, 250 volts	15 – 30P
200 – 240	3	40.0	50 amperes, 250 volts	15 – 50P

[a] The ampere rating is the maximum permitted to be marked on the refrigerator nameplate for the attachment plug indicated. See 8.3.3.
[b] Standard for Wiring Devices – Dimensional Requirements, ANSI/NEMA WD6.

UL COPYRIGHTED MATERIAL –
NOT AUTHORIZED FOR FURTHER REPRODUCTION OR
DISTRIBUTION WITHOUT PERMISSION FROM UL
Documents
Document Sharing Hub

Copyright UL
Provided by IHS under license with UL
No reproduction or networking permitted without license from IHS
Full document details: UL 427 2013
Licensee=North Carolina State Univ/5618801100
Not for Resale, 07/06/2013 19:12:45 MDT

8.3.5 A cord-connected refrigerating unit may employ Type S, SE, SO, SOO, ST, STO, STOO, SJ, SJE, SJO, SJOO, SJT, SJTO, or SJTOO power supply cord rated for use at a voltage not less than the rated voltage of the refrigerator. The ampacity of the cord as given in the National Electrical Code, ANSI/NFPA 70, shall be not less than that required by the ampere input measured in the Temperature and Pressure Test, Section 39, or the Defrost Test, Section 40. The ampere input value shall include the loads for convenience outlets and the current drawn by accessories intended for use with the refrigerating unit.

8.3.6 The ampacity of a power supply cord on a refrigerating unit intended for connection to a branch circuit which exceeds the limitations specified in the Exception to 19.4.2 shall be not less than 80 percent of the maximum continuous current of the motor-compressor determined in accordance with Maximum Continuous Current Test, Section 54, plus the sum of all other loads, including accessories, which may operate concurrently.

Exception: The ampacity of the power supply cord is not required to be greater than the ampere rating of the attachment plug.

8.3.7 A power supply cord for an outdoor use refrigerating unit shall be one of the types specified in 8.3.5 and recognized for outdoor use. Such cords are identified by the letters “W” or “W-A” following the cord type designation marked on the jacket. A cord that is marked “Outdoor” in addition to the letters “W” or “W-A” shall be used only on refrigerating units that have been found acceptable for outdoor use.

8.3.8 The length of a power supply cord shall be not less than 6 feet (1.8 m) nor more than 10 feet (3.0 m). The length is to be measured between the attachment plug and:

a) Any point at which the cord exits the refrigerating unit cabinet, or

b) The last strain relief, whichever is shorter.

Exception: The power supply cord may be less than 6.0 feet (1.8 m), but not less than 1.5 feet (0.45 m) long when the refrigerating unit is intended to be plugged into a dedicated outlet provided on the equipment intended to be refrigerated, such as a walk-in cooler or vending machine.

8.3.9 The power supply cord shall be provided with strain relief means so that a stress on the cord is not transmitted to terminals, splices, or internal wiring. See Strain Relief Test, Section 46. A metallic strain relief shall not contact uninsulated live parts or reduce spacings within the enclosure when the cord is moved inward. The cord shall not be subject to damage by moving parts when it can be moved inward.

8.3.10 The edges of the entry hole for the power supply cord, including the cord entry hole in a bushing, shall be smooth and rounded without burrs, fins, or sharp edges that might damage the cord insulation. The power supply cord shall be routed to prevent damage to the cord insulation.

UL COPYRIGHTED MATERIAL –
NOT AUTHORIZED FOR FURTHER REPRODUCTION OR
DISTRIBUTION WITHOUT PERMISSION FROM UL

Documents
Document Sharing Hub

Copyright UL
Provided by IHS under license with UL
No reproduction or networking permitted without license from IHS
Full document details: UL 427 2013

Licensee=North Carolina State Univ/5618801100
Not for Resale, 07/06/2013 19:12:45 MDT

8.4 Grounding

8.4.1 A refrigerating unit shall have provision for grounding as follows:

a) For a permanently connected refrigerating unit, there shall be an equipment grounding terminal or lead.

b) For a cord-connected refrigerating unit, there shall be an equipment grounding conductor in the power supply cord terminating in an identified grounding terminal as specified in 8.4.2.

8.4.2 On a cord connected refrigerating unit, the grounding conductor of the flexible cord shall be finished with a continuous green color or with a continuous green color with one or more yellow stripes, and no other conductor shall be so identified. The grounding conductor shall be secured to the frame or enclosure of the refrigerator by a positive means, see 11.5, that is not likely to be removed during any servicing operation not involving the power supply cord. The grounding conductor shall be connected to the grounding blade of the attachment plug.

8.4.3 On a permanently connected refrigerating unit, a terminal intended solely for connection of an equipment grounding conductor shall be capable of securing a conductor of the size required by the National Electrical Code, ANSI/NFPA 70.

8.4.4 A soldering lug, a push-in connector, a screwless connector, or a quick connect or similar friction fit connector shall not be used for the grounding terminal.

Exception: An internal connection for bonding internal parts of the enclosure for grounding, but not for a field-installed grounding conductor or for the grounding wire in a power supply cord, may employ a quick connect terminal of the specified dimensions, when:

a) The connector is not likely to be displaced; and

b) The component is limited to use on a circuit having a branch circuit protective device rated as shown in Table 8.3.

Table 8.3
Internal terminal connections for bonding

Terminal dimensions, inches (mm)	Rating of protective device, amperes
0.020 by 0.187 by 0.250 (0.51 by 4.75 by 6.4)	20 or less
0.032 by 0.187 by 0.250 (0.81 by 4.75 by 6.4)	20 or less
0.032 by 0.205 by 0.250 (0.81 by 5.2 by 6.4)	20 or less
0.032 by 0.250 by 0.312 (0.81 by 6.4 by 7.9)	60 or less

8.4.5 On permanently connected refrigerating units, a wire binding screw intended for the connection of an equipment grounding conductor shall have a green-colored head that is hexagonal, slotted, or both. Except as indicated in 8.4.6, a pressure wire connector intended for connection of such a conductor shall be plainly identified such as by being marked “G,” “GR,” “GROUND,” or “GROUNDING,” or by a marking on a wiring diagram provided on the refrigerating unit. The wire binding screw or pressure wire connector shall be secured to the frame or enclosure of the refrigerating unit and shall be located so that it is unlikely to be removed during service operations, such as replacing fuses, resetting manual-reset devices, or oiling motors.

UL COPYRIGHTED MATERIAL –
NOT AUTHORIZED FOR FURTHER REPRODUCTION OR
DISTRIBUTION WITHOUT PERMISSION FROM UL
Documents
Document Sharing Hub
Copyright UL
Provided by IHS under license with UL
No reproduction or networking permitted without license from IHS
Licensee=North Carolina State Univ/5618801100
Not for Resale, 07/06/2013 19:12:45 MDT
Full document details: UL 427 2013

8.4.6 When a pressure wire connector intended for grounding is located where it could be mistaken for the neutral conductor of a grounded supply, it shall be identified by a marking “EQUIPMENT GROUND,” by a green color identification, or by both.

8.4.7 On a permanently connected refrigerating unit, the surface of an insulated lead intended solely for the connection of an equipment grounding conductor shall be finished in a continuous green color or a continuous green color with one or more yellow stripes, and no other lead shall be so identified.

9 Internal Wiring and Wiring Methods

9.1 General

9.1.1 Wiring shall have insulation for the potential involved and the temperatures to which it may be subjected. Compliance is to be determined on the basis of the temperatures measured during the applicable temperature tests specified in the Temperature and Pressure Test, Section 39, and Defrost Test, Section 40.

Exception: If it can be determined that the wiring will not be exposed to heat from radiating sources or heated components, and if the ampacity of the conductors is in accordance with Table 9.1, the temperature tests on the wiring may be waived.

9.1.2 With reference to the Exception to 9.1.1, high-voltage circuit conductors supplying one motor shall have an ampacity not less than 125 percent of the motor full load current rating. Conductors supplying more than one motor shall have an ampacity not less than 125 percent of the full load current rating of the largest motor plus the full load current rating of any other motors supplied. Conductors supplying a motor load and other loads shall have an ampacity not less than 125 percent of the motor full load current rating plus the marked current ratings or measured inputs of the additional loads supplied.

9.1.3 Wiring that is color-coded green or green with one or more yellow stripes shall be used only for grounding conductors. Wiring used for other purposes shall not be identified with the color codes mentioned in the previous sentence.

Table 9.1
Wiring materials ampacities

Wire size		
mm^2	**AWG**	**Ampacity**
0.41	22	4
0.66	20	7
0.82	18	10
1.3	16	13
2.1	14	18
3.3	12	25
5.3	10	30
8.4	8	40
13.3	6	55
21.2	4	70
33.6	2	95
42.4	1	110

UL COPYRIGHTED MATERIAL –
NOT AUTHORIZED FOR FURTHER REPRODUCTION OR
DISTRIBUTION WITHOUT PERMISSION FROM UL

Table 9.1 Continued on Next Page

Documents
Document Sharing Hub

Copyright UL
Provided by IHS under license with UL
No reproduction or networking permitted without license from IHS
Full document details: UL 427 2013

Licensee=North Carolina State Univ/5618801100
Not for Resale, 07/06/2013 19:12:45 MDT

Table 9.1 Continued

Wire size		
mm^2	AWG	Ampacity
NOTE – The ampacities shown apply to appliance wiring materials. For types of wires other than appliance wiring materials, the ampacity shall be determined from Table 310-16 and 310-17 in the National Electric Code, ANSI/NFPA 70, for the type of wire employed. The correction factors of the referenced tables need not be applied.		

9.2 High voltage circuits

9.2.1 Internal Wiring shall comply with the Standard for Thermoplastic-Insulated Wires and Cables, UL 83; the Standard for Thermoset-Insulated Wires and Cables, UL 44; the Standard for Appliance Wiring Material, UL 758; or the Standard for Flexible Cords and Cables, UL 62.

9.2.2 Wiring material shall be suitably enclosed so as to reduce the risk of damage to the wiring, or emission of flame or molten metal through openings in the cabinet. The wiring is considered suitably enclosed when all of the following conditions are met:

a) Where practicable, individual leads are bunched together to form a cable;

b) Wiring is secured to fixed panels or other surfaces at intervals to assure proper routing and to reduce the likelihood of hooking of slack during routine service, such as replacing air filters, operating reset mechanisms, oiling motors, replacing fuses, adjusting the settings of controls, or the like;

c) Wiring is located in a compartment which is provided with a complete base pan or similar bottom enclosure;

d) Wiring cannot be contacted through openings in the outer enclosure or cabinet by the probe illustrated in Figure 7.3; and

e) Wiring is not located in a compartment where plumbing connections are made at the point of installation.

9.2.3 Cords or appliance wiring material of a type indicated in Table 9.2 need not be enclosed as indicated in 9.2.2 if the wiring is:

a) Arranged so that burning insulation or molten material will not fall onto flammable material within or under the enclosure, and

b) Cord type indicated in 8.3.5 or protected from physical damage by baffles, barriers, or the like so that the wiring cannot be contacted by a 1/2 inch (12.7 mm) diameter rod inserted vertically downward into the wiring compartment.

UL COPYRIGHTED MATERIAL –
NOT AUTHORIZED FOR FURTHER REPRODUCTION OR
DISTRIBUTION WITHOUT PERMISSION FROM UL

Documents
Document Sharing Hub

Copyright UL
Provided by IHS under license with UL
No reproduction or networking permitted without license from IHS
Full document details: UL 427 2013

Licensee=North Carolina State Univ/5618801100
Not for Resale, 07/06/2013 19:12:45 MDT

Table 9.2
Wiring

Type of wire, cord, or cable	Wire size		Insulation thickness	
	AWG	(mm^2)	inch	(mm)
Appliance wiring material having thermoplastic or neoprene insulation, with insulation thicknesses shown at right corresponding to the wire sizes indicated; or cord Type S, SE, SO, SOO, ST, STO, STOO; SJ, SJE, SJO, SJOO, SJT, SJTO, SJTOO, SP-3, SPE-3, SPT-3	18	(0.82)	4/64	(1.6)
	16	(1.3)	4/64	(1.6)
	14	(2.1)	5/64	(2.0)
	12	(3.3)	5/64	(2.0)
	10	(5.3)	5/64	(2.0)
	8	(8.4)	6/64	(2.4)
	6	(13.3)	8/64	(3.2)
	4	(21.2)	9/64	(3.6)
	2	(33.6)	10/64	(4.0)

9.2.4 Parallel conductor appliance wiring material of the integral type shall not be ripped more than 3 inches (76.2 mm) unless the thickness of conductor insulation after ripping is at least 0.058 inch (1.47 mm). If the material has conductor insulation not less than 0.028 inch (0.71 mm) after ripping and is within a separate metal enclosure, conduit, electrical metallic tubing, or metal raceway, the length of rip is not limited.

9.2.5 Thermoplastic-insulated high voltage wiring materials that have an insulation thickness of 1/32 inch (0.8 mm) nominal for sizes 16 and 18 AWG, and 3/64 inch (1.2 mm) for sizes 14, 12, 10, and 8 AWG, are considered to be equivalent to the wiring materials referenced in Table 9.2 when the conductors are covered with thermoplastic insulating tubing that has a wall thickness of 2/64 inch (0.8 mm) and is of a type rated for the purpose from the standpoint of electrical, mechanical, and flammability properties.

9.2.6 Resistance-type heater wire employed to prevent condensation is considered in compliance with 9.1.1 if the insulation is rated 80°C (176°F) or higher, the input is less than 2.5 watts per foot (8.3 W/m), and adjacent heater wires are maintained not less than 3/4 inch (19.1 mm) apart and in contact with a metal, phenolic, or other radiating panel.

9.2.7 Where cords or appliance wiring material are employed in the user accessible refrigerated compartment, such wiring shall be of a type as indicated in Table 9.2 and shall be located or protected so as not to be damaged by product containers, removable shelves, or similar parts.

UL COPYRIGHTED MATERIAL –
NOT AUTHORIZED FOR FURTHER REPRODUCTION OR
DISTRIBUTION WITHOUT PERMISSION FROM UL

Documents
Document Sharing Hub

Copyright UL
Provided by IHS under license with UL
No reproduction or networking permitted without license from IHS
Full document details: UL 427 2013

Licensee=North Carolina State Univ/5618801100
Not for Resale, 07/06/2013 19:12:45 MDT