UL 441

STANDARD FOR SAFETY

Gas Vents

UL COPYRIGHTED MATERIAL –
NOT AUTHORIZED FOR FURTHER REPRODUCTION OR
DISTRIBUTION WITHOUT PERMISSION FROM UL

Documents
Document Sharing Hub

Full document details: UL 441 2016

Copyrighted material licensed to Copyrighted material licensed to by Thomson Scientific, Inc. (www.techstreet.com). This copy downloaded on 2016-08-23 08:18:31 -0500 by authorized user User. No

Copyrighted material licensed to Copyrighted material licensed to by Thomson Scientific, Inc. (www.techstreet.com). This copy downloaded on 2016-08-23 08:18:31 -0500 by authorized user User. No

This document is only permissible for use by User of . 8/23/2016 1:17:39 PM

UL COPYRIGHTED MATERIAL –
NOT AUTHORIZED FOR FURTHER REPRODUCTION OR
DISTRIBUTION WITHOUT PERMISSION FROM UL

Documents
Document Sharing Hub

UL Standard for Safety for Gas Vents, UL 441

Eleventh Edition, Dated April 8, 2016

Summary of Topics

This revision to ANSI/UL 441 includes updates to obsolete code references. The revisions also address other miscellaneous universal upkeep of UL for Standards Safety. These revisions are considered to be non-substantive and not subject to UL's STP process.

Text that has been changed in any manner or impacted by UL's electronic publishing system is marked with a vertical line in the margin.

All rights reserved. No part of this publication may be reproduced, stored in a retrieval system, or transmitted in any form by any means, electronic, mechanical photocopying, recording, or otherwise without prior permission of UL.

UL provides this Standard ″as is″ without warranty of any kind, either expressed or implied, including but not limited to, the implied warranties of merchantability or fitness for any purpose.

In no event will UL be liable for any special, incidental, consequential, indirect or similar damages, including loss of profits, lost savings, loss of data, or any other damages arising out of the use of or the inability to use this Standard, even if UL or an authorized UL representative has been advised of the possibility of such damage. In no event shall UL's liability for any damage ever exceed the price paid for this Standard, regardless of the form of the claim.

Users of the electronic versions of UL's Standards for Safety agree to defend, indemnify, and hold UL harmless from and against any loss, expense, liability, damage, claim, or judgment (including reasonable attorney's fees) resulting from any error or deviation introduced while purchaser is storing an electronic Standard on the purchaser's computer system.

This document is only permissible for use by User of . 8/23/2016 1:17:39 PM

Copyrighted material licensed to Copyrighted material licensed to by Thomson Scientific, Inc. (www.techstreet.com). This copy downloaded on 2016-08-23 08:18:31 -0500 by authorized user User. No

UL COPYRIGHTED MATERIAL –
NOT AUTHORIZED FOR FURTHER REPRODUCTION OR
DISTRIBUTION WITHOUT PERMISSION FROM UL

Documents
Document Sharing Hub

Full document details: UL 441 2016

No Text on This Page

This document is only permissible for use by User of . 8/23/2016 1:17:39 PM

Copyrighted material licensed to Copyrighted material licensed to by Thomson Scientific, Inc. (www.techstreet.com). This copy downloaded on 2016-08-23 08:18:31 -0500 by authorized user User. No

UL COPYRIGHTED MATERIAL –
NOT AUTHORIZED FOR FURTHER REPRODUCTION OR
DISTRIBUTION WITHOUT PERMISSION FROM UL

Documents
Document Sharing Hub

Full document details: UL 441 2016

APRIL 8, 2016
(Title Page Reprinted: July 27, 2016)

ANSI/UL 441-2006 (R2014)

UL 441

Standard for Gas Vents

First Edition – September, 1958
Second Edition – January, 1969
Third Edition – January, 1971
Fourth Edition – July, 1973
Fifth Edition – July, 1979
Sixth Edition – March, 1986
Seventh Edition – September, 1991
Eighth Edition – October, 1994
Ninth Edition – January, 1996
Tenth Edition – March, 2010

Eleventh Edition

April 8, 2016

This ANSI/UL Standard for Safety consists of the Eleventh Edition and covers the revisions through July 27, 2016.

The most recent designation of UL 441 as a Reaffirmed American National Standard (ANS) occurred on June 12, 2014. ANSI approval for a standard does not include the Cover Page, Transmittal Pages and Title Page.

The Department of Defense (DoD) has adopted UL 441 on September 16, 1991. The publication of revised pages or a new edition of this Standard will not invalidate the DoD adoption.

Comments or proposals for revisions on any part of the Standard may be submitted to UL at any time. Proposals should be submitted via a Proposal Request in UL's On-Line Collaborative Standards Development System (CSDS) at http://csds.ul.com.

UL's Standards for Safety are copyrighted by UL. Neither a printed nor electronic copy of a Standard should be altered in any way. All of UL's Standards and all copyrights, ownerships, and rights regarding those Standards shall remain the sole and exclusive property of UL.

COPYRIGHT © 2016 UNDERWRITERS LABORATORIES INC.

UL COPYRIGHTED MATERIAL –
NOT AUTHORIZED FOR FURTHER REPRODUCTION OR
DISTRIBUTION WITHOUT PERMISSION FROM UL

Documents
Document Sharing Hub

This document is only permissible for use by User of . 8/23/2016 1:17:39 PM

Copyrighted material licensed to Copyrighted material licensed to by Thomson Scientific, Inc. (www.techstreet.com). This copy downloaded on 2016-08-23 08:18:31 -0500 by authorized user User. No

Full document details: UL 441 2016

No Text on This Page

This document is only permissible for use by User of . 8/23/2016 1:17:39 PM

Copyrighted material licensed to Copyrighted material licensed to by Thomson Scientific, Inc. (www.techstreet.com). This copy downloaded on 2016-08-23 08:18:31 -0500 by authorized user User. No

UL COPYRIGHTED MATERIAL –
NOT AUTHORIZED FOR FURTHER REPRODUCTION OR
DISTRIBUTION WITHOUT PERMISSION FROM UL

Documents
Document Sharing Hub

Full document details: UL 441 2016

CONTENTS

INTRODUCTION

1 Scope 5
2 Components 5
3 Units of Measurement 6
4 Undated References 6
5 Glossary 6

CONSTRUCTION

6 Materials 7
7 Assembly 9
8 Caps 11
9 Firestops 11
10 Spacers 11
11 Joints 12
12 Radiation Shields 12
13 Roof Assemblies 13
14 Roof Jacks 13
15 Fittings 13
16 Sizes 13
17 Support Assembly 14

PERFORMANCE

18 General 14
19 Test Installation 15
19.1 General 15
19.2 Type B vents – Form I test structure 26
19.3 Type B vents – Form II test structure 26
19.4 Type BW vents – Form III test structure 27
19.5 Type B Gas vent roof jacks – Forms IV and V test structures 27
19.6 Type BW gas vent roof jacks – Form VI test structure 28
20 Temperature Measurement 28
21 Temperature Test – Structures 33
21.1 General 33
21.2 Test type BW gas vent or roof jack test structure Forms III and VI 35
22 Temperature Test – Gas-Vent Pipe Surfaces 35
23 Draft Loss and Wind Effects Test 36
24 Vertical Support Test 37
25 Strength Test 37
25.1 General 37
25.2 Impact test 38
25.3 Longitudinal force test 40
26 Wind Load Test 40
27 Rain Test 42
28 Crushing Test of Nonmetallic Flue-Gas Conduit 45
29 Resistance to Action of Acids Test of Nonmetallic Flue-Gas Conduit 46
30 Freezing and Thawing Test of Water-Absorptive Nonmetallic Materials 46
31 Cemented Joint Test of Flue-Gas Conduit 47

UL COPYRIGHTED MATERIAL –
NOT AUTHORIZED FOR FURTHER REPRODUCTION OR
DISTRIBUTION WITHOUT PERMISSION FROM UL

Documents
Document Sharing Hub

This document is only permissible for use by User of . 8/23/2016 1:17:39 PM

Copyrighted material licensed to Copyrighted material licensed to by Thomson Scientific, Inc. (www.techstreet.com). This copy downloaded on 2016-08-23 08:18:31 -0500 by authorized user User. No

Full document details: UL 441 2016

32 Sulfuric Acid Extraction Test for Porcelain-Coated Steel Used for Flue-Gas Conduit 47

MARKING

33 General 48

INSTRUCTIONS

34 Installation Instructions 49

This document is only permissible for use by User of . 8/23/2016 1:17:39 PM

Copyrighted material licensed to Copyrighted material licensed to by Thomson Scientific, Inc. (www.techstreet.com). This copy downloaded on 2016-08-23 08:18:31 -0500 by authorized user User. No

UL COPYRIGHTED MATERIAL –
NOT AUTHORIZED FOR FURTHER REPRODUCTION OR
DISTRIBUTION WITHOUT PERMISSION FROM UL

Documents
Document Sharing Hub

Full document details: UL 441 2016

INTRODUCTION

1 Scope

1.1 These requirements cover Types B and BW gas vents and Types B and BW gas vent roof jacks intended for venting gas appliances equipped with draft hoods to burn only gas. Type B vents are also intended for use with other Category I appliances that specify they are for use with Type B gas vents.

1.2 The gas vents covered by these requirements are intended for installation in accordance with the National Fire Protection Association Standards for Chimneys, Fireplaces, Vents, and Solid-Fuel Burning Appliances, NFPA 211 the National Fuel Gas Code, NFPA 54, the Department of Housing and Urban Development Mobile Home Construction and Safety Standards, Chapter II of 24 CFR, Part 280, the International Mechanical Code, and the Uniform Mechanical Code.

2 Components

2.1 Except as indicated in 2.2, a component of a product covered by this standard shall comply with the requirements for that component.

2.2 A component need not comply with a specific requirement that:

a) Involves a feature or characteristic not needed in the application of the component in the product covered by this standard; or

b) Is superseded by a requirement in this standard.

2.3 A component shall be used in accordance with its recognized rating established for the intended conditions of use.

2.4 Specific components are recognized as being incomplete in construction features or restricted in performance capabilities. Such components are intended for use only under limited conditions, such as certain temperatures not exceeding specified limits, and shall be used only under those specific conditions for which they have been recognized.

This document is only permissible for use by User of . 8/23/2016 1:17:39 PM

Copyrighted material licensed to Copyrighted material licensed to by Thomson Scientific, Inc. (www.techstreet.com). This copy downloaded on 2016-08-23 08:18:31 -0500 by authorized user User. No

UL COPYRIGHTED MATERIAL –
NOT AUTHORIZED FOR FURTHER REPRODUCTION OR
DISTRIBUTION WITHOUT PERMISSION FROM UL

Documents
Document Sharing Hub

Full document details: UL 441 2016

3 Units of Measurement

3.1 If a value for measurement is followed by a value in other units in parentheses, the second value may be only approximate. The first stated value is the requirement.

4 Undated References

4.1 Any undated reference to a code or standard appearing in the requirements of this standard shall be interpreted as referring to the latest edition of that code or standard.

5 Glossary

5.1 For the purpose of this standard, the following definitions apply.

5.2 CATEGORY I APPLIANCE – An appliance that operates with a nonpositive vent static pressure and with a vent gas temperature that avoids excessive condensate production in the vent.

5.3 COMBUSTIBLE MATERIAL – Material made of or surfaced with wood, compressed paper, plant fibers, or other material that ignites and burns, as applied to materials adjacent to or in contact with heat-producing appliances, chimney connectors and vent connectors, steam and hot water pipes, and warm air ducts. Such material shall be identified as combustible even though flameproofed, fire-retardant treated, or plastered.

5.4 NONCOMBUSTIBLE MATERIAL – A material that, in the form in which it is used and under the conditions anticipated, does not ignite, burn, support combustion, or release flammable vapors when subjected to fire or heat.

5.5 ROOF JACK – A factory-built assembly for conveying flue gases through a roof and that includes a flue gas passageway, an insulating means, flashing, and a cap.

5.6 TYPE B GAS VENT – A gas vent for venting gas appliances with draft hoods and other Category I gas appliances listed for use with Type B gas vents.

5.7 TYPE BW GAS VENT – A gas vent for venting gas-fired vented wall furnaces.

This document is only permissible for use by User of . 8/23/2016 1:17:39 PM

Copyrighted material licensed to Copyrighted material licensed to by Thomson Scientific, Inc. (www.techstreet.com). This copy downloaded on 2016-08-23 08:18:31 -0500 by authorized user User. No

UL COPYRIGHTED MATERIAL –
NOT AUTHORIZED FOR FURTHER REPRODUCTION OR
DISTRIBUTION WITHOUT PERMISSION FROM UL

Documents
Document Sharing Hub

Full document details: UL 441 2016

CONSTRUCTION

6 Materials

6.1 A gas-vent and a roof-jack part shall be made of noncombustible corrosion-resistant materials. Metals shall not be used in combinations that result in galvanic action at any location within the assembly.

6.2 The minimum thickness of sheet metal, including any coatings, shall be as referenced in Table 6.1 unless otherwise specified.

6.3 Aluminum alloys containing more than 1.0 percent magnesium shall not be used when the reflectivity of the material is utilized to reduce the risk of fire.

6.4 A flue-gas conveying conduit shall be of a material having durability and resistance to corrosion and heat equivalent to that of Type 1100 aluminum, Series 300 or Types 430 and 446 stainless steel, or porcelain-coated steel complying with the requirements contained herein. Except as noted in 6.5, parts in contact with flue gases or flue gas-air mixtures, or subject to condensation, shall be of material having durability and resistance to corrosion and heat equivalent to Type 1100 aluminum or Series 300 or Types 430 and 446 stainless steel.

Table 6.1
Minimum metal thickness

	Inch	(mm)
Aluminum alloys (1100, 3003) – inner pipe	0.012	(0.30)
Aluminum alloys (1100, 3003) – other than inner pipe	0.016	(0.41)
Steel	0.016	(0.41)
Galvanized steel (G90 coating class)	0.018	(0.46)
Aluminum-coated steel (0.40 ounces per square foot)	0.018	(0.46)
Stainless steel (Type 430)	0.012	(0.30)

6.5 An outer casing or other structural part shall be of stainless steel, galvanized steel, or aluminum-coated steel when:

a) Deterioration or corrosion of the part results in the venting system to collapse or otherwise increase the risk of injury to persons;

b) The part adjoins firestopping material; or

c) The part is subject to condensation.

Exception: This requirement does not apply to the flue-gas conveying conduit or other parts in contact with flue-gases or flue-gas air mixtures. See 6.4.

This document is only permissible for use by User of . 8/23/2016 1:17:39 PM

Copyrighted material licensed to Copyrighted material licensed to by Thomson Scientific, Inc. (www.techstreet.com). This copy downloaded on 2016-08-23 08:18:31 -0500 by authorized user User. No

UL COPYRIGHTED MATERIAL –
NOT AUTHORIZED FOR FURTHER REPRODUCTION OR
DISTRIBUTION WITHOUT PERMISSION FROM UL

Documents
Document Sharing Hub

Full document details: UL 441 2016

6.6 Galvanized steel used for outer casings, structural parts, firestopping or other components or subassemblies shall have a zinc-coating complying with the coating designation G90 (former coating class 1.25 commercial) in the Weight (Mass) of Coating Requirements table in the Standard Specification for Steel Sheet, Zinc Coated (Galvanized) or Zinc-Iron Alloy-Coated (Galvannealed) by the Hot Dip Process, ASTM A653/A653M-94, with not less than 40 percent of the zinc on any side, based on the minimum single spot test in the ASTM designation. The weight of zinc coating shall be established in accordance with the Standard Test Method for Weight [Mass] of Coating on Iron and Steel Articles with Zinc or Zinc-Alloy Coatings, ANSI/ASTM A90. Aluminum-coated steel shall be of Type T1-40 (regular) [0.40 ounce per square foot (0.12 kg/m^2)].

6.7 A painted part made of steel not less than 0.053 inch (1.35 mm) thick, or of cast iron not less than 0.125 inch (3.18 mm) thick and for use only in the interior of buildings, has corrosion resistance equivalent to that required by 6.5. Paint coatings shall remain intact at the maximum temperatures obtained on the part during the tests specified in these requirements.

6.8 Except for binder materials, thermal insulation material shall be noncombustible.

6.9 Thermal insulation shall be in accordance with the following conditions when the gas vent or roof jack is tested in accordance with these requirements:

a) The products resulting from the combustion or volatilization of any combustible binder shall be discharged to the vent terminus outside of the building.

b) The insulating material shall remain in its intended position.

c) The thermal conductivity of the insulating material shall not be increased.

d) Thermal insulation shall not show evidence of softening, melting, or other evidence of malfunction or deterioration.

6.10 Thermal insulation shall not come into contact with products of combustion.

6.11 Thermal insulation that is not self-supporting shall be applied to solid surfaces so that the insulation does not sag. An adhesive or cement used to attach such material shall retain its adhesive qualities at any temperature that adhesive attains when tested in accordance with these requirements and at 0°F (minus 18°C).

6.12 A water-absorbing insulating material shall not be subjected to wetting by condensation or rain when installed as intended.

This document is only permissible for use by User of . 8/23/2016 1:17:39 PM

Copyrighted material licensed to Copyrighted material licensed to by Thomson Scientific, Inc. (www.techstreet.com). This copy downloaded on 2016-08-23 08:18:31 -0500 by authorized user User. No

UL COPYRIGHTED MATERIAL –
NOT AUTHORIZED FOR FURTHER REPRODUCTION OR
DISTRIBUTION WITHOUT PERMISSION FROM UL

Documents
Document Sharing Hub

Full document details: UL 441 2016

7 Assembly

7.1 Each part of a gas vent shall be constructed for ready attachment of one to the other without requiring alteration, cutting, threading, drilling, welding, or similar task by the installer.

Exception: A length of gas-vent pipe shall be shortened by cutting when means are provided to permit the shortened length to be coupled to any companion part.

7.2 Two or more parts of a gas vent that bear a definite relationship to each other in the intended application shall:

a) Be arranged and constructed to permit them to be incorporated into the complete assembly without alteration or alignment and only in the correct relationship with each other; or

b) Be assembled and shipped from the factory as one unit.

7.3 Each gas-vent part, such as gas-vent pipe section, an elbow, coupling, or tee, shall be completely assembled by the manufacturer at the factory.

7.4 A Type B or BW gas-vent roof jack shall be completely assembled by the manufacturer at the factory and shall include, in addition to the flue gas carrying conduit, an outer jacket or body and insulating means, a rain cap, and a roof flashing.

Exception No. 1: An adjustable pitch roof flashing for use on a roof with a maximum slope of 3/12 shall not be provided for use on a Type B or BW gas-vent roof jack unless the roof jack outer body incorporates integral mechanical stops to prevent a decrease of clearance from the roof to the lowest flue gas discharge opening as evaluated in test structures Forms IV, V, or VI. See Section 18, Test Installation.

Exception No. 2: An adjustable roof flashing is not required to be an integral part of the roof jack when:

a) The adjustable roof flashing is marked with a specific catalog designation; and

b) The roof jack body is marked to specify that the flashing identified by the catalog designation is required for installation.

7.5 A double wall gas-vent connector for use with Type B gas-vent roof jack shall be packaged separately for field assembly to a gas vent roof jack, when it is marked as required by 33.1.

7.6 A Type B gas vent shall be capable of attachment to appliance flue outlets having diameters of integral inches (25 mm).

7.7 A Type BW gas vent shall be capable of attachment to the gas-vent support and flue collar for vented wall furnaces illustrated by Figure 7.1.

7.8 A Type B gas-vent roof jack shall permit the attachment of a flue pipe having a diameter of integral inches (25 mm) unless it is furnished as part of a complete heating appliance, gas-vent connector, and roof jack assembly. A double wall gas-vent connector for use with a Type B gas vent roof jack shall comply with the requirements as detailed for a gas vent and shall be capable of attachment to the roof jack and to appliance flue outlets having diameters of integral inches (25 mm).

Exception: The test specified in 25.1.2 is not required to be conducted on a double wall gas-vent connector intended for use with a Type B gas vent roof jack.

UL COPYRIGHTED MATERIAL –
NOT AUTHORIZED FOR FURTHER REPRODUCTION OR
DISTRIBUTION WITHOUT PERMISSION FROM UL

Documents
Document Sharing Hub

Full document details: UL 441 2016

This document is only permissible for use by User of . 8/23/2016 1:17:39 PM

Copyrighted material licensed to Copyrighted material licensed to by Thomson Scientific, Inc. (www.techstreet.com). This copy downloaded on 2016-08-23 08:18:31 -0500 by authorized user User. No

Figure 7.1
Standardized details for vent support and flue collar for vented wall furnaces for use with Type BW vents

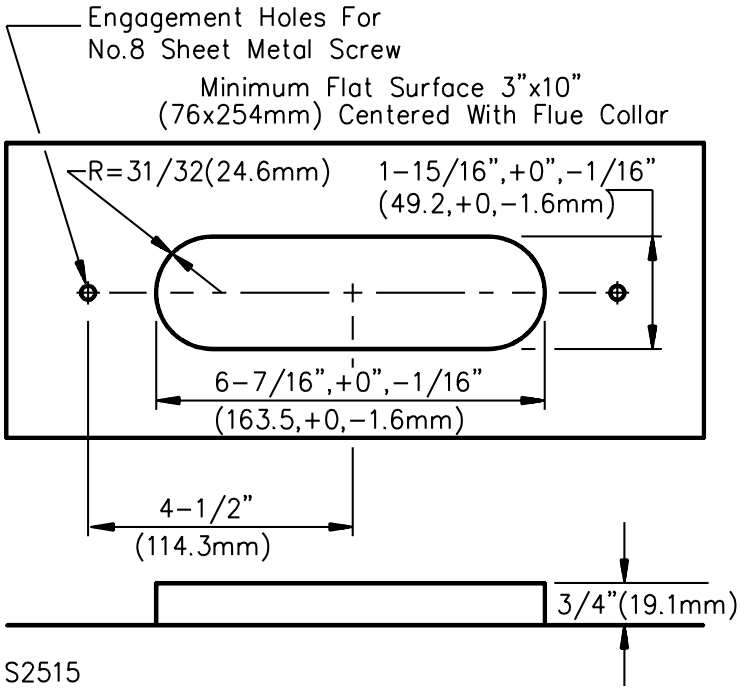

7.9 A Type BW gas-vent roof jack shall be capable of attachment to a Type BW gas-vent pipe section.

7.10 The design of a gas-vent part shall not void the firestopping required between spaces of a building when the part is installed in accordance with the manufacturer's instructions.

7.11 The design of a gas-vent roof jack shall not void the firestopping required for a concealed space when the roof jack is installed in accordance with the manufacturer's instructions.

7.12 The annulus between any two walls of a multiple-wall gas-vent pipe section or gas-vent pipe fitting shall be not less than 1/4 inch (6.4 mm) in width.

This document is only permissible for use by User of . 8/23/2016 1:17:39 PM

Copyrighted material licensed to Copyrighted material licensed to by Thomson Scientific, Inc. (www.techstreet.com). This copy downloaded on 2016-08-23 08:18:31 -0500 by authorized user User. No

UL COPYRIGHTED MATERIAL –
NOT AUTHORIZED FOR FURTHER REPRODUCTION OR
DISTRIBUTION WITHOUT PERMISSION FROM UL

Documents
Document Sharing Hub

Full document details: UL 441 2016

8 Caps

8.1 A cap shall be provided to resist the entrance of debris and rain into the flue-gas conveying conduit and into any cooling-air passage terminating exterior to the building. See Rain Test, Section 27.

8.2 A cap shall be constructed so that leaves and debris falling or blown onto it are not retained so as to obstruct flue-gas or cooling-air passages.

9 Firestops

9.1 Joints between factory-made parts that provide for firestopping shall provide complete firestopping when the assembly is installed in a framed joist opening that is 1/2 inch (13 mm) greater on each side than the opening for which the assembly is intended. A spacer shall provide for continuous interference with construction for a height of not less than 1 inch (25 mm).

9.2 A joint between factory-made parts that provide for firestopping shall have a through opening (total eccentricity) not larger than 1/8 inch (3.2 mm) wide.

10 Spacers

10.1 A Type B and a Type BW gas vent for installation within a 2- by 4-inch (38- by 89-mm) or a 2- by 6-inch (38- by 140-mm) stud space, with other than zero clearance, shall be provided with ceiling plate spacers constructed to locate the gas-vent centrally in the stud space. Each length of pipe for such gas-vents shall include integral spacers that maintain the minimum required clearance between the pipe and the inner surfaces of walls. Such spacers are to be located so that they are directly adjacent to each joint when pipe lengths are joined.

Exception: A base plate in lieu of integral spacers meets the intent of the requirement when used with a Type BW gas vent for single-story installation only.

10.2 A ceiling-plate spacer shall constitute a complete firestop. A ceiling-plate spacer installed at the lowest ceiling level with a Type BW gas vent is not a complete firestop.

10.3 All spacers shall have the strength and bearing surface to maintain the required clearance from gas-vent parts to joists, ceiling and floor material, and the inner surface of walls.

This document is only permissible for use by User of . 8/23/2016 1:17:39 PM

Copyrighted material licensed to Copyrighted material licensed to by Thomson Scientific, Inc. (www.techstreet.com). This copy downloaded on 2016-08-23 08:18:31 -0500 by authorized user User. No

UL COPYRIGHTED MATERIAL –
NOT AUTHORIZED FOR FURTHER REPRODUCTION OR
DISTRIBUTION WITHOUT PERMISSION FROM UL

Documents
Document Sharing Hub

Full document details: UL 441 2016

11 Joints

11.1 Parts of gas vent and roof jacks shall be joined and secured so that they do not disengage when tested in accordance with these requirements.

11.2 When screws are employed to field-joint assemblies, the assemblies to be joined shall provide for use of screws without being field-punched or drilled. When cement is employed for this purpose, the cement shall be a quick-setting type. Cement, screws, and instructions shall be furnished. A screw shall not extend into a flue-gas passage.

11.3 A joint shall not retain condensation or permit condensation to flow from the interior to the exterior of the flue-gas conveying conduit.

12 Radiation Shields

12.1 A radiation shield for a gas vent provided to comply with the maximum temperature limits of the requirement for floor or ceiling structures shall:

a) Be an integral part of a firestop-spacer or support assembly; and

b) Provide a continuous barrier for a vertical distance, referenced to the ceiling or floor level, of not less than 10 inches (250 mm) for gas vents having an internal diameter of 12 inches (300 mm) or less, and not less than 12 inches for all other sizes.

12.2 The assembly referenced in 12.1 shall fit into a framed joist area not larger than the sum of:

a) 1/2 inch (13 mm) greater than the outside diameter of the gas vent; and

b) Twice the dimension to be specified in the installation instructions for clearance between gas-vent pipe sections and combustible enclosures.

12.3 Parts of a firestop-spacer or support assembly that provide incidental shielding from radiation to combustible construction are not radiation shields.

12.4 A radiation shield provided to obtain compliance with the maximum temperature limits of these requirements for roof structures shall not be employed in a roof or other terminating assembly intended to be altered in the field when such alteration requires the shifting or relocation of the shield.

This document is only permissible for use by User of . 8/23/2016 1:17:39 PM

Copyrighted material licensed to Copyrighted material licensed to by Thomson Scientific, Inc. (www.techstreet.com). This copy downloaded on 2016-08-23 08:18:31 -0500 by authorized user User. No

UL COPYRIGHTED MATERIAL –
NOT AUTHORIZED FOR FURTHER REPRODUCTION OR
DISTRIBUTION WITHOUT PERMISSION FROM UL

Documents
Document Sharing Hub

Full document details: UL 441 2016

13 Roof Assemblies

13.1 The height of a roof assembly shall be such that the flue-gas exit is not less than 2 feet (0.61 m) above the roof.

13.2 A roof assembly installed in accordance with the installation instructions shall resist the entrance of excess water and debris into the building at the point where the gas vent passes through the roof. See Rain Test, Section 27.

13.3 A gas-vent roof assembly shall resist the accumulation of soot and debris when such accumulation obstructs flue-gas or cooling-air passages.

14 Roof Jacks

14.1 A roof jack constructed for placement in contact with combustible roof, rafter, insulation, or ceiling material shall provide a continuous surface or barrier for a vertical distance, measured from the roof line, of at least 6 inches (150 mm).

14.2 When installed in accordance with the manufacturer's instructions, a roof jack shall protect against the entrance of excess water and debris into the building where the gas vent passes through the roof. See Rain Test, Section 27.

14.3 A roof jack shall be constructed so that soot or debris shall not accumulate therein when such accumulation obstructs flue-gas or cooling-air passages.

15 Fittings

15.1 The nominal cross-sectional area of the flue-gas passage of a gas-vent pipe fitting shall be equivalent to that of the vent piping with which it is intended to be used.

16 Sizes

16.1 A gas-vent pipe or fitting or a roof jack shall have an internal cross-sectional area of not less than 7-1/16 square inches (45.6 cm^2).

16.2 The internal cross-sectional area of a gas vent pipe or fitting shall be equivalent to a round pipe having an internal diameter of integral inches or in units of 25 mm.

16.3 The internal dimension of the cross section of an oval or rectangular gas-vent pipe or fitting, or of a roof jack, measured across the minor axis, shall be not less than 1-1/2 inches (38 mm).

This document is only permissible for use by User of . 8/23/2016 1:17:39 PM

Copyrighted material licensed to Copyrighted material licensed to by Thomson Scientific, Inc. (www.techstreet.com). This copy downloaded on 2016-08-23 08:18:31 -0500 by authorized user User. No

UL COPYRIGHTED MATERIAL –
NOT AUTHORIZED FOR FURTHER REPRODUCTION OR
DISTRIBUTION WITHOUT PERMISSION FROM UL

Documents
Document Sharing Hub

Full document details: UL 441 2016