UL 48

STANDARD FOR SAFETY

Electric Signs

Documents
Document Sharing Hub

Full document details: UL 48 2022

Documents
Document Sharing Hub

Full document details: UL 48 2022

UL Standard for Safety for Electric Signs, UL 48

Fifteenth Edition, Dated September 2, 2011

Summary of Topics

This revision to ANSI/UL 48 dated April 22, 2022 includes the following changes in requirements:

– Relaxation of section sign markings; 7.7.1

– Components for use in LED signs and changing message signs; 4.4.6.1, 4.3.8.1, 4.3.8.3, 4.3.8.4, 4.3.18.1, 4.3.19.3.1 – 4.3.19.3.3 and Appendix A

Text that has been changed in any manner or impacted by UL's electronic publishing system is marked with a vertical line in the margin.

The new and revised requirements are substantially in accordance with Proposal(s) on this subject dated June 18, 2021 and April 6, 2022.

All rights reserved. No part of this publication may be reproduced, stored in a retrieval system, or transmitted in any form by any means, electronic, mechanical photocopying, recording, or otherwise without prior permission of UL.

UL provides this Standard "as is" without warranty of any kind, either expressed or implied, including but not limited to, the implied warranties of merchantability or fitness for any purpose.

In no event will UL be liable for any special, incidental, consequential, indirect or similar damages, including loss of profits, lost savings, loss of data, or any other damages arising out of the use of or the inability to use this Standard, even if UL or an authorized UL representative has been advised of the possibility of such damage. In no event shall UL's liability for any damage ever exceed the price paid for this Standard, regardless of the form of the claim.

Users of the electronic versions of UL's Standards for Safety agree to defend, indemnify, and hold UL harmless from and against any loss, expense, liability, damage, claim, or judgment (including reasonable attorney's fees) resulting from any error or deviation introduced while purchaser is storing an electronic Standard on the purchaser's computer system.

Documents
Document Sharing Hub

Full document details: UL 48 2022

No Text on This Page

Documents
Document Sharing Hub

Full document details: UL 48 2022

SEPTEMBER 2, 2011
(Title Page Reprinted: April 22, 2022)

ANSI/UL 48-2022

UL 48

Standard for Electric Signs

First Edition – November, 1917
Second Edition – March, 1930
Third Edition – September, 1937
Fourth Edition – March, 1940
Fifth Edition – June, 1954
Sixth Edition – February, 1957
Seventh Edition – December, 1958
Eighth Edition – December, 1960
Ninth Edition – November, 1966
Tenth Edition – October, 1971
Eleventh Edition – June, 1976
Twelfth Edition – November, 1980
Thirteenth Edition – March, 1988
Fourteenth Edition – February, 1996

Fifteenth Edition

September 2, 2011

This ANSI/UL Standard for Safety consists of the Fifteenth Edition including revisions through April 22, 2022.

The most recent designation of ANSI/UL 48 as an American National Standard (ANSI) occurred on April 22, 2022. ANSI approval for a standard does not include the Cover Page, Transmittal Pages, and Title Page.

Comments or proposals for revisions on any part of the Standard may be submitted to UL at any time. Proposals should be submitted via a Proposal Request in UL's On-Line Collaborative Standards Development System (CSDS) at https://csds.ul.com.

UL's Standards for Safety are copyrighted by UL. Neither a printed nor electronic copy of a Standard should be altered in any way. All of UL's Standards and all copyrights, ownerships, and rights regarding those Standards shall remain the sole and exclusive property of UL.

COPYRIGHT © 2022 UNDERWRITERS LABORATORIES INC.

Documents
Document Sharing Hub

Full document details: UL 48 2022

No Text on This Page

Documents
Document Sharing Hub

Full document details: UL 48 2022

CONTENTS

1 Scope 5
2 Glossary 5
3 General 11
3.1 Components 11
3.2 Reference publications 11
3.3 Units of measurement 11
4 Construction 12
4.1 Mechanical 12
4.2 Electrical 25
4.3 Devices and components 50
4.4 Supplementary requirements 60
5 Performance 75
5.1 General 75
5.2 Temperature 75
5.3 Dielectric 79
5.4 Strain relief 79
5.5 Stability 80
5.6 Mounting 80
5.7 Gasket aging 80
5.8 Gasket adhesion 80
5.9 Exclusion of water 81
5.10 Bond impedance 81
5.11 Accessibility barrier dielectric 82
5.12 Glass fragmentation test 82
5.12A Glass impact test 82
5.13 Lamp containment barrier melt-through test 83
5.14 Polymeric ground/bond strength test 83
5.15 Straight accessibility probe test 83
5.16 Mold stress relief distortion test 83
5.17 Torque, bending moment and conduit pullout tests 84
5.18 Conduit knockout and twistout test 84
5.19 Leakage current 85
5.20 Self-threading screw torque test 87
6 Manufacturing and Production Line Testing – Production Line Grounding Continuity 87
7 Marking 87
7.1 General 87
7.2 All signs 88
7.3 Illumination specific 89
7.4 Portable/stationary/mobile 89
7.5 Permanently connected signs 90
7.6 Outline lighting 90
7.7 Section signs 90
7.8 Neon signs for use in dwellings 91
7.9 Photovoltaic signs 91
8 Instructions 91
8.1 General 91
8.2 Section signs 92
8.3 Skeleton neon tubing 92
8.4 Awning signs 92
8.5 Cord-connected 93
8.6 Photovoltaic signs 93

APPENDIX A

Documents
Document Sharing Hub

Full document details: UL 48 2022

Standards for Components 94

Documents
Document Sharing Hub

Full document details: UL 48 2022

1 Scope

1.1 These requirements cover all electric signs, art forms and outline lighting for use in accordance with the National Electrical Code, NFPA 70.

1.2 Electric signs include all signs (regardless of voltage) that are electrically operated and/or electrically illuminated, including but not limited to the following methods of illumination: incandescent, fluorescent, high intensity discharge (HID), electric discharge tubing including neon tubing, light-emitting diode (LED), skeleton neon tubing, cold-cathode lamps, and electroluminescence. Unless otherwise noted the term "sign" includes signs, outline lighting, art forms, and skeleton neon tubing.

1.3 Electric signs covered by these requirements also include, but are not limited to, awning signs, trailer-mounted signs, electrically or mechanically animated signs, signs supplied by photovoltaic systems and other independent power sources, changing message signs, including scrolling, flipper, tri-view, liquid crystal display (LCD), and light-emitting diode (LED) type and other electrically operated signs that are not necessarily illuminated.

1.4 These requirements do not cover the following:

a) Illuminated clocks operating at 600 V or less; refer to the Standard for Household Electric Clocks, UL 826 or for commercial use clocks to the Standard for Time-Indicating and -Recording Appliances, UL 863;

b) Exit signs; refer to the Standard for Emergency Lighting and Power Equipment, UL 924;

c) The trailer of a trailer mounted sign;

d) Luminaires mounted to function as outline lighting; refer to the Standard for Luminaires, UL 1598;

e) Luminaires mounted within an Awning Sign; refer to Standard for Luminaires, UL 1598;

f) Signs that do not use electricity;

g) Luminaires intended for billboard illumination; refer to Standard for Luminaires, UL 1598;

h) Fiber optics or Fiber optic Illuminators;

i) Signs for use in hazardous (classified) locations as defined in the National Electrical Code, NFPA 70.

2 Glossary

2.1 For the purpose of this standard the following definitions apply.

2.2 ACCESSIBILITY BARRIER – A material provided to limit access to the following in items (a) – (d) below. If all or part of the barrier also serves as an enclosure, see Enclosure, 2.21.

a) Uninsulated live parts,

b) Dead metal parts that are at a risk of being energized and are not grounded, and

c) Live parts insulated with materials not intended to be subject to user contact, or

d) Moving parts that present a risk of injury.

2.3 ACCESSIBLE PART – See Part, Accessible, 2.44.

Documents
Document Sharing Hub
Full document details: UL 48 2022

2.4 ADHESIVE – Bonding material (i.e. epoxy, paste, cement) placed between parts to be fastened together that adheres to each part, and remains the securement medium between the parts.

2.5 AWNING SIGN – A fixed structure with flexible or rigid sign face material extending over a window, door, patio, walkway, etc. providing protection from the weather and integral illumination of the signage.

2.6 BARRIER – See Accessibility Barrier, 2.2, Heat Barrier 2.28, Insulating Barrier, 2.31, and Water Shield, 2.76.

2.7 BONDING – Permanent joining of metallic parts to form an electrical conductivity path that provides electrical continuity between dead metal parts and the capacity to conduct any fault current that may occur.

2.8 CANOPY – A device provided with a sign, or separately, that is used to cover an outlet box. A canopy is capable of being secured to an outlet box or to a ceiling.

2.9 CANOPY SIGN – A sign that is supported and suspended from an outlet box by a chain, stem, or cable.

2.10 CLASS 2 CIRCUIT – Wiring, conductors, and components connected only to a Class 2 supply source. See Class 2 Supply Source, 2.11.

2.11 CLASS 2 SUPPLY SOURCE – An electrical source such as a transformer, power supply, or battery having an open-circuit voltage that is less than 30 Vrms (42.4 Vpeak) or 60 Vdc and having limited energy available in the circuit under load conditions, including short circuit and extremely low resistance as specified by the current and VA limitations of the Article 725 of the National Electrical Code, NFPA 70.

2.12 COLD-CATHODE LAMP – An electric-discharge lamp that is characterized by an arc discharge, and in which the cathode drop is relatively high and the current density at the cathodes is relatively low.

2.13 DAMP LOCATION – See Location of Use Designation, 2.36.

2.14 DECORATIVE PART – A part which, if removed, does not result in the product no longer complying with the requirements.

2.15 DRY LOCATION – See Location of Use Designation, 2.36.

2.16 ELECTRIC DISCHARGE LIGHTING – System of illumination whereby current is passed through a gas medium. This includes neon tubing, cold cathode lamps, fluorescent, and high intensity discharge (HID) types of illumination.

2.17 ELECTRICAL EQUIPMENT – A general term including fittings, boxes, wireways, switches, receptacles, panelboards, appliances, luminaries (fixtures), and the like used as a part of an electric sign.

2.18 ELECTRODE RECEPTACLE – A contact device intended to accept electrodes of neon tubing. An individual receptacle may or may not be provided with an integral outer enclosure of metal or other material.

2.19 ELECTRODE SPLICE ENCLOSURE – Component specifically intended to enclose a splice between a GTO cable conductor and the leads of a neon tube electrode.

2.20 ELECTROLUMINESCENT – The emission of light from phosphor coatings excited by an electrostatic (capacitive) field.

AVA Documents
Document Sharing Hub
Full document details: UL 48 2022

2.21 ENCLOSURE – A part of the sign that encloses electrical and mechanical parts and components that involve the risk of electric shock, hazardous energy, fire, and moving parts capable of causing injury. All or part of the enclosure may also serve as a water shield, sign body, or sign face.

2.21.1 GLASS – The following are types of glass:

a) LAMINATED GLASS – Two or multi glass sheets bonded together, consisting of at least one glass sheet bonded to at least one other sheet of glass with an organic interlayer. When broken, cracks may appear, but the glass fragments tend to adhere to the applied organic material. See also the Standard Specification for Laminated Architectural Flat Glass, ASTM C1172.

b) ORGANIC-COATED GLASS – A sheet of glass covered with either an organic film or a coating. When broken, cracks may appear, but the glass fragments tend to adhere to the applied organic material.

c) SODA-LIME GLASS – Glass that is monolithic and based on soda-lime silicate. It can be annealed or tempered for strengthening. When broken, shards of various sizes and shapes will be released. See also the Standard Terminology of Glass and Glass Products, ASTM C162 for definition.

d) TEMPERED GLASS – Glass that has been treated so that when broken, it dices into fragments. See also the Standard Specification for Heat-Strengthened and Fully Tempered Flat Glass, ASTM C1048.

2.22 GROUNDED CONDUCTOR – A system or circuit conductor intentionally connected to ground at the building supply source, also referred to as "common" or "neutral."

2.23 GROUNDING CONDUCTOR, EQUIPMENT – The conductor used to connect the non-current-carrying metal parts of equipment, raceways, and other enclosures to the system grounded conductor, the grounding electrode conductor, or both at the service equipment or at the source of a separately derived system.

2.24 GFCI (GROUND-FAULT CIRCUIT-INTERRUPTER) – A device intended to reduce the risk of electric shock by de-energizing a circuit or portion thereof within a certain amount of time after a fault to ground has been detected.

2.25 GTO CABLE – Gas-Tube-Sign Cable (formerly known as Gas Tube Oil Ignition Cable). Rated 5 kV, 10 kV, or 15 kV for use between the secondary or output of a neon supply and neon tubing and between segments of neon tubing.

2.26 GTO SLEEVING – A component specifically identified for use over GTO cable.

2.27 GTO CABLE SPLICE ENCLOSURE – Containment device intended to enclose the splice of two lengths of GTO cable that complies with the enclosure requirements.

2.28 HEAT BARRIER – A barrier provided to reduce the required spacing, or in place of the required spacing, from a heat producing component.

2.29 HID (HIGH-INTENSITY DISCHARGE) LAMP – A lamp that produces light from an electric discharge between electrodes in a gas or vapor at normal or high pressure. Common types include mercury vapor, metal halide, and high-pressure sodium lamps.

2.30 ILLUMINATION – Capable of emitting light from one of the following light sources such as Incandescent, Fluorescent, Induction Lighting, HID, Halogen, Xenon, Neon Tubing, Cold Cathode Lamp, LED, and Electroluminescent.

AVA Documents
Document Sharing Hub
Full document details: UL 48 2022

2.31 INSULATING BARRIER – A barrier provided in place of a required electrical spacing.

2.32 INTEGRALLY SLEEVED GTO CABLE – GTO cable that complies with the requirements for Integrally Sleeved GTO Cable in the Standard for Electric Sign Components, UL 879, and is marked "Integrally Sleeved".

2.33 LAMPHOLDER – A wiring device intended for making connection to the electrical circuits of a lamp and, in some cases, providing support.

2.34 LED (Light Emitting Diode) – A solid-state component embodying a p-n junction, emitting optical radiation when excited by an electric current.

2.35 LIVE PART – An electrically insulated or uninsulated conductive part that has a potential difference during operation with respect to ground or any other conductive part.

2.36 LOCATION OF USE DESIGNATION

a) DRY – Designation for a sign or sign component that has been evaluated for use in an environment where the component is not normally subject to dampness or wetness. Examples include inside an indoor shopping mall, inside a retail store, and other similar places.

b) DAMP – Designation for a sign or sign component that has been evaluated for use in exterior locations where protected from weather and not subject to saturation with water or other liquids, or interior locations where subject to moderate degrees of moisture, primarily by humidity and condensation. Protection overhead is generally considered to be within an area formed by an imaginary line drawn from the outer edge of the eave, overhang or sign body inward at a 45°-angle from vertical. Additionally, the interior of a sign body provided with a sign face and installed in an outdoor exposed location is considered a damp location. Examples include protected areas such as under a canopy, marquee, or a roofed porch.

c) WET – Designation of a sign or sign component that has been evaluated for use in a location that is subject to saturation with water or other liquids, such as direct spray or splashing of water or other liquids, and in unprotected locations exposed to weather.

2.37 MOBILE SIGN – A cord-connected sign that is provided with means to facilitate movement, such as being trailer mounted and does not meet one or more criteria for portable signs (e.g. size and weight limits).

2.38 NEC – National Electrical Code, NFPA 70.

2.39 NEON SUPPLY – A neon transformer or neon power supply.

2.40 NEON TUBING – Electric-discharge tubing manufactured into shapes that form letters, parts of letters, skeleton tubing, outline lighting, other decorative elements, or art forms, and filled with various inert gases.

2.41 ORDINARY TOOLS – For the purposes of these requirements, ordinary tools are defined as flat blade and Phillips head screwdrivers, nut drivers, and pliers.

2.42 OUTLET BOX – A point on a wiring system in the form of a box at which current is taken from a wiring system. Splices are made within the box.

2.43 OUTLINE LIGHTING – An arrangement of Illuminated sources that outlines or calls attention to features such as the shape of a building or window.

AVA Documents
Document Sharing Hub

Full document details: UL 48 2022

2.44 PART, ACCESSIBLE – An electrical or moving part that is not guarded by its location or by other means and that is capable of being touched by a user during operation or user servicing.

2.45 PART, CURRENT CARRYING – An electrical part such as a wire or lampholder, that carries electrical and qualifies to be considered an insulated live part.

2.46 PART, EXPOSED LIVE – Electrical part that is accessible to a user during normal use.

2.47 PART, INSULATED LIVE – Electrical part that is energized and surrounded by insulation that is suitable for the voltage involved.

2.48 PENDANT SIGN – See Canopy Sign in 2.9.

2.48.1 PHOTOVOLTAIC SIGN – An off-grid/stand alone, on-grid/non-utility interactive, or utility interactive sign powered by solar energy. It may be constructed with photovoltaic modules, controls, and/or batteries integrated into a single sign cabinet or as a separate section(s) of the photovoltaic sign.

2.49 POLYMERIC MATERIAL – Materials that are thermoplastic, thermosetting, or elastomeric.

2.50 PORTABLE SIGN – A cord connected sign weighing 22.7 kg (50 lbs) or less, has a weight times length value that does not exceed 575 kg-mm (1500 lb-in) and if provided with mounting means is removable from its mounting without the use of tools.

2.51 PRESSURE WIRE CONNECTOR – A device that establishes a connection between two or more conductors or between one or more conductors and a terminal by means of mechanical pressure and without the use of solder.

2.52 QUALIFIED SERVICING – Any servicing performed by persons trained to repair and operate the equipment, and who are familiar with the risks involved. Some examples of qualified servicing include the replacing of components such as ballasts, lampholders, switches, and electric-discharge tubing. See also User Servicing, 2.75.

2.53 RACEWAY – An enclosed metal or nonmetallic channel, including conduit and tubing, designed for holding wires, cables, or electrical components.

2.54 RECEPTACLE – A contact device for the connection of an attachment plug.

2.55 RECESSED SIGN – A sign intended to be installed in a cavity in a wall or ceiling surface so that at least part of the sign is behind the surface.

2.56 RISK OF ELECTRIC SHOCK – A risk of electric shock exists between any two uninsulated conductive parts or between an uninsulated conductive part and earth ground, if the continuous current flow through a 1500-Ω resistor in parallel with a 0.015-mF capacitor connected between the two points exceeds 0.5 mArms (0.7 mApeak) and if the open circuit voltage exceeds 30 Vrms or 42.4 Vpeak for dry, damp locations and, 15 Vrms or 21.2 Vpeak for wet locations.

2.57 RISK OF FIRE – A risk of fire exists between two conductive parts if the maximum voltage, current, or VA exceeds Class 2 limits.

2.58 RISK OF INJURY – A risk of injury exists when moving parts, sharp parts, or other physically hazardous mechanical constructions are accessible.

Documents
Document Sharing Hub
Full document details: UL 48 2022

2.59 SCREW, MACHINE – A constant diameter screw intended for threading into a nut or threaded metal material.

2.60 SCREW, SELF-DRILLING THREAD-CUTTING – A screw that drills its own hole and cuts its threads as it is installed. A common type is called a TEK screw.

2.61 SCREW, SELF-TAPPING – A screw that drills its own pilot hole and forms its own threads.

2.62 SCREW, THREAD-CUTTING – A screw that cuts its own threads in a hole into which it is screwed.

2.63 SCREW, THREAD-FORMING – A screw that forms its own threads by deforming the metal on the edges of a hole into which it is screwed.

2.64 SCREW, WIRE BINDING – A screw used as a post around which a wire is to be wrapped.

2.65 SECTION SIGN – A sign shipped as subassemblies that requires field-wiring between the subassemblies to complete the overall sign.

2.66 SIGN – An electrically operated product that through illumination or mechanical means uses words, symbols, numbers, art, or other advertisement intended to convey information, attracts attention, provides information, or serves as decoration.

2.67 SIGN BODY – Portion of a sign that provides protection from the weather but is not an electrical enclosure.

2.68 SKELETON NEON TUBING – Neon tubing that is itself the sign or outline lighting and not attached to an enclosure or sign body.

2.69 SPLICE – Any point where one wire is connected to another wire. A wire terminating at a pressure wiring terminal or wire binding screw is not considered a splice.

2.70 STATIONARY SIGN – A cord-connected sign that meets all of the following:

a) Intended to be fastened in place or located in a dedicated space;

b) If fastened in place may be removed from its intended mounting with the use of no more than ordinary tools;

c) Does not meet one or more criteria for portable signs (e.g. size and weight limitations); and

d) Does not meet one or more criteria for mobile signs (e.g. provision for movement such as wheels or a trailer).

2.71 STRAIN-RELIEF – Knot, bushing, or equivalent intended to prevent strain from being transmitted through that portion of a wire or cord outside a product to the termination point of the wire or cord inside the product.

2.72 SUBASSEMBLY – Part or segment of a sign or outline lighting system that when assembled with all subassemblies forms a complete unit or product. For example, a sign subassembly is one part of an overall sign that when mechanically and electrically are assembled together form a complete sign.

2.73 TEMPERED GLASS – Glass that has been treated so that when broken, it dices into fragments not larger than 6.5 cm^2 (1 in^2), without splintering or producing sharp edges on any piece.

Documents
Document Sharing Hub
Full document details: UL 48 2022

2.74 TRAILER SIGN – A cord connected sign intended for permanent mounting to a trailer.

2.75 USER SERVICING – Any servicing that is performed by persons other than those trained to maintain a particular sign. Replacement of neon tubing is not user servicing. Some examples of user servicing are:

a) Attaching an accessory by means of separable connectors, or by means of an attachment plug to a dedicated receptacle.

b) Resetting or replacing a protective device in a sign or a receptacle circuit that is overloaded by the user.

c) Resetting a circuit breaker or replacing a fuse, automatic starter, or lamp, that is accessible without the use of a tool.

d) Changing of advertising material and routine cleaning.

2.76 WATER SHIELD – A material relied upon to reduce the entrance of water into a sign or prevent the entrance of water onto current-carrying parts within a sign.

2.77 WET LOCATION – See Location of Use Designation, 2.36.

3 General

3.1 Components

3.1.1 Except as indicated in 3.1.2, a component of a product covered by this standard shall comply with the requirements for that component. See Appendix A for a list of standards covering components generally used in the products covered by this standard.

3.1.2 A component is not required to comply with a specific requirement that:

a) Involves a feature or characteristic not required in the application of the component in the product covered by this standard, or

b) Is superseded by a requirement in this standard.

3.1.3 A component shall be used in accordance with its rating established for the intended conditions of use.

3.2 Reference publications

3.2.1 Any undated reference to a code or standard appearing in the requirements of this standard shall be interpreted as referring to the latest edition of that code or standard.

3.3 Units of measurement

3.3.1 Values stated without parentheses are the requirement. Values in parentheses are explanatory or approximate information.

3.3.2 Unless otherwise indicated, all voltage and current values mentioned in this Standard are AC root-mean-square (rms).

Documents
Document Sharing Hub

Full document details: UL 48 2022

4 Construction

4.1 Mechanical

4.1.1 General

4.1.1.1 A sign shall be constructed in accordance with the requirements of 4.1 to have the strength and rigidity required to resist the environment to which it is subjected.

4.1.1.2 Parts of a sign that are only decorative in nature and do not affect the integrity of the sign need not comply with 4.1.

4.1.1.3 All parts, subassemblies, and components shall be secured to prevent loosening, unintended rotation, or turning, etc.

4.1.1.4 Moving parts of a sign or associated equipment, accessible during intended operation or user maintenance, as determined by the articulate probe in Figure 4.3, and that present a risk of injury to persons must be adequately guarded or protected to prevent contact by user or operator. See 4.4.2 for accessibility requirements.

4.1.1.5 An edge subject to contact by wiring or other electrical components shall not be sufficiently sharp to abrade, cut, or otherwise damage electrical insulation.

4.1.1.6 An edge subject to contact by persons during normal operation or maintenance shall not be sufficiently sharp to constitute a risk of injury.

4.1.1.7 Signs not constructed in accordance with the minimum thermal spacing requirements of 4.2.3.2 shall comply with the Temperature Test Requirements in 5.2.

4.1.2 Materials

4.1.2.1 General

4.1.2.1.1 Materials used to construct signs shall comply with the appropriate requirements in 4.1.2.

4.1.2.2 Metal

4.1.2.2.1 Thickness

4.1.2.2.1.1 The minimum thickness of metal relied upon as an enclosure in accordance with 4.1.3 shall be as specified below:

a) Cast metal shall comply with Table 4.1,

b) Sheet and extruded metals shall comply with Table 4.2,

c) Aluminum, copper, or brass shall comply with Table 4.3.

Documents
Document Sharing Hub
Full document details: UL 48 2022

Table 4.1
Thickness of cast-metal enclosures

Material or location	Minimum thickness of cast metal			
	Unreinforced		Reinforced	
	mm	(in)	mm	(in)
Cast metal	3.2	0.126	2.4	0.094
Cast malleable iron	2.4	0.094	1.6	0.063
At a threaded conduit hole	2.4	0.094	1.6	0.063
At an unthreaded conduit hole	2.0	0.079	1.2	0.047

1) Reinforced – When the material is provided with integrally cast angles, channels, ribs, flanges or ridges.

2) Threads and breakouts – Areas around threads, breakouts, or similar features, are permitted to be thinner, providing the strength of structure is not affected, but in no cast thinner than permitted for the same length of sheet metal.

Table 4.2
Minimum thickness of uncoated and zinc coated steel

Specific construction		Uncoated steel				Zinc coated or galvanized steel			
		Unreinforced		Reinforced		Unreinforced		Reinforced	
		mm	(in)	mm	(in)	mm	(in)	mm	(in)
At opening for conduit connection		0.66	0.026	0.66	0.026	0.74	0.029	0.74	0.029
Length not more than 38 cm (15 in)	No electrical component support	0.41	0.016	0.33	0.013	0.48	0.019	0.41	0.016
	Electrical component support	0.41	0.016	0.41	0.016	0.48	0.019	0.48	0.019
Length more than 38 cm (15 in) and less than 66 cm (26 in)	No electrical component support	0.41	0.016	0.33	0.013	0.48	0.019	0.48	0.019
	Electrical component support	0.51	0.020	0.41	0.016	0.58	0.023	0.48	0.019
Length 66 cm (26 in) and greater	No electrical component support	0.51	0.020	0.41	0.016	0.58	0.023	0.48	0.019
	Electrical component support	0.66	0.026	0.51	0.020	0.74	0.029	0.58	0.023

1) Length – the longest straight line that can be drawn on any unsupported section of an enclosure. The longest straight line is measured in any direction regardless of the shape of the enclosure section in any direction. The longest straight line for an enclosure section that is frame supported in accordance with 4.1.2.2.1.6 and 4.1.2.2.1.7 is measured in any direction on the enclosure panel between the frame supporting members.

2) Length and Frame supported – A section of an enclosure secured to framing members not integral to the enclosure panel in accordance with 4.1.2.2.1.6 and 4.1.2.2.1.7.

3) Unreinforced – A section of an enclosure as described in 4.1.2.2.1.3 or that does not comply with the requirements in 4.1.2.2.1.2 and 4.1.2.2.1.4 for being a reinforced enclosure section.

4) Reinforced – A section of an enclosure that is provided with curves, ribs, breaks or flanged surfaces in accordance with 4.1.2.2.1.2 and 4.1.2.2.1.4.

5) No electrical component support – the minimum thickness required when no electrically components are secured to and supported by the enclosure surface.

Documents
Document Sharing Hub
Full document details: UL 48 2022

Table 4.3
Minimum thickness of aluminum, copper, or brass enclosures

Specific construction		Copper, brass, aluminum sheet and extruded aluminum			
		Unreinforced		Reinforced	
		mm	(in)	mm	(in)
At opening for conduit connection		0.81	0.032	0.81	0.032
Length not more than 38 cm (15 in)	No electrical component support	0.51	0.020	0.51	0.020
	Electrical component support	0.51	0.020	0.51	0.020
Length more than 38 cm (15 in) and less than 66 cm (26 in)	No electrical component support	0.51	0.020	0.51	0.020
	Electrical component support	0.64	0.025	0.51	0.020
Length 66 cm (26 in) and greater	No electrical component support	0.56	0.022	0.51	0.020
	Electrical component support	0.71	0.028	0.56	0.022

1) Length – the longest straight line that can be drawn on any unsupported section of an enclosure. The longest straight line is measured in any direction regardless of the shape of the enclosure section in any direction. The longest straight line for an enclosure section that is frame supported in accordance with 4.1.2.2.1.6 and 4.1.2.2.1.7 is measured in any direction on the enclosure panel between the frame supporting members.

2) Length and Frame supported – A section of an enclosure secured to framing members not integral to the enclosure panel in accordance with 4.1.2.2.1.6 and 4.1.2.2.1.7.

3) Unreinforced – A section of an enclosure as described in 4.1.2.2.1.3 or that does not comply with the requirements in 4.1.2.2.1.2 and 4.1.2.2.1.4 for being a reinforced enclosure section.

4) Reinforced – A section of an enclosure that is provided with curves, ribs, breaks or flanged surfaces in accordance with 4.1.2.2.1.2 and 4.1.2.2.1.4.

5) No electrical component support – the minimum thickness required when no electrically components are secured to and supported by the enclosure surface.

4.1.2.2.1.2 A reinforced construction as indicated in Table 4.1, Table 4.2, and Table 4.3, is an enclosure material provided with integral angles, channels, breaks, ribs, flanges or ridges, that provides a mechanical strength across the span of the material. The reinforcement feature shall divide the enclosure into sections such that the longest dimension of all of the resulting sections is one third or less than the longest dimension of the undivided enclosure:

a) Flanges, angles or breaks that are 45° to 120° to the plane of the panel,

b) Ribs and ridges that are at least 3.2-mm (0.126-in) high from the plane of the panel with an internal angle of 45° to 120°,

c) Curves running across the shortest dimension, or

d) Channels having two 90° angles or breaks running in any direction.

4.1.2.2.1.3 The following constructions are not considered to be reinforced:

a) A single sheet with a formed edge flange around its perimeter,

b) A single sheet that is ribbed not meeting the angle criteria in 4.1.2.2.1.2,

c) A single sheet that is corrugated with the curves running parallel to the long dimension, and

AVA Documents
Document Sharing Hub
Full document details: UL 48 2022

d) A single sheet of sheet metal with reinforcement features, but secured to a peripheral frame by a means that would allow the material to flex at its center. For example, securement by physical fit into a channel.

4.1.2.2.1.4 For a cast metal to be considered as reinforced as specified in Table 4.1, the material must be provided with integrally cast angles, channels, ribs, flanges or ridges.

4.1.2.2.1.5 The length dimensions specified in Table 4.1, Table 4.2 and Table 4.3 are measured as the longest straight line that can be drawn across any unsupported section of the material. The longest straight line for an enclosure section is measured in any direction regardless of the shape. The longest straight line for an enclosure section that has a supporting frame in accordance with 4.1.2.2.1.6, is measured in any direction on the enclosure panel between the supporting frame members.

4.1.2.2.1.6 A supporting frame is a structure of angle, channel or a rigid folded length of sheet metal that is not an integral part of the enclosure panel and complies with 4.1.2.2.1.7. The supporting frame must be rigidly attached to the enclosure material at regular intervals and to other materials to which the enclosure material is secured, and have essentially the same outside dimensions as the enclosure surface.

4.1.2.2.1.7 A supporting frame shall consist of:

a) Steel or aluminum angle having a cross sectional dimension of at least 13 by 13 mm (0.5 by 0.5 in) with a minimum material thickness of 3.2 mm (0.125 in);

b) Flat metal bars which are minimum 9.5-mm (0.375-in) wide and 3.2-mm (0.125-in) thick; or

c) An internal metal structure such as a chassis, that is rigidly secured together to form a 3 dimensional structure onto which the enclosure material is secured at regular intervals.

4.1.2.2.2 Metal corrosion protection

4.1.2.2.2.1 Except as noted in 4.1.2.2.2.2, all surfaces of ferrous metal parts including hinges, bolts and fasteners, other than parts specified in 4.1.2.2.2.2, shall be protected against corrosion by galvanizing, painting, plating, corrosion resistant coating or enamel.

4.1.2.2.2.2 The following ferrous metal parts need not be protected against corrosion:

a) Punched holes and cut edges of sheet metal;

b) Edges, punched holes, and spot welds of pre-finished steel;

c) Enclosed steel pipe and hanger locations for painting and plating;

d) Shafts, bearings, sliding surfaces of a hinge, hinge pins, and other parts whose intended operation are adversely affected by plating or coating, and all parts that, in their intended operation, will be oil or grease coated;

e) Corrosion resistant ferrous metals such as stainless steel; or

f) Where the two surfaces of an identical ferrous alloy are in permanent contact.

4.1.2.2.2.3 Ferrous metal surfaces shall be prepared prior to painting, coating, or plating. The manufacturer shall have a system in place to ensure the surface is clean and free of contaminates.

Documents
Document Sharing Hub

Full document details: UL 48 2022

4.1.2.3 Polymeric material

4.1.2.3.1 A polymeric material that functions as an enclosure, an accessibility barrier to reduce the risk of electric shock or mechanical injury, or that portion of a sign body located above live parts that diverts water from contacting those live parts shall comply with the requirements in the Standard for Electric Sign Components, UL 879, applicable for its intended function and rating.

4.1.2.3.2 A polymeric material shall be spaced away from heat producing components in accordance with the thermal spacing requirements of 4.2.3.2.

4.1.2.4 Other materials

4.1.2.4.1 A material other than metal, glass, or polymeric, that is of an inorganic composition such as ceramic and porcelain, shall comply with the requirements in the Standard for Electric Sign Components, UL 879, the enclosure requirements in 4.1.3, and accessibility requirements of 4.2.2.

4.1.2.5 Gaskets

4.1.2.5.1 A gasket used to seal a joint so that a sign complies with the Exclusion of Water requirements in 5.9 shall be constructed of neoprene, rubber, neoprene-composition, rubber-composition, synthetic rubber, or similar material that complies with one of the following:

a) Investigated and found suitable for use as a weather seal in outdoor or wet location signs, luminaires, industrial control panels, or similar outdoor or wet location electrical equipment, or

b) Complies with the Gasket Aging Test in 5.7.

4.1.2.5.2 The gasket shall be secured so that it does not loosen from the mounting means.

4.1.2.5.3 The gasket of a gasketed joint that must be opened in order to relamp or change advertising material shall be secured in place by:

a) Rivets, screws, or similar mechanical means, or

b) Comply with the Gasket Adhesion Test described in 5.8.

4.1.2.5.4 The gasket and securement of the gasket shall not be damaged when the joint is opened.

4.1.3 Enclosures

4.1.3.1 General

4.1.3.1.1 An enclosure shall consist of one or more fabricated and/or prefabricated enclosures constructed in accordance with the requirements of 4.1.3.

4.1.3.1.2 Enclosure parts shall be secured by positive mechanical means, such as screws or welding.

4.1.3.1.3 The tolerance of fit between parts of wire ways or the sign enclosure shall not exceed 3.2 mm (0.127 in) in width. A 6.4-mm (0.25-in) tolerance is allowed in a raceway which circumferences the pole in a pole mounted sign.

Documents
Document Sharing Hub
Full document details: UL 48 2022

4.1.3.2 Fabricated enclosures

4.1.3.2.1 General

4.1.3.2.1.1 Metal enclosures shall comply with requirements of Table 4.1, Table 4.2, and Table 4.3.

4.1.3.2.2 Openings in fabricated enclosures

4.1.3.2.2.1 Openings shall not be located in the mounting surface, a canopy, or directly below electrical parts unless baffled in accordance with Figure 4.1.

Figure 4.1

Location of baffle – directly below

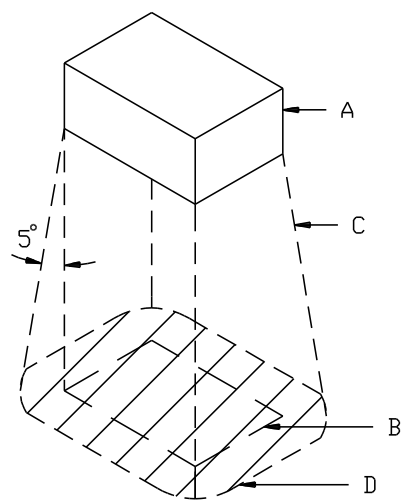

Notes:

A – Electrical component to be shielded by the barrier.

B – Projection of the component outline on a horizontal plane.

C – Inclined, 5 degree line, indicating minimum perimeter of the barrier.

D – Minimum area of the barrier.

S3812

4.1.3.2.2.2 If provided with openings, an enclosure housing open core and coil devices (e.g. Type 1 neon supply/transformers, open motors, and the like) shall comply with one of the following:

a) The openings are baffled per Figure 4.1, or

b) Openings oriented horizontally or above relative to the coil device mounting and are spaced a minimum of 15.2 cm (6 in) from the coil device.

4.1.3.2.2.3 A cover over an open hole in an enclosure shall be provided with means (such as screws, spot welding, interlock tangs and the like) to firmly secure it in place. Friction alone is not considered sufficient.

4.1.3.2.2.4 A knockout shall be adequately secured and yet removable without undue deformation of the enclosure as determined by compliance with 5.18, Conduit Knockout and Twist Out Test.

Documents
Document Sharing Hub
Full document details: UL 48 2022

4.1.3.2.2.5 A switch or other wiring device shall not be mounted to a cover that must be removed to permit the connection of circuit conductors or servicing adjustments.

4.1.3.2.2.6 If more than one open hole is provided for the supply and output connections, all but one of the open holes shall be covered such that they exist as either knockouts or covered open holes.

4.1.3.2.2.7 A knockout provided over a supply or output conduit open hole shall completely cover the opening in which it is located and the clearance between the cover and the opening shall be no more than 0.25 mm (0.010 in) before painting. The knockout thickness shall comply with the enclosure requirements.

4.1.3.2.2.8 If provisions for conduit connection are made directly to a polymeric enclosure, sign body, or other polymeric sign part, the part shall comply with all applicable requirements for that part and 5.17, Torque, Bending moment, and Conduit Pullout Test.

4.1.3.2.3 Drain openings

4.1.3.2.3.1 Except as noted in 4.1.3.2.3.2 and 4.1.3.2.3.8, the sign body and/or fabricated enclosure of a sign intended for installation in a damp or wet location shall be provided with drain openings that comply with the requirements of 4.1.3.2.3.

4.1.3.2.3.2 A sign body of a sign without a sign face or a sign body otherwise designed such that it is not capable of retaining water is not required to have drain openings.

4.1.3.2.3.3 The drain opening shall be located on the bottom or bottom edge of the back surface in an area free from obstructions that would affect drainage through the opening.

4.1.3.2.3.4 The drain opening shall be free from burrs and either circular having a diameter of 6.4 – 12.7 mm (0.25 – 0.50 in) or non-circular with the smallest dimension at least 6.4 mm (0.25 in) and an area of 32.3 – 129 mm^2 (0.05 – 0.20 in^2)

4.1.3.2.3.5 When a drain opening is located at the bottom edge of the back surface of a wall mounted sign, the opening shall be at least 12.7 mm (0.50 in) from the mounting surface of the sign or the installation instructions provided with the sign shall indicate that a minimum of 12.7-mm (0.50-in) clearance should be maintained between the drain openings and the mounting surface.

4.1.3.2.3.6 Drain openings shall be located at all of the following locations applicable for signs and internal raceways (see Figure 4.2):

a) The bottom of each of the lowest points of the sign,

b) At least one in each isolated section and at least every 1.22 m (4 ft) in each isolated section,

c) Both sides of the pole for a pole mounted sign, and

d) Horizontal troughs or retainers for supporting sign faces, panels, or letters.

Documents
Document Sharing Hub

Full document details: UL 48 2022

Figure 4.2

Example of drain hole placement

4.1.3.2.3.7 A barrier provided to block light from exiting the sign through a drain opening shall be spaced minimum 6.4 mm (0.25 in) from the surface provided with the drain opening.

4.1.3.2.3.8 Signs intended for installation in damp or wet locations need not comply with the drain opening requirements of 4.1.3.2.3 provided that they comply with either:

a) The requirements for a Type 3R or better enclosures as defined in the Standard for Enclosures for Electrical Equipment, Non-Environmental Considerations, UL 50; or

b) The Rain Test described in 3.4.1.9 in the Standard for Electric Sign Components, UL 879 where there is no indication of water entering the units.

4.1.3.2.3.9 Screens or mesh covering a drain opening is permitted when:

a) The screens or mesh are accessible for periodic inspection; and

b) Markings are provided per 7.2.18 and 8.1.7.

4.1.3.2.4 Ventilating openings

4.1.3.2.4.1 Ventilating openings shall not affect the strength and rigidity of a sign.

4.1.3.2.4.2 An enclosure that is not integral to a ballast, transformer, neon transformer or power supply, motor, clock motor, or other similar part shall:

Documents
Document Sharing Hub
Full document details: UL 48 2022

a) Have no ventilating openings when the ballast, transformer, motor, clock motor, or similar product is an open core-and-coil device or is a neon transformer or power supply with a Type 1 designation, or

b) Have no ventilating openings on the bottom surface directly under the ballast, transformer, motor, or clock motor or other similar parts that has a coil having its own enclosure (enclosed) or is a neon transformer or power supply with other than a Type 1 designation. The surface identified as the bottom shall be determined with the enclosure in the intended installation orientation.

4.1.3.2.4.3 A ventilating opening may be provided in a sign body if the construction complies with 5.9, the Exclusion of Water Test.

4.1.3.2.4.4 Except as noted in 4.1.3.2.4.5, a ventilating opening shall be covered by screening, expanded metal, or other equivalent means when the opening is a slot or louver more than 9.5-mm (3/8-in) wide or more than 9.68 cm^2 (1.50 in^2) in area, or when any other ventilating opening is more than 12.7 mm (0.50 inch) in diameter or 1.61 cm^2 (0.25 in^2) in area. An opening in the screening or expanded metal, or other equivalent means shall not permit the passage of a rod having a diameter larger than 12.7 mm (0.50 in).

4.1.3.2.4.5 A screening, expanded metal, or equivalent covering is not required when the opening does not permit the entrance of a 12.7 mm (0.50 in) diameter rod and baffles or overlapping sections of the enclosure, changes in the direction of the path through the opening, orientation of the path, or other means are provided to reduce the likelihood of debris entering the enclosure.

4.1.3.3 Prefabricated enclosures

4.1.3.3.1 The conduit, tubing, and cable specified in Table 4.4 are considered enclosures or enclosed.

Table 4.4
Conduits and Cables used as enclosures or considered enclosed

Conduit/cable type	Intended location			Uses permitted			
	Dry	Damp	Wet	To enclose conductors 1000 V or less	To enclose GTO	Minimum Trade size	Special Notes
Flexible Metallic Tubing (FMT)	A	No	No	A	No	1/2, 16	c)
Flexible Metal Conduit (FMC)	A	A	A[e)]	A	A	1/2, 16	b)
Electrical Metallic Tubing (EMT)	A	A	A	A	A	1/2, 16	
Liquid-tight Flexible Metal conduit (LFMC)	A	A	A	A	A	1/2, 16	b)
Liquid-tight Flexible Nonmetallic Conduit (LFNMC)	A	A	A	A	A	1/2, 16	a), b)
Intermediate Metal Conduit (IMC)	A	A	A	A	A	1/2, 16	
Rigid Metal Conduit (RMC)	A	A	A	A	A	1/2, 16	
Rigid Nonmetallic Conduit (RNC)	A	A	A	A	A	1/2, 16	a)
Armored Cable (AC)	A	A[d)]	A[d)]	A 600 V max	NA	NA	a)
Metal-clad Cable (MC)	A	A[d)]	A[d)]	A	NA	NA	
A – Acceptable as an enclosure or is considered enclosed NO – Cannot be used as an enclosure or is not considered enclosed							

Table 4.4 Continued on Next Page

Documents
Document Sharing Hub
Full document details: UL 48 2022

Table 4.4 Continued

Conduit/cable type	Intended location			Uses permitted			
	Dry	Damp	Wet	To enclose conductors 1000 V or less	To enclose GTO	Minimum Trade size	Special Notes

NA – Not Applicable

[a] Sunlight resistant only

[b] Factory installed wiring that is internal to a sign body or enclosure that operates at no more than 1000 V can be installed in 9.5 mm (3/8 in) trade size flexible conduit or tubing with maximum 1.83-m (6-ft) length.

[c] 1.83 m (6 ft) maximum length

[d] Must be marked for such use (plastic Jacketed)

[e] Acceptable for use in wet locations only if located or oriented so that contact with water does not occur as a result of the Exclusion of Water Test in 5.9.

4.1.3.3.2 Electrical equipment not suitable for wet locations shall be located or oriented so that contact with water does not occur as a result of the Exclusion of Water Test in 5.9.

4.1.3.3.3 The conduit, tubing, and cable indicated in Table 4.4 shall be supported at intervals not greater than those specified in Table 4.5.

Table 4.5
Maximum distance between supports for conduit, tubing, and cable

Type	Distance	
	m	(ft)
Flexible Metallic Tubing (FMT)	0.91	(3)
Flexible Metal Conduit (FMC)	1.37	(4.5)
Electrical Metallic Tubing (EMT)	3.05	(10)
Liquid-tight Flexible Metal Conduit (LFMC)	1.37	(4.5)
Liquid-tight Flexible Nonmetallic Conduit (LFNMC)	1.37	(4.5)
Intermediate Metal Conduit (IMC)	3.05	(10)
Rigid Metal Conduit (RMC)	3.05	(10)
Rigid Nonmetallic Conduit (RNC)	0.91	(3)
Armored Cable (AC)	1.37	(4.5)
Metal-clad Cable (MC)	1.83	(6)
Class 2 cable, CL2, CL3, PLTC or permitted substitution	1.83	(6)

4.1.3.3.4 Cut ends of metal conduit shall be deburred or provided with bushings.

4.1.3.3.5 Flexible metal conduit shall not be painted or similarly coated with any material unless all the following conditions are met:

a) The flexible metal conduit is not relied upon for grounding or bonding;

b) The flexible metal conduit is inside the sign body; and

c) The flexible metal conduit is installed and secured in place and not subject to movement during normal user servicing such as lamp replacement.

Documents
Document Sharing Hub
Full document details: UL 48 2022

4.1.4 Sign bodies

4.1.4.1 General

4.1.4.1.1 For a sign body constructed of glass see Supplementary Requirements, 4.4.

4.1.4.1.2 A sign body that encloses insulated or uninsulated live parts shall comply with the enclosure requirements of 4.1.

4.1.4.1.3 A polymeric sign body, other than the face, shall comply with the applicable requirements of the Standard for Electric Sign Components, UL 879.

4.1.4.1.4 Unless internal barriers, other internal sign body parts, enclosures, and the like of a wet location sign prevent water from contacting insulated and uninsulated live parts that are not identified for use in contact with water, the sign body shall prevent water from contacting the designated parts.

4.1.4.1.5 A sign body shall be secured by positive mechanical means, such as screws or welding.

4.1.4.1.6 Access covers located on the top or side of a wet location sign body shall have mechanical provisions or gaskets to prevent the intrusion of water.

4.1.4.2 Faces

4.1.4.2.1 A sign face or multiple section face shall be secured such that during normal movement of the face the sign shall comply with 5.9, Exclusion of Water Test.

4.1.4.2.2 A means such as a barrier, securement, or equivalent shall be provided so that the movement of the sign face does not reduce spacings below the minimum required to a live part or heat producing component as specified in 4.2.3.

4.1.4.2.3 A rigid polymeric sign face shall not be relied upon to support electrical components such as through wall housings, conduit connections, and the like unless the sign face complies with the applicable requirements in the Standard for Electric Sign Components, UL 879.

4.1.4.2.4 A flexible sign face shall comply with the applicable requirements of the Standard for Electric Sign Components, UL 879.

4.1.4.3 Openings in sign bodies

4.1.4.3.1 Openings in a sign body shall comply with 5.9, the Exclusion of Water Test.

4.1.4.3.2 Openings in a sign body shall comply with 4.2.2, accessibility to live parts.

4.1.4.3.3 Exterior-use, non-hardening sealant may be used to seal an opening in a sign body acting as a water shield if used in a location where it is not disturbed during relamping, changing copy, or other similar user functions.

4.1.5 Fastening methods

4.1.5.1 General

4.1.5.1.1 Materials, equipment and products in signs must be constructed to:

Documents
Document Sharing Hub
Full document details: UL 48 2022

a) Provide strength and rigidity and prevent movement that would result in a failure of the sign to comply with the requirements of this standard, and

b) Avoid damage to conductors or electrical equipment.

4.1.5.1.2 Each joint and edge in metal, thermoplastics and other materials shall be fastened or secured in place, such as by welds, solder, rivets, adhesives, formed joints, retaining troughs, retaining clips, hinges, bolts, or screws, to complete an assembly constructed for its intended use.

4.1.5.1.3 Other fastening methods and spacings may be used if found to provide adequate strength, rigidity, and reliability.

4.1.5.2 Spacings of fastenings

4.1.5.2.1 In a sign, the spacing of fastenings shall be:

a) Continuous for formed joints, retaining troughs, solder and adhesive;

b) No greater than the following:

1) For mechanical fasteners 205 mm (8 in) for metal less than 0.79-mm (0.031-in) thick;

2) For mechanical fasteners 305 mm (12 in) for metal at least 0.79-mm (0.031-in) thick, and less than 1.27-mm (0.050-in) thick;

3) For mechanical fasteners 305 mm (12 in) for metal less than 0.79-mm (0.031-in) thick and mounted on a structural framework;

4) For mechanical fasteners 610 mm (24 in) for metal 1.27-mm (0.050-in) thick or more; and

5) For mechanical fasteners 610 mm (24 in) for metal at least 0.79 mm (0.031 in) and less than 1.27-mm (0.050-in) thick when the metal is mounted on a structural framework.

c) Noncontinuous clamping or tensioning system for flexible material provided it meets the following:

1) The system will not tear the flexible material;

2) Flexing of the face does not result in a failure of the Exclusion of Water Test;

3) Flexing of the face does not result in a failure to maintain the minimum Temperature Spacing requirements; and

4) Flexing of the face does not touch or damage internal components.

d) Other minimum spacings or spacing configurations that have been evaluated and found to provide equivalent mechanical security.

4.1.5.2.2 A support clip or trough of material other than metal may be used if investigated and found acceptable.

4.1.5.2.3 A polymeric support clip or trough relied upon to retain a sign face in position shall comply with the Standard for Electric Sign Components, UL 879, and be identified for the use.

Documents
Document Sharing Hub

Full document details: UL 48 2022

4.1.5.3 Screws

4.1.5.3.1 Screws used to secure sign parts to polymeric materials or to sheet aluminum, copper, or aluminum- or copper-base alloys of less than 1.27-mm (0.050-in) thickness shall be tightened in accordance with fastener manufacturer's securement and/or torque recommendations such that they do not strip or pull out.

4.1.5.3.2 Screws, other than machine screws and nuts, relied upon to support a part weighing 3.4 kg (7.5 lbs) or more per screw shall comply with 5.20, Self-threading Screw Torque Test.

4.1.5.3.3 Except as noted in 4.1.5.3.4, self-drilling thread cutting and thread-forming screws shall not be used to secure a door, cover, or component, or be utilized as a terminal type screw that will be removed or replaced during field servicing.

4.1.5.3.4 Self-drilling thread cutting and thread forming screws are not prohibited from use in signs to secure panels, covers, sign or channel letter faces, or components if they are not likely to be removed or replaced during user servicing or routine maintenance such as lamp replacement.

4.1.5.4 Adhesives and sealants

4.1.5.4.1 Adhesives shall be rated for the surfaces and under the conditions of use in accordance with the Standard for Electric Sign Components, UL 879.

4.1.5.4.2 Silicone room temperature vulcanizing (RTV) used for mechanical securement shall comply with the Standard for Polymeric Materials – Use in Electrical Equipment Evaluations, UL 746C, requirements for adhesives.

4.1.5.5 Solvents and sonic welding

4.1.5.5.1 Solvent, ultrasonic welding, electromagnetic induction, and thermal welding are acceptable means of securement.

4.1.5.5.2 Plastic parts are considered secured to other plastic parts when the joint is made by a continuous solvent bond using solvent cement or ultrasonic welding means. Other types of adhesive shall be evaluated for the type of material, environment, and service temperature in accordance with the Standard for Polymeric Materials – Use in Electrical Equipment Evaluations, UL 746C.

4.1.6 Sign mounting and support

4.1.6.1 Permanently connected signs

4.1.6.1.1 Permanently connected signs or sections shall be provided with means of permanent attachment to a support structure or building, such as mounting holes, fasteners, brackets, or instructions that identify locations on the sign body structurally suitable to support the sign with the acceptable fastening methods at those locations.

4.1.6.1.2 Each section of a permanently connected section sign designed to directly attach to another section shall be provided with means for such attachment.

4.1.6.2 Portable signs

4.1.6.2.1 Except as noted in 4.1.6.2.4, a portable sign shall not have any provision for being permanently mounted.

AVA Documents
Document Sharing Hub

Full document details: UL 48 2022

4.1.6.2.2 Except as noted in 4.1.6.2.4, a portable sign provided with mounting means shall be removable without the use of tools.

4.1.6.2.3 A portable sign provided with mounting means shall comply with 5.6, the mounting means test.

4.1.6.2.4 A portable sign that is intended to be mounted to a cord connected appliance, such as a refrigerated cabinet, vending machine, automatic teller machine (ATM), or similar appliance, or mounted on portable, non-electrical display equipment or store display may have provisions for being permanently mounted.

4.1.6.2.5 A free-standing type sign shall comply with 5.5, the stability test.

4.1.6.2.6 A portable hanging type sign shall be provided with hanging means and shall not be provided with open mounting holes in the sign body.

4.1.6.2.7 A portable wall mount sign shall be provided with a concealed keyhole slot, a notch, or a hanger hole such that when the sign is mounted in position on a wall the mounting hardware is inaccessible to the installer and prevented from being tightened. Keyhole slots open to the front of the sign are not permitted.

4.1.6.2.8 If a keyhole slot or notch is provided in the enclosure of a sign, it shall be located such that the supporting screw or similar mounting hardware does not contact any uninsulated parts of the sign.

4.1.6.3 Stationary signs

4.1.6.3.1 A stationary sign shall not have any provision for being permanently mounted.

4.1.6.3.2 If provided with mounting means, the sign shall be removable without disassembly.

4.1.6.3.3 If provided with mounting means, the sign shall comply with 5.6, the mounting test.

4.1.6.3.4 Free-standing stationary signs shall comply with 5.5, the stability test.

4.1.6.3.5 A stationary hanging type sign shall be provided with the hanging means and shall not be provided with open mounting holes in the sign body.

4.1.6.4 Mobile signs

4.1.6.4.1 Mobile signs shall be provided with mounting hardware for the specified trailer.

4.2 Electrical

4.2.1 General

4.2.1.1 The following requirements apply to electrical components, wiring, spacing, accessibility and other related electrical requirements and are in addition to other enclosure and construction requirements in 4.1.

Documents
Document Sharing Hub

Full document details: UL 48 2022

4.2.2 Accessibility to live parts

4.2.2.1 General

4.2.2.1.1 Except as noted in 4.2.2.1.2 and 4.2.2.1.3 contact with all uninsulated current-carrying parts shall be prevented by an enclosure or barrier.

4.2.2.1.2 An uninsulated live part connected to the secondary of a Class 2 circuit may be accessible in signs intended for use in a dry location.

4.2.2.1.3 An uninsulated live part connected to the secondary of a Class 2 circuit not exceeding 15 Vac rms and 30 Vdc may be accessible in signs intended for installation in a dry, damp or wet location.

4.2.2.1.4 Live parts of an electrical device, such as a lampholder or starter holder, may be accessible only during user maintenance.

4.2.2.1.5 A sign that is intended to have the lamps replaceable without opening the enclosure shall be constructed so that live parts and live connections are not exposed to unintentional contact while lamps are being replaced.

4.2.2.1.6 An integral raceway or compartment provided to allow branch circuit(s) or feeder conductor(s) to pass through a sign body or enclosure without supplying any circuits of the sign shall be constructed such that the through wiring will not become accessible during sign servicing.

4.2.2.2 Uninsulated parts

4.2.2.2.1 Except as noted in 4.2.2.1 and 4.2.2.2.2, all uninsulated live parts shall be inaccessible during normal use and user servicing, including lamp replacement. Accessibility is determined by use of the articulate probes in Figure 4.3 and Figure 4.4.

Documents
Document Sharing Hub
Full document details: UL 48 2022