UL 484

ISBN 1-55989-302-8

Room Air Conditioners

UL COPYRIGHTED MATERIAL –
NOT AUTHORIZED FOR FURTHER REPRODUCTION OR
DISTRIBUTION WITHOUT PERMISSION FROM UL

Documents
Document Sharing Hub

Full document details: UL 484 2005

UL COPYRIGHTED MATERIAL –
NOT AUTHORIZED FOR FURTHER REPRODUCTION OR
DISTRIBUTION WITHOUT PERMISSION FROM UL

Documents
Document Sharing Hub

Full document details: UL 484 2005

Underwriters Laboratories Inc. (UL)
333 Pfingsten Road
Northbrook, IL 60062-2096

UL Standard for Safety for Room Air Conditioners, UL 484

Seventh Edition, Dated April 27, 1993

Revisions: This Standard contains revisions through and including February 20, 2006.

Summary of Topics

These editorial revisions to ANSI/UL 484 replace all references to UL 1020, the Standard for Thermal Cutoffs for Use in Electrical Appliances and Components, with reference to UL 60691, the Standard for Thermal-Links – Requirements and Application Guide. UL 1020 was withdrawn and superseded by UL 60691.

UL Standards for Safety are developed and maintained in the Standard Generalized Markup Language (SGML). SGML -- an international standard (ISO 8879-1986) -- is a descriptive markup language that describes a document's structure and purpose, rather than its physical appearance on a page. Due to formatting differences resulting from the use of UL's new electronic publishing system, please note that additional pages (on which no requirements have been changed) may be included in revision pages due to relocation of existing text and reformatting of the Standard.

Text that has been changed in any manner is marked with a vertical line in the margin. Changes in requirements are marked with a vertical line in the margin and are followed by an effective date note indicating the date of publication or the date on which the changed requirement becomes effective.

The following table lists the future effective date with the corresponding item.

Future Effective Date	References
June 18, 2007	Paragraph 17.2.1

The revisions dated February 20, 2006 include a reprinted title page (page1) for this Standard.

The revisions dated February 20, 2006 editorially replace all references to UL 1020 with the reference to UL 60691.

The revisions dated June 30, 2005 were issued to correct an omission of words that were contained in the initial proposals but inadvertently left out of the revisions dated June 17, 2005. These revisions are editorial in nature and do not affect the requirement or future effective date.

As indicated on the title page (page 1), this UL Standard for Safety is an American National Standard. Attention is directed to the note on the title page of this Standard outlining the procedures to be followed to retain the approved text of this ANSI/UL Standard.

As indicated on the title page (page1), this UL Standard for Safety has been adopted by the Department of Defense.

The UL Foreword is no longer located within the UL Standard. For information concerning the use and application of the requirements contained in this Standard, the current version of the UL Foreword is located on ULStandardsInfoNet at: http://ulstandardsinfonet.ul.com/ulforeword.html

UL COPYRIGHTED MATERIAL –
NOT AUTHORIZED FOR FURTHER REPRODUCTION OR
DISTRIBUTION WITHOUT PERMISSION FROM UL

Documents
Document Sharing Hub

Full document details: UL 484 2005

The master for this Standard at UL's Northbrook Office is the official document insofar as it relates to a UL service and the compliance of a product with respect to the requirements for that product and service, or if there are questions regarding the accuracy of this Standard.

UL's Standards for Safety are copyrighted by UL. Neither a printed copy of a Standard, nor the distribution diskette for a Standard-on-Diskette and the file for the Standard on the distribution diskette should be altered in any way. All of UL's Standards and all copyrights, ownerships, and rights regarding those Standards shall remain the sole and exclusive property of UL.

All rights reserved. No part of this publication may be reproduced, stored in a retrieval system, or transmitted in any form by any means, electronic, mechanical photocopying, recording, or otherwise without prior permission of UL.

Revisions of UL Standards for Safety are issued from time to time. A UL Standard for Safety is current only if it incorporates the most recently adopted revisions.

UL provides this Standard ″as is″ without warranty of any kind, either expressed or implied, including but not limited to, the implied warranties of merchantability or fitness for any purpose.

In no event will UL be liable for any special, incidental, consequential, indirect or similar damages, including loss of profits, lost savings, loss of data, or any other damages arising out of the use of or the inability to use this Standard, even if UL or an authorized UL representative has been advised of the possibility of such damage. In no event shall UL's liability for any damage ever exceed the price paid for this Standard, regardless of the form of the claim.

UL will attempt to answer support requests concerning electronic versions of its Standards. However, this support service is offered on a reasonable efforts basis only, and UL may not be able to resolve every support request. UL supports the electronic versions of its Standards only if they are used under the conditions and operating systems for which it is intended. UL's support policies may change from time-to-time without notification.

UL reserves the right to change the format, presentation, file types and formats, delivery methods and formats, and the like of both its printed and electronic Standards without prior notice.

Purchasers of the electronic versions of UL's Standards for Safety agree to defend, indemnify, and hold UL harmless from and against any loss, expense, liability, damage, claim, or judgement (including reasonable attorney's fees) resulting from any error or deviation introduced while purchaser is storing an electronic Standard on the purchaser's computer system.

If a single-user version electronic Standard was purchased, one copy of this Standard may be stored on the hard disk of a single personal computer, or on a single LAN file-server or the permanent storage device of a multiple-user computer in such a manner that this Standard may only be accessed by one user at a time and for which there is no possibility of multiple concurrent access.

If a multiple-user version electronic Standard was purchased, one copy of the Standard may be stored on a single LAN file-server, or on the permanent storage device of a multiple-user computer, or on an Intranet server. The number of concurrent users shall not exceed the number of users authorized.

Electronic Standards are intended for on-line use, such as for viewing the requirements of a Standard, conducting a word search, and the like. Only one copy of the Standard may be printed from each single-user version of an electronic Standard. Only one copy of the Standard may be printed for each

UL COPYRIGHTED MATERIAL –
NOT AUTHORIZED FOR FURTHER REPRODUCTION OR
DISTRIBUTION WITHOUT PERMISSION FROM UL

Documents
Document Sharing Hub

Full document details: UL 484 2005

authorized user of a multiple-user version of an electronic Standard. Because of differences in the computer/software/printer setup used by UL and those of electronic Standards purchasers, the printed copy obtained by a purchaser may not look exactly like the on-line screen view or the printed Standard.

An employee of an organization purchasing a UL Standard can make a copy of the page or pages being viewed for their own fair and/or practical internal use.

The requirements in this Standard are now in effect, except for those paragraphs, sections, tables, figures, and/or other elements of the Standard having future effective dates as indicated in the note following the affected item. The prior text for requirements that have been revised and that have a future effective date are located after the Standard, and are preceded by a ″SUPERSEDED REQUIREMENTS″ notice.

New product submittals made prior to a specified future effective date will be judged under all of the requirements in this Standard including those requirements with a specified future effective date, unless the applicant specifically requests that the product be judged under the current requirements. However, if the applicant elects this option, it should be noted that compliance with all the requirements in this Standard will be required as a condition of continued Listing, Recognition and Follow-Up Services after the effective date, and understanding of this should be signified in writing.

Copyright © 2006 Underwriters Laboratories Inc.

UL COPYRIGHTED MATERIAL –
NOT AUTHORIZED FOR FURTHER REPRODUCTION OR
DISTRIBUTION WITHOUT PERMISSION FROM UL

Documents
Document Sharing Hub

Full document details: UL 484 2005

This Standard consists of pages dated as shown in the following checklist:

Page	Date
1	February 20, 2006
2-10B	November 19, 2004
11	April 27, 1993
12-14B	September 3, 2002
15-18	April 27, 1993
19-20	November 19, 2004
21	April 27, 1993
22	October 28, 1998
23	September 3, 2002
24-24B	October 28, 1998
25-32	November 19, 2004
33	April 27, 1993
34-34B	November 19, 2004
35-39	April 27, 1993
40	February 20, 2006
40A-40B	November 19, 2004
41	October 28, 1998
42	April 27, 1993
43-44	October 28, 1998
44A-46	September 3, 2002
47	February 20, 2006
48	September 3, 2002
49-52A	November 19, 2004
52B	May 2, 1996
53	February 5, 1998
54	April 27, 1993
55-57	June 24, 1997
58-60	November 19, 2004
61-62B	October 28, 1998
63	April 27, 1993
64-65	September 3, 2002
66	October 28, 1998
66A	November 19, 2004
66B	October 28, 1998
67-72	April 27, 1993
73	May 2, 1996
74-74B	June 24, 1997
75	April 27, 1993
76-76B	November 19, 2004
77-83	April 27, 1993
84	August 6, 1996
85	April 27, 1993
86	August 6, 1996
87	November 19, 2004
88	April 27, 1993
89-90D	November 19, 2004
91	April 27, 1993
92	October 28, 1998
92A	September 3, 2002

UL COPYRIGHTED MATERIAL –
NOT AUTHORIZED FOR FURTHER REPRODUCTION OR
DISTRIBUTION WITHOUT PERMISSION FROM UL
Documents
Document Sharing Hub
Full document details: UL 484 2005

92B-96 . . . . . October 28, 1998
97-98 . . . . . April 27, 1993
99-101. . . . . May 2, 1996
102 . . . . . November 19, 2004
103 . . . . . April 27, 1993
104-104B . . . . . September 3, 2002
105-108B. . . . . November 19, 2004
109 . . . . . April 27, 1993
110 . . . . . November 19, 2004
111-112 . . . . . September 3, 2002
A1 . . . . . February 20, 2006
A2 . . . . . September 3, 2002
CRG1 . . . . . February 5, 1998
CRG2 . . . . . September 3, 2002
CRG3-CRG4 . . . . . November 19, 2004

UL COPYRIGHTED MATERIAL –
NOT AUTHORIZED FOR FURTHER REPRODUCTION OR
DISTRIBUTION WITHOUT PERMISSION FROM UL
Documents
Document Sharing Hub
Full document details: UL 484 2005

No Text on This Page

UL COPYRIGHTED MATERIAL –
NOT AUTHORIZED FOR FURTHER REPRODUCTION OR
DISTRIBUTION WITHOUT PERMISSION FROM UL

Documents
Document Sharing Hub

Full document details: UL 484 2005

APRIL 27, 1993
(Title Page Reprinted: February 20, 2006)

ANSI/UL 484-2005

1

UL 484

Standard for Room Air Conditioners

First Edition – August, 1954
Second Edition – September, 1957
Third Edition – December, 1961
Fourth Edition – January, 1972
Fifth Edition – March, 1973
Sixth Edition – March, 1982

Seventh Edition

April 27, 1993

The most recent designation of ANSI/UL 484 as an American National Standard (ANSI) occurred on June 3, 2005. The ANSI approval for this standard does not include the cover page, transmittal pages, title page, or Canadian Requirement Comparison Guide (CRG).

This ANSI/UL Standard for Safety, which consists of the Seventh Edition, with revisions through February 20, 2006, is under continuous maintenance, whereby each revision is ANSI approved upon publication. Comments or proposals for revisions on any part of the Standard may be submitted to UL at any time. Proposals should be submitted via a Proposal Request in UL's On-Line Collaborative Standards Development System (CSDS) at http://csds.ul.com.

An effective date included as a note immediately following certain requirements is one established by Underwriters Laboratories Inc. and is not part of the ANSI Standard.

The Department of Defense (DoD) has adopted UL 484 on February 5, 1993. The publication of revised pages or a new edition of this Standard will not invalidate the DoD adoption.

Revisions of this Standard will be made by issuing revised or additional pages bearing their date of issue. A UL Standard is current only if it incorporates the most recently adopted revisions, all of which are itemized on the transmittal notice that accompanies the latest set of revised requirements.

ISBN 1-55989-302-8

COPYRIGHT © 1973, 2006 UNDERWRITERS LABORATORIES INC.

UL COPYRIGHTED MATERIAL –
NOT AUTHORIZED FOR FURTHER REPRODUCTION OR
DISTRIBUTION WITHOUT PERMISSION FROM UL

Documents
Document Sharing Hub

Full document details: UL 484 2005

No Text on This Page

UL COPYRIGHTED MATERIAL –
NOT AUTHORIZED FOR FURTHER REPRODUCTION OR
DISTRIBUTION WITHOUT PERMISSION FROM UL

Documents
Document Sharing Hub

Full document details: UL 484 2005

CONTENTS

INTRODUCTION

1 Scope 7
2 General 7
2.1 Components 7
2.2 Units of measurement 8
2.3 Terminology 8
2.4 Undated references 8
3 Glossary 8
4 Installation and Operating Instructions 10A

CONSTRUCTION

5 General 10B
6 Assembly 10B
7 Accessories 15
8 Enclosures 16
8.1 General 16
8.2 Enclosures exposed to weather 19
9 Polymeric Materials 21
9.1 General 21
9.2 Material classification 22
9.3 Ignition sources 22
9.4 Material application 22
10 Mounting Hardware 25
11 Field Supply Connections 25
11.1 Permanently-connected units 25
11.2 Cord-connected units 29
11.3 Grounding 30A
12 Internal Wiring 30B
12.1 General 30B
12.2 High-voltage circuits 31
12.3 Low-voltage circuits 33
12.4 Wiring method 33
12.5 Short circuit protection 34
13 Separation of Circuits 34A
14 Bonding for Grounding 35

ELECTRICAL COMPONENTS

15 Capacitors 38
16 Current-Carrying Parts 39
17 Electric Air Heaters 39
17.1 Heater elements 39
17.2 Heater overtemperature control 40
17.3 Heater overcurrent protection 40
18 Fuseholders and Circuit Breakers 40A
18.1 Fuseholders 40A
18.2 Circuit breakers 41
19 Insulating Material 41

UL COPYRIGHTED MATERIAL –
NOT AUTHORIZED FOR FURTHER REPRODUCTION OR
DISTRIBUTION WITHOUT PERMISSION FROM UL
Documents
Document Sharing Hub
Full document details: UL 484 2005

20 Motors and Motor Overload Protection 41
21 Switches and Controllers 44B
22 Transformer Protection 47
22.1 High-voltage transformer 47
22.2 Overcurrent protective device 49
23 High-Voltage Control Circuit Conductor Overcurrent Protection 50
23.1 General 50
23.2 Direct-connected high-voltage control circuit 50
23.3 Tapped high-voltage control circuit 50
23.4 Overcurrent protective device 51

ELECTRICAL SPACINGS

24 High-Voltage Circuits 52
25 Low-Voltage Circuits 53

REFRIGERATION SYSTEM

26 Refrigerant 53
27 Pump-Down Capacity 53
28 Refrigerant Tubing and Fittings 54
29 Refrigerant-Containing Parts 55
30 Pressure-Limiting Device 55
31 Pressure Relief 56
31.1 General 56
31.2 Required discharge capacity 56
31.3 Relief valves 57
31.4 Fusible plugs or rupture members 57

PERFORMANCE

32 Instrumentation 58
32.1 Temperature measurements 58
32.2 Pressure measurements 59
33 Test Voltage 59
34 Leakage Current Test – Cord-Connected Room Air Conditioners 60
35 Rain Test 62
36 Test Conditions for Input Test and Temperature-Pressure Test 66
37 Input Test 67
37.1 General 67
37.2 Cooling load 67
37.3 Heating load (reverse cycle heat only) 67
37.4 Heating load (resistance heat only) 67
37.5 Heating load (combination reverse cycle and resistance heat) 67
38 Temperature and Pressure Test 68
39 Starting Test 72
40 Dielectric Voltage-Withstand Test 73
41 Condenser Fan Motor Failure Test 74
42 Condenser Water Failure Test 74A
43 Temperature Test – Steam Or Hot Water Heat 75
44 Temperature Test – Resistance Heat 75
45 Abnormal Tests – Resistance Heat 76
45.1 General 76

UL COPYRIGHTED MATERIAL –
NOT AUTHORIZED FOR FURTHER REPRODUCTION OR
DISTRIBUTION WITHOUT PERMISSION FROM UL
Documents
Document Sharing Hub
Full document details: UL 484 2005

45.2 Blocked outlet 76
45.3 Restricted inlet 76
45.4 Fan Failure 76A
46 Static Loading Test 77
47 Stability Test 77
48 Overflow Test 78
49 Spillage Test 78
50 Heater Temperature-Limiting Control Tests 78
50.1 Endurance test 78
50.2 Calibration test 78
51 Maximum Continuous Current Test– Motor-Compressor Protection Devices 79
52 Limited Short-Circuit Test 80
52.1 General 80
52.2 Motor overload protective devices 81
52.3 Bonding conductors and connections 82
52.4 Motor circuit conductors and connections 82
53 Current Overload Test – Bonding Conductors and Connections 82
54 Overvoltage and Undervoltage Tests 83
55 Insulation Resistance Test 83
55.1 Sheath-type heaters 83
55.2 Thermal and Acoustical Insulation Material 83
56 Accelerated Aging Test – Electric Heaters 84
57 Reliability Test – Heater Terminations 84
58 Accelerated Aging Tests On Gaskets Sealing Compounds, And Adhesives 84
59 Metallic Coating Thickness Test 86
60 Strength Tests – Pressure Containing Components 87
60A Fatigue Test Analysis 90
60A.1 General 90
60A.2 Test specifications 90
60A.3 Material specifications 90
60A.4 General test specifications 90
60A.5 Test method 90A
60A.6 Test parameters 90A
60A.7 Cycle test pressure specification 90B

POLYMERIC MATERIALS – PERFORMANCE

61 Vertical Burning Test – 5V Materials 90B
62 Vertical Burning Test – V-0, V-1, Or V-2 Solid Polymeric Materials 90C
63 Horizontal Burning Test – HBF, HF-1, Or HF-2 Foamed Materials 90C
63.1 General 90C
63.2 Test specimens and conditioning 90C
63.3 Apparatus 91
63.4 Test method 91
63.5 Material classification 93
64 Horizontal Burning Test – HB Polymeric Material 93
65 Heat Deflection Test 94
66 Water Absorption Test 94
67 Environmental Exposure 94
67.1 Air oven aging 94
67.2 Ultraviolet light and water exposure 95
67.3 Water immersion 95
68 Tensile Strength Test 96

UL COPYRIGHTED MATERIAL –
NOT AUTHORIZED FOR FURTHER REPRODUCTION OR
DISTRIBUTION WITHOUT PERMISSION FROM UL
Documents
Document Sharing Hub
Full document details: UL 484 2005

69 Flexural Strength Test 96
70 Izod Impact Test 96
71 Burnout Test – High-Voltage Transformers 97
72 Overload Test – High-Voltage Transformers 97
73 Tensile Impact Test 98
74 Impact Test 98
75 Volume Resistivity Test 99

MANUFACTURING AND PRODUCTION TESTS

76 Pressure Tests 99
77 Production Line Dielectric Voltage-Withstand Test 99
78 Production Line Grounding Continuity Test 100B

MARKING

79 General 100B
80 Permanently-Connected Units 104A
81 Cord-Connected Units 110

APPENDIX A

Standards for Components. A1

CANADIAN REQUIREMENTS COMPARISON GUIDE CRG 484

UL AND CANADIAN STANDARDS FOR ROOM AIR CONDITIONERS CRG1

UL COPYRIGHTED MATERIAL –
NOT AUTHORIZED FOR FURTHER REPRODUCTION OR
DISTRIBUTION WITHOUT PERMISSION FROM UL
Documents
Document Sharing Hub
Full document details: UL 484 2005

No Text on This Page

UL COPYRIGHTED MATERIAL –
NOT AUTHORIZED FOR FURTHER REPRODUCTION OR
DISTRIBUTION WITHOUT PERMISSION FROM UL

Documents
Document Sharing Hub

Full document details: UL 484 2005

This page intentionally left blank.

UL COPYRIGHTED MATERIAL –
NOT AUTHORIZED FOR FURTHER REPRODUCTION OR
DISTRIBUTION WITHOUT PERMISSION FROM UL

Documents
Document Sharing Hub

Full document details: UL 484 2005

INTRODUCTION

1 Scope

1.1 These requirements cover room air conditioners rated not more than 600 volts alternating current (ac) and intended for installation in accordance with the National Electrical Code, ANSI/NFPA 70.

1.2 For the purposes of this standard, room air conditioners include packaged terminal air conditioners, special purpose air conditioners, and recreational vehicle air conditioners. They are factory-made encased assemblies designed as a unit primarily to provide free delivery of conditioned air to an enclosed space, room, or zone. This equipment is intended for installation in a window, through a wall, or as a console located in or adjacent to the room, zone, or space to be conditioned. These units employ hermetic refrigerant motor-compressors with factory-charged refrigeration systems and include means for circulating air. They may also have provision for heating and ventilation.

1.2 revised November 19, 2004

1.3 With regard to 1.2, a console or in-wall type air conditioner may additionally serve a single adjacent room. Such units employ cabinet or enclosure constructions permitting attachment of an air discharge adapter or duct which extends into the adjacent room. Recreational vehicle air conditioners may also employ a limited amount of ductwork.

1.3 revised November 19, 2004

1.4 These requirements do not cover equipment intended for connection to duct systems for the purpose of providing central cooling, heating, or both.

1.5 A product that contains features, characteristics, components, materials, or systems new or different from those in use when the standard was developed, and that involves a risk of fire, electric shock, or injury to persons shall be evaluated using the appropriate additional component and end-product requirements as determined necessary to maintain the level of safety for the user of the product as originally anticipated by the intent of this standard.

2 General

2.1 Components

2.1.1 Except as indicated in 2.1.2 a component of a product covered by this standard shall comply with the requirements for that component. See Appendix A for a list of standards covering components generally used in the products covered by this standard.

2.1.2 A component is not required to comply with a specific requirement that:

a) Involves a feature or characteristic not required in the application of the component in the product covered by this standard, or

b) Is superseded by a requirement in this standard.

2.1.2 revised September 3, 2002

UL COPYRIGHTED MATERIAL –
NOT AUTHORIZED FOR FURTHER REPRODUCTION OR
DISTRIBUTION WITHOUT PERMISSION FROM UL
Documents
Document Sharing Hub
Full document details: UL 484 2005

2.1.3 A component shall be used in accordance with its rating established for the intended conditions of use.

2.1.3 revised September 3, 2002

2.1.4 Specific components are incomplete in construction features or restricted in performance capabilities. Such components are intended for use only under limited conditions, such as certain temperatures not exceeding specified limits, and shall be used only under those specific conditions.

2.1.4 revised September 3, 2002

2.2 Units of measurement

2.2.1 Values stated without parentheses are the requirement. Values in parentheses are explanatory or approximate information.

2.2.1 revised September 3, 2002

2.3 Terminology

2.3.1 The terms ″air conditioner″ and ″unit″ are used interchangeably and refer to all room air conditioners or any part thereof covered by this standard unless specifically noted otherwise.

2.4 Undated references

2.4.1 Any undated reference to a code or standard appearing in the requirements of this standard shall be interpreted as referring to the latest edition of that code or standard.

3 Glossary

3.1 For the purpose of this standard, the following definitions apply.

3.2 ACCESSORY – An optional electrical device or other component intended for installation in or connection to a room air conditioner for the purpose of modifying or supplementing the functions of the room air conditioner. It may be factory installed or intended for installation by the user or service personnel.

3.3 BARRIER – A partition for the insulation or isolation of electrical circuits or for isolation of electrical arcs or for isolation of moving parts or hot surfaces.

3.4 CIRCUITS ELECTRICAL –

a) High-Voltage – A circuit involving a potential of not more than 600 volts and having circuit characteristics in excess of those of a low-voltage circuit.

b) Low-Voltage – A circuit involving a potential of not more than 30 volts ac (42.4 volts peak) or 30 volts direct current (dc), and supplied by:

1) A primary battery,

2) A National Electrical Code, ANSI/NFPA 70, standard Class 2 transformer, or

3) A combination of a transformer and fixed impedance which, as a unit, complies with all performance requirements for a Class 2 transformer.

3.4 revised September 3, 2002

UL COPYRIGHTED MATERIAL –
NOT AUTHORIZED FOR FURTHER REPRODUCTION OR
DISTRIBUTION WITHOUT PERMISSION FROM UL
Documents
Document Sharing Hub
Full document details: UL 484 2005

3.5 CONSOLE-TYPE ROOM AIR CONDITIONER – An assembly designed for installation in or adjacent to the room, zone, or space to be conditioned. It may provide free air delivery or air distribution by means of collars, sleeves, or the like, having a single air inlet and single air discharge opening. Air-cooled units may be provided with collars or sleeves extending through a wall, floor, or roof for condenser air inlet and discharge.

3.6 DESIGN PRESSURE – The maximum allowable working pressure for which the room air conditioner is designed.

3.7 ENCLOSURE – That part of a room air conditioner which by itself or in conjunction with barriers:

a) Renders inaccessible all or any parts of the unit that may otherwise present risk of electric shock,

b) Reduces the risk of contact with parts which may cause injury to persons, and/or

c) Prevents propagation of flame initiated by electrical disturbances occurring within the unit.

3.7.1 ENCLOSURE AIR CONDITIONER – A type of air-cooled or water-cooled air conditioner; factory assembled as a single, package. This equipment is intended for exterior mounting on or adjacent interior to an enclosure and may be suitable for outdoor use.

3.7.1 added November 19, 2004

3.8 FUNCTIONAL PART – A part other than an enclosure or structural part which is necessary for the intended operation of the unit.

3.9 IN-WALL TYPE ROOM AIR CONDITIONER – An assembly designed for installation in and extending through a prepared wall opening.

3.10 MODULAR CONSTRUCTION – A type of design used with in-wall and console room air conditioners which permits individual sections of the unit, such as the enclosure, cooling system, heater-blower assembly, and the like, to be shipped separately from the factory as needed at the point of installation. See also 5.3.

3.10.1 PACKAGED TERMINAL AIR CONDITIONER – A wall sleeve and a separate unencased combination of heating and cooling assemblies specified by the manufacturer and intended for mounting through the wall. It includes refrigeration components, separable outdoor louvers, forced ventilation, and heating availability by purchaser's choice of, at least, hot water, steam, or electric resistance heat.

3.10.1 added November 19, 2004

3.10.2 PACKAGED TERMINAL HEAT PUMP – A separate unencased refrigeration system installed in a cabinet of similar function and configuration to that of a packaged terminal air conditioner. It utilizes reverse cycle refrigeration as it's prime heat source and generally has other supplementary heat source available to purchasers with the choice of, at least, hot water, steam, or electric resistance heat.

3.10.2 added November 19, 2004

3.10.3 PORTABLE AIR CONDITIONER (SPOT COOLER) – An air-cooled or water-cooled, package air conditioner; factory assembled as a portable package, which is an encased combination of cooling and optional heating components. This equipment is intended for providing supplemental cooling; and is

UL COPYRIGHTED MATERIAL –
NOT AUTHORIZED FOR FURTHER REPRODUCTION OR
DISTRIBUTION WITHOUT PERMISSION FROM UL
Documents
Document Sharing Hub
Full document details: UL 484 2005

powered by single or three phase current. It may be suitable for outdoor use; provide dehumidifying; air cleaning; contain condenser intake/exhaust grill(s) or separate ducts; contain supply air nozzles or duct(s); contain return air plenum with duct(s), filter, or grill(s); and various ventilation options.

3.10.3 added November 19, 2004

3.11 PRESSURE VESSEL – Any refrigerant-containing receptacle of a refrigerating system other than evaporators [each separate section of which does not exceed 1/2 cubic feet (0.014 m^3) of refrigerant containing volume], evaporator coils, compressors, condenser coils, controls, headers, pumps, and piping.

3.11.1 RECREATIONAL VEHICLE AIR CONDITIONER (RVAC) – A type of air-cooled package air conditioner and heating equipment; factory assembled as a two piece system, an upper unit which consists of an exterior cover and a separate unencased cooling assembly and a ceiling unit which contains controls, vents, and optional heating components. The upper unit is intended for exterior mounting on, or through, an outside roof system; the ceiling unit is intended for interior mounting; and is powered by single phase current. It may contain separate indoor grille(s), outdoor louvers, various ventilation options, indoor free air discharge, or limited ductwork. Heating components may include electrical resistance, but may not include reverse cycle refrigeration as a heating means.

3.11.1 added November 19, 2004

3.11.2 RECREATIONAL VEHICLE HEAT PUMP – A recreational vehicle air conditioner that utilizes reverse cycle refrigeration as its primary heat source, with secondary supplemental heating by means of electrical resistance.

3.11.2 added November 19, 2004

3.11.3 SPECIAL PURPOSE AIR CONDITIONER – An air conditioner designed for special purposes, such as a spot cooler or environmental control of an electronic enclosure.

3.11.3 added November 19, 2004

3.12 STRUCTURAL PART – A part used in such manner that failure of the part may present a risk of electric shock or unintentional contact with moving parts.

3.13 ULTIMATE STRENGTH – The highest stress level which a refrigerant-containing component can tolerate without rupture.

3.14 WINDOW-TYPE ROOM AIR CONDITIONER – An assembly provided with mounting hardware designed for installation in a window.

3.15 AFCI – A device intended to mitigate the effects of arcing faults by functioning to deenergize the circuit where an arc-fault is detected.

3.15 added September 3, 2002

3.16 LCDI – A device provided in a power-supply cord that senses leakage current flowing between or from the integral cord conductors and interrupts the circuit at a predetermined level of leakage current.

3.16 added September 3, 2002

UL COPYRIGHTED MATERIAL –
NOT AUTHORIZED FOR FURTHER REPRODUCTION OR
DISTRIBUTION WITHOUT PERMISSION FROM UL

Documents
Document Sharing Hub

Full document details: UL 484 2005

4 Installation and Operating Instructions

4.1 A room air conditioner shall be provided with instructions containing directions and information that the manufacturer considers necessary for installations, use, and maintenance of the room air conditioner. These instructions are to be included with each unit or with each shipment to the installer. Applicable information concerning minimum clearance for side openings in an enclosure of a unit intended for in-wall installation shall be included.

Exception: For split-system type units the instructions need only be packaged with one of the sections or shipment of sections.

4.2 A copy of the manufacturer's instructions, or equivalent information, intended to accompany each room air conditioner, is to be furnished with the sample submitted for investigation. These instructions are to be used as a guide in the examination and test of the appliance. A printed edition is not required initially if rough draft instructions or information as to what the instructions will include are submitted for review as part of the investigation.

4.3 With reference to 4.1, console-type units not provided with the necessary air discharge diffuser, air return grille, sleeve, collar, or the like, by the room air conditioner manufacturer, are to be evaluated for accessibility of uninsulated live parts, moving parts, and rain exposure on the basis that such diffusers, grilles, and the like, are not in place. Installation instructions are to include the room air conditioner manufacturer's recommendations for such parts.

4.4 With reference to 4.1, instructions for console or in-wall type units intended to serve an additional adjacent room shall include sufficient information to install the unit in this type of application. If the unit cabinet is designed for use with a duct extension and air discharge grille which are to be provided in the field, the installation instructions shall include the room air conditioner manufacturer's recommendations for such parts. Such units are to be evaluated for accessibility of uninsulated live parts and moving parts on the basis that the grille and duct extension are not in place and the cabinet is open at the point where the duct extension is to be connected.

4.5 Instructions for cord-connected room air conditioners shall include manufacturer's recommendations regarding the use of cord sets (extension cords). If use of an extension cord is not recommended, the instructions shall state this. Recommendations for an extension cord shall specify at least the use of a cord set with an equipment grounding conductor, grounding-type attachment plug, and grounding-type connector (load fitting); and the ampacity and voltage rating of the cord set.

4.6 Installation instructions for split-system type room air conditioners not provided with interconnecting tubing for field connection of the condensing sections and evaporating sections shall specify the maximum length of interconnecting tubing to be employed.

UL COPYRIGHTED MATERIAL –
NOT AUTHORIZED FOR FURTHER REPRODUCTION OR
DISTRIBUTION WITHOUT PERMISSION FROM UL
Documents
Document Sharing Hub
Full document details: UL 484 2005

CONSTRUCTION

5 General

5.1 Ferrous metal parts used to support or retain electrical components in position shall be protected against corrosion by metallic and nonmetallic coatings, such as plating or painting.

Exception: This requirement does not apply to parts, such as washers, screws, bolts, or the like, where corrosion of such unprotected parts would not affect compliance with the requirements of this standard.

5.2 Exposed unimpregnated asbestos material shall not be used in an air handling compartment. The unprotected edge of a gasket sandwiched between two parts is considered to be exposed.

5.3 The condensing and evaporating sections of split-system room air conditioners shall be provided with means that permit the field connection of the sections in a manner that results in a completely factory-charged system.

6 Assembly

6.1 Openings in the enclosure of a room air conditioner shall be designed or located to reduce the risk of unintentional contact with:

a) Uninsulated high-voltage live parts;

b) Moving parts, such as fan blades and blower wheels; and

c) Parts within the enclosure which exceed the temperature permitted by Table 38.1, E4.

The minor dimension of such openings shall not permit passage of a 1 inch (25.4 mm) diameter hemispherically-tipped rod, applied with a force of 5 pounds (22.2 N). In evaluating openings, parts of the

UL COPYRIGHTED MATERIAL –
NOT AUTHORIZED FOR FURTHER REPRODUCTION OR
DISTRIBUTION WITHOUT PERMISSION FROM UL
Documents
Document Sharing Hub
Full document details: UL 484 2005

enclosure, such as covers, panels, and grilles are to be removed unless tools are required for their removal or when exposed, a moving part is made inoperative or an uninsulated part is de-energized through the use of interlocking devices.

Exception: The requirement of (c) does not apply to parts, such as refrigerant tubing located in the outdoor section of the unit, provided that openings adjacent to the parts will not permit passage of a rod as described above.

6.2 An opening is acceptable if the probe illustrated in Figure 6.1 cannot contact uninsulated high-voltage live parts, moving parts, or hot parts. The probe shall be applied:

a) With a force of 2.5 pounds (11.1 N) along the major axis of the probe and

b) In any possible configuration and to any depth that the size of an opening will permit.

The probe shall be rotated or angled to any possible position before, during, or after insertion through the opening; and, if necessary, the configuration shall be changed after the probe has been inserted through the opening.

Exception No. 1: For film-coated wire, an opening which will not permit passage of 3/4 inch (19 mm) diameter rod is acceptable if the probe illustrated in Figure 6.2 cannot contact the wire.

Exception No. 2: A moving part is not to be considered when judging compliance with this requirement if:

a) The part is unlikely to be contacted through the opening because of the location of fixed components, such as baffles, water and refrigerant tubing, drain tubes, and the like, or

b) The unit chassis of a slide-out type construction must be withdrawn from the enclosure to expose the moving part.

Exception No. 3: In evaluating moving parts and hot surfaces, openings of less than 1/4 inch (6.3 mm) in guards are not to be considered if application of the probe illustrated in Figure 6.2 with a force of 5 pounds (22.2 N) does not result in:

a) Penetration to a depth permitting contact with the guarded part,

b) Breakage of the guard, or

c) Permanent distortion or permanent displacement which would defeat the purpose of the guard.

UL COPYRIGHTED MATERIAL –
NOT AUTHORIZED FOR FURTHER REPRODUCTION OR
DISTRIBUTION WITHOUT PERMISSION FROM UL
Documents
Document Sharing Hub
Full document details: UL 484 2005

Figure 6.1
Articulate probe

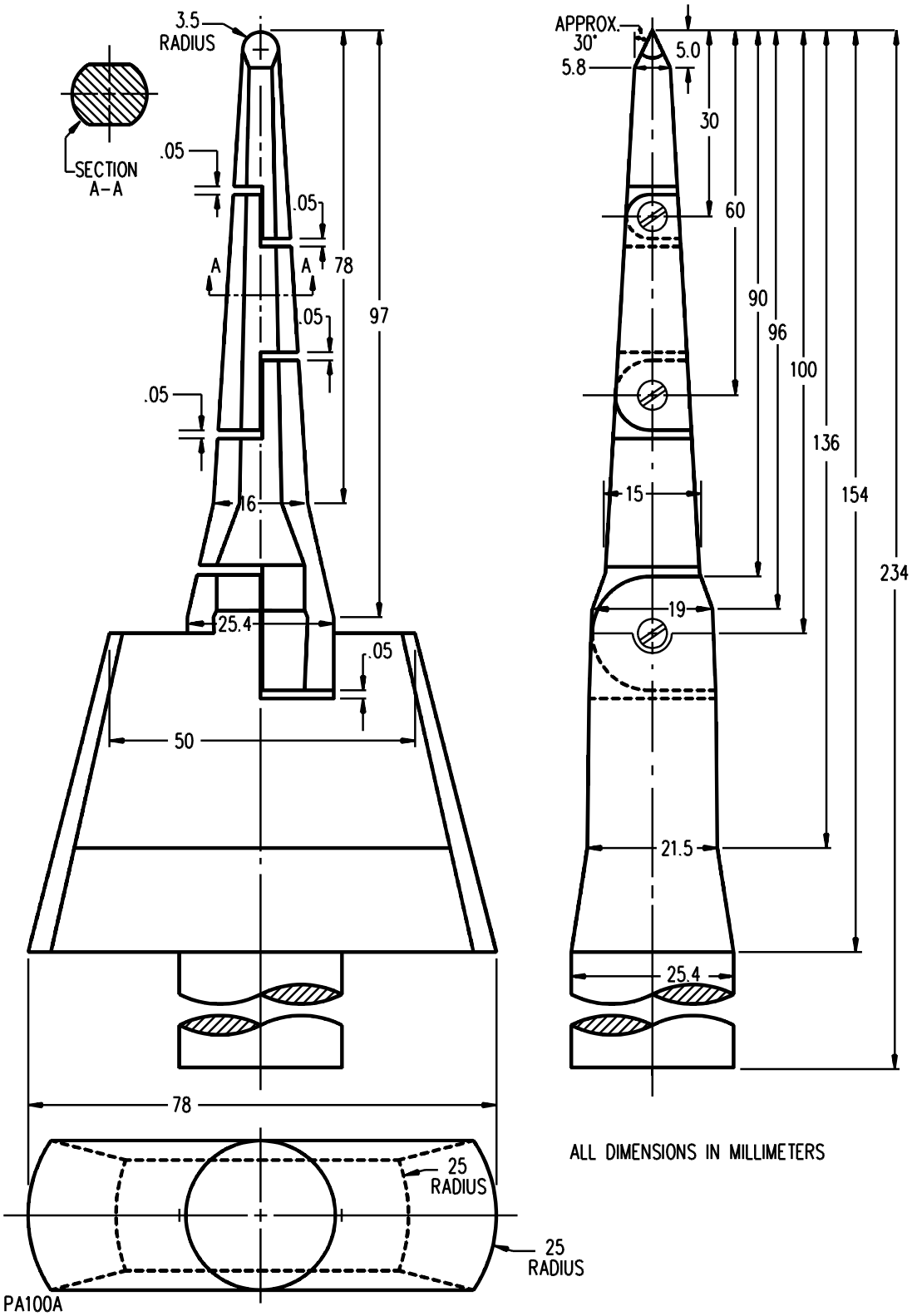

UL COPYRIGHTED MATERIAL –
NOT AUTHORIZED FOR FURTHER REPRODUCTION OR
DISTRIBUTION WITHOUT PERMISSION FROM UL

Documents
Document Sharing Hub

Full document details: UL 484 2005

Figure 6.2
Probe for film-coated wire

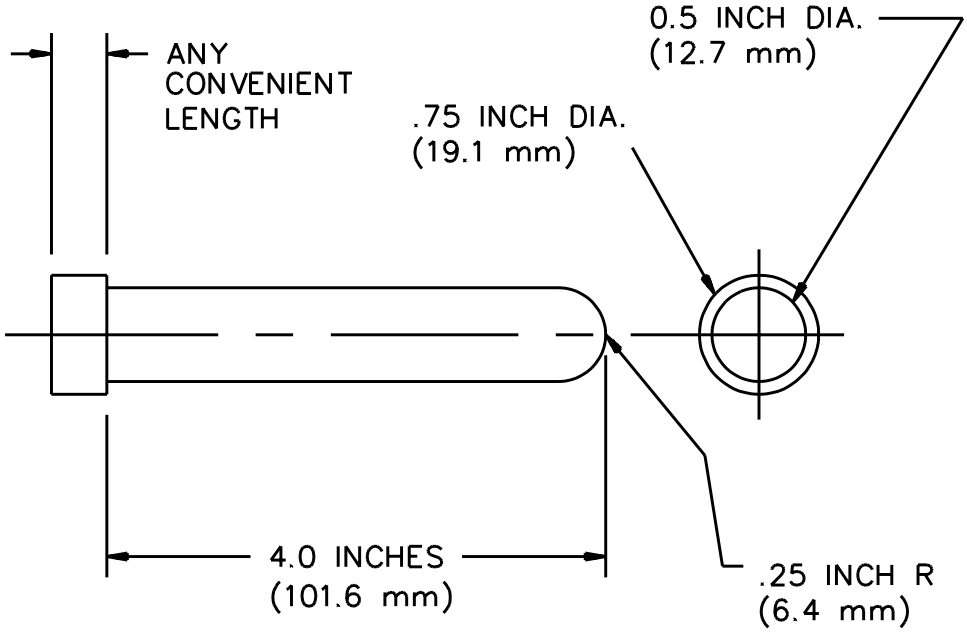

PA145

6.3 A heater element, as installed in the complete room air conditioner, shall be protected against mechanical damage. A heater element employing a copper or steel sheath that is at least 0.016 inch (0.41 mm) thick is considered to be protected against mechanical damage.

6.4 Open-type heater elements used in room air conditioners having air discharge from other than a vertical plane of the cabinet shall be protected by a screen, hardware cloth, or equivalent having openings no greater than 0.0156 square inch (0.1 cm^2), located above the heater element and any uninsulated terminals to reduce the risk of objects falling through the air discharge grille onto or near these uninsulated parts.

6.5 Uninsulated live parts and film-coated wire located:

a) In the room-side of a unit and

b) Below air openings in other than the vertical surface of the cabinet, shall be mounted or guarded so that spillage of liquid through the air opening will not result in a risk of fire or electric shock. See Spillage Test, Section 49.

Exception: The test is not applicable to units if, when installed in accordance with the manufacturer's instructions, the minimum dimension of a horizontal top surface of the cabinet is 3 inches (76.2 mm) or less.

UL COPYRIGHTED MATERIAL –
NOT AUTHORIZED FOR FURTHER REPRODUCTION OR
DISTRIBUTION WITHOUT PERMISSION FROM UL
Documents
Document Sharing Hub
Full document details: UL 484 2005

6.6 Electrical controls:

a) Located in the room-side of a unit and

b) With the actuating member(s) extending through other than a vertical surface of the cabinet, shall be mounted or guarded so that spillage of liquid will not result in a risk of fire or electric shock. See Spillage Test, Section 49.

Exception: The test is not applicable to units if, when installed in accordance with the manufacturer's instructions, the minimum dimension of a horizontal top surface of the cabinet is 3 inches (76.2 mm) or less.

6.7 In addition to the requirements of 6.1 and 6.2, uninsulated high-voltage live parts inside the enclosure which are likely to be contacted by persons performing service operations, such as replacing fuses, resetting manual-reset devices, replacing air filters, oiling motors, or the like, shall be located, guarded, or enclosed to reduce the risk of unintentional contact unless tools are required to expose the live part. See 79.15.

6.8 Except as permitted in the Rain Test, Section 35, electrical components shall be located or enclosed so that accumulation or overflow of water will not wet uninsulated live parts.

6.9 A condensate pan shall be constructed and located so that overflow due to a blocked drain will not wet live parts or film-coated wire. An overflow spout, drain hole, cutout, or the like, in the condensate pan may be acceptable for preventing dripping of water on electrical parts. An Overflow Test, Section 48, is to be conducted if it is not evident that the room air conditioner complies with this requirement.

6.10 A switch, an attachment-plug receptacle, a motor-attachment plug, or similar component shall be secured in position and shall be prevented from turning.

Exception No. 1: The requirement that a switch be prevented from turning will be waived if all of the following conditions are met:

a) The switch is of a plunger or other type that does not tend to rotate when operated. A toggle switch is considered to be subject to forces that tend to turn the switch during the operation of the switch;

b) Means of mounting the switch make it unlikely that operation of the switch will loosen it;

c) Electrical spacings shall not be reduced below the minimum required values if the switch rotates; and

d) Operation of the switch is to be by mechanical means rather than direct contact by persons.

Exception No. 2: A lampholder of a type in which the lamp cannot be replaced, such as a neon pilot or indicator light in which the lamp is sealed in a nonremovable jewel, need not be prevented from turning if rotation cannot reduce electrical spacings below the minimum acceptable values. See Electrical Spacings, Sections 24 and 25.

UL COPYRIGHTED MATERIAL –
NOT AUTHORIZED FOR FURTHER REPRODUCTION OR
DISTRIBUTION WITHOUT PERMISSION FROM UL
Documents
Document Sharing Hub
Full document details: UL 484 2005

6.11 The means for preventing rotation mentioned in 6.10 is to consist of more than friction between surfaces. A toothed lock washer that provides both spring take-up and an interference lock is acceptable as means for preventing a small stem-mounted switch or other device having a single-hole mounting means from turning.

6.12 An uninsulated current-carrying part and a part that supports a live part shall be secured so that it will be prevented from turning or shifting in position if such motion may result in a reduction of spacings below the minimum acceptable values. See Electrical Spacings, Sections 24 and 25. Friction between surfaces is not acceptable as a means to prevent shifting or turning of a live part, but a lock washer as described in 6.11 is acceptable.

UL COPYRIGHTED MATERIAL –
NOT AUTHORIZED FOR FURTHER REPRODUCTION OR
DISTRIBUTION WITHOUT PERMISSION FROM UL
Documents
Document Sharing Hub
Full document details: UL 484 2005

No Text on This Page

UL COPYRIGHTED MATERIAL –
NOT AUTHORIZED FOR FURTHER REPRODUCTION OR
DISTRIBUTION WITHOUT PERMISSION FROM UL

Documents
Document Sharing Hub

Full document details: UL 484 2005

6.13 Flammable or electrically conductive thermal or acoustical insulation shall not contact uninsulated live parts.

7 Accessories

7.1 A room air conditioner having provisions for the use of accessories to be attached in the field shall comply with the requirements of this section, and shall comply with the requirements of this standard with or without the accessory installed.

7.2 Installation of accessories by the user shall be restricted to an arrangement that can be accomplished by means of receptacles and plug-in connectors.

Exception: Low-voltage accessories may be connected to existing wiring terminals if the accessory leads terminate with connectors that will maintain electrical spacings.

7.3 Installation of accessories by service personnel shall be by means of receptacles, plug-in connectors, insulated wire connectors, or by connection to existing wiring terminals.

7.4 Installation of an accessory that requires the cutting of wiring or the soldering of connections by the installer is not acceptable. Installation of an accessory by the user shall not require cutting, drilling, or welding. Installation of an accessory by service personnel that requires cutting, drilling, or welding is not acceptable in electrical enclosures and in other areas where such operations may damage electrical or refrigeration components and wiring within the enclosure. Installation of an accessory shall not require relocation of factory-installed components.

7.5 Strain-relief means shall be provided for the wiring in the accessory if there is a possibility of transmitting stress to the terminal connections during installation.

7.6 To determine the acceptability of the strain relief means, a 20 pound (9.1 kg) weight is to be suspended on the wiring so that the strain relief means will be stressed from any angle which the design permits. The load is to be applied for 1 minute. The strain relief is not acceptable if there is such movement of the wiring as to indicate that stress would have resulted on the wiring connections.

7.7 All terminals and wiring intended to be field-connected shall be identified on the accessory, on the room air conditioner if connections are made between the accessory and the room air conditioner, and on the wiring diagram(s).

7.8 The mounting location of the accessory shall be indicated on the room air conditioner.

Exception: If the mounting location is fixed due to the function of the accessory and arrangement of the room air conditioner, and instructions are provided covering the installation and location for the accessory, the mounting location of the accessory need not be indicated on the room air conditioner.

7.9 As part of the investigation, accessories are to be trial-installed to determine that their installation is feasible and that the instructions are detailed and correct.

UL COPYRIGHTED MATERIAL –
NOT AUTHORIZED FOR FURTHER REPRODUCTION OR
DISTRIBUTION WITHOUT PERMISSION FROM UL
Documents
Document Sharing Hub
Full document details: UL 484 2005

8 Enclosures

8.1 General

8.1.1 Enclosures shall be formed and assembled so that they will have the strength and rigidity necessary to resist total or partial collapse resulting in a risk of electric shock, injury to persons, or damage to components in the refrigeration and electrical systems. Enclosures for individual components, outer enclosures, and combinations of the two are considered in determining compliance with this requirement.

8.1.2 Among the factors which are taken into consideration when evaluating an enclosure are:

a) Mechanical strength,

b) Resistance to impact,

c) Moisture-absorptive properties,

d) Flammability,

e) Resistance to distortion at temperatures to which the material may be subjected under conditions of use, and

f) Resistance to corrosion.

For a nonmetallic enclosure or part of an enclosure, all of these factors, including the effect of exposure to weathering if for outdoor use, are considered with respect to aging. See Polymeric Materials, Section 9.

8.1.3 The enclosure(s) of a room air conditioner shall reduce the risk of mechanical damage to wiring, electrical components, and refrigerant tubing.

8.1.4 The enclosure shall reduce the risk of emission of molten metal, burning insulation, flaming particles, or the like, from falling through openings onto flammable material, including surfaces over which the room air conditioner is mounted.

8.1.5 An in-wall type room air conditioner shall be provided with an enclosure by the room air conditioner manufacturer. If marked in accordance with 79.11, the enclosure may be supplied separately.

8.1.6 The enclosure, including the base pan and other structural sections, such as bulkheads and partitions of window-type room air conditioners, shall be formed and assembled so that the complete unit will comply with the requirements of the Static Loading Test, Section 46, and Stability Test, Section 47.

8.1.7 The enclosure for a window-type room air conditioner having a slide-out chassis shall prevent the chassis from being pushed through the outdoor-end of the enclosure.

8.1.8 Wall sleeves for in-wall air conditioners shall have provision for securing the sleeve in the wall opening. The unit chassis shall be prevented from being pushed through the outdoor-end of the sleeve.

8.1.9 Sheet metal to which a wiring system is to be connected in the field shall have a thickness not less than 0.032 inch (0.81 mm) if uncoated steel, not less than 0.034 inch (0.86 mm) if galvanized steel, and not less than 0.045 inch (1.14 mm) if nonferrous.

UL COPYRIGHTED MATERIAL –
NOT AUTHORIZED FOR FURTHER REPRODUCTION OR
DISTRIBUTION WITHOUT PERMISSION FROM UL
Documents
Document Sharing Hub
Full document details: UL 484 2005

8.1.10 If threads for the connection of conduit are tapped all the way through a hole in an enclosure wall, or if an equivalent construction is employed, there shall be not less than three nor more than five threads in the metal, and the construction shall be such that a conduit bushing can be attached. If threads for the connection of conduit are not tapped all the way through a hole in an enclosure wall, conduit hub, or the like, there shall be not less than 3-1/2 threads in the metal and there shall be a rounded inlet hole for the conductors which shall:

a) Afford protection to the conductor equivalent to that provided by a standard conduit bushing and

b) Have an internal diameter approximately the same as that of the corresponding trade size of rigid conduit.

8.1.11 A knockout in a sheet metal enclosure shall be secured in place, but shall be capable of being removed without deformation of the enclosure which would result in damage to electrical components or reduction in electrical spacings.

8.1.12 A knockout shall remain in place when a force of 10 pounds (44.5 N) is applied at right angles to the knockout by a 1/4 inch (6.4 mm) diameter mandrel with a flat end. The mandrel shall be applied at the point most liable to cause movement of the knockout.

8.1.13 A knockout shall be provided with a flat surrounding surface for seating of a conduit bushing and shall be located so that installation of a bushing at any knockout likely to be used during installation will not result in spacings between uninsulated live parts and the bushing of less than those required by this standard.

8.1.14 In measuring a spacing between an uninsulated live part and a bushing installed in a knockout, it is to be assumed that a bushing having the dimensions indicated in Table 8.1 is in place, in conjunction with a single locknut installed on the outside of the enclosure.

Table 8.1
Knockout or hole sizes and dimensions of bushings

Trade size of conduit		Nominal knockout or hole diameter		Bushing dimensions			
				Overall diameter		Height	
Inches	(mm O.D.)	Inches	(mm)	Inches	(mm)	Inches	(mm)
1/2	(21.3)	7/8	(22.2)	1	(25.4)	3/8	(9.5)
3/4	(26.7)	1-3/32	(27.8)	1-15/64	(31.4)	27/64	(10.7)
1	(33.4)	1-23/64	(34.5)	1-19/32	(40.5)	33/64	(13.1)
1-1/4	(42.3)	1-23/32	(43.7)	1-15/16	(49.2)	9/16	(14.3)
1-1/2	(48.3)	1-31/32	(50.0)	2-13/64	(56.0)	19/32	(15.1)
2	(60.3)	2-15/32	(62.7)	2-45/64	(68.7)	5/8	(15.9)

8.1.15 Steel enclosures shall be protected against corrosion by metallic or nonmetallic coatings, such as plating or painting. Also see 8.2.1 – 8.2.6 for enclosures exposed to weather.

8.1.16 To reduce the risk of electric shock or injury to persons, a hinged panel or cover shall be positioned or arranged so that, when it is in an open position to facilitate service operations, it is not subject to falling or swinging due to gravity or vibration.

UL COPYRIGHTED MATERIAL –
NOT AUTHORIZED FOR FURTHER REPRODUCTION OR
DISTRIBUTION WITHOUT PERMISSION FROM UL
Documents
Document Sharing Hub
Full document details: UL 484 2005

8.1.17 The assembly shall be arranged so that an overcurrent protective device, such as a fuse, can be replaced and manual-reset devices can be reset without removing parts other than a service cover(s) or panel(s), and the cover or door enclosing the device.

8.1.18 A required protective device shall not be accessible from outside the enclosure except by opening a door or cover.

Exception: The operating handle of a circuit breaker, the reset button of a manually resettable motor protector, the reset button of a manually resettable pressure switch, and similar parts may project outside the enclosure.

8.1.19 An opening in an outer enclosure around a handle, reset button, or other control member is acceptable if the clearance between the control member and the edge of the opening is not more than 1/8 inch (3.2 mm) for any setting or position of the control member.

8.1.20 Covers for enclosures of fuses in high-voltage circuits shall be hinged. Covers for enclosures of manual-reset overload protective device shall be hinged if it is necessary to open the cover to reset the device.

Exception: A hinged cover is not required where the only fuses enclosed are:

a) Supplementary type control circuit fuses, provided the fuses and control circuit loads, other than a fixed control circuit load, such as a pilot lamp, are within the same enclosure;

b) Supplementary type fuses of 2 amperes or less for auxiliary resistance heaters, such as crankcase heaters with a maximum rating of 100 watts;

c) An extractor-type fuse with its own enclosure; or

d) Fuses in low-voltage circuits.

8.1.21 Hinged covers, where required, shall not depend solely upon screws or other similar means to hold them closed, but shall be provided with a latch or the equivalent.

8.1.22 A spring latch, a magnetic latch, a dimple, or any other mechanical arrangement that will hold the door in place and will require some effort on the user's part to open, is considered to be means for holding the door in place as required in 8.1.21. When provided as the sole means for securing the cover or panel, a cover interlocking mechanism is considered to comply with the requirement of 8.1.21.

8.1.23 A door or cover giving direct access to fuses in other than low-voltage circuits shall shut closely against a 1/4 inch (6.4 mm) rabbet or shall have either turned flanges for the full length of four edges or angle strips fastened to it. Flanges or angle strips shall fit closely with the outside of the wall of the box proper and shall overlap the edges of the box not less than 1/2 inch (12.7 mm). A special construction, such as a fuse enclosure located within an outer enclosure, or a flange and rabbet combination, is acceptable.

8.1.24 Strips used to provide rabbets or angle strips fastened to the edges of a door shall be secured at not less than two points, not more than 1-1/2 inches (38.1 mm) from each end of each strip and at points between these end fastenings, not more than 6 inches (152 mm) apart.

UL COPYRIGHTED MATERIAL –
NOT AUTHORIZED FOR FURTHER REPRODUCTION OR
DISTRIBUTION WITHOUT PERMISSION FROM UL
Documents
Document Sharing Hub
Full document details: UL 484 2005

8.2 Enclosures exposed to weather

8.2.1 Sheet steel cabinets and electrical enclosures exposed to the effects of weathering shall be protected against corrosion by the following means or by other metallic or nonmetallic coatings which provide equivalent protection as follows:

Type of cabinet and enclosure	0.053 inch (1.35 mm) and heavier as specified by clause:	Lighter than 0.053 Inch (1.35 mm) as specified by clause:
Outer cabinets which protect motors, wiring or enclosed current-carrying parts	8.2.3	8.2.4
Inside enclosures which protect current-carrying parts other than motors	8.2.3	8.2.4
Outer cabinets which are the sole enclosure of current-carrying parts	8.2.4	8.2.4

8.2.2 Clause 8.2.1 is not applicable to a metal part, such as a decorative grille, which is not required for conformance with this standard.

8.2.3 To comply with the requirement of 8.2.1, one of the following coatings shall be used:

a) Hot dipped mill galvanized sheet steel conforming with the Coating Designation G60 or A60 in Table 1 of the Standard Specification for Steel Sheet, Zinc-Coated (Galvanized) or Zinc-Iron Alloy-Coated (Galvannealed) by the Hot-Dip Process, ASTM A653/A653M, with not less than 40 percent of the zinc on any side, based on the minimum single spot test requirement in the ASTM specification. The weight of zinc coating may be determined by any recognized laboratory method. However, in case of question, the weight of coating shall be established in accordance with the Standard Test Method for Weight [Mass] of Coating on Iron and Steel Articles with Zinc or Zinc-Alloy Coatings, ASTM A90/A90M. An A60 (alloyed) coating shall also comply with the requirement of 8.2.5;

b) A zinc coating, other than that provided on hot dipped mill galvanized sheet steel, uniformly applied to an average thickness of not less than 0.00041 inch (0.0104 mm) on each surface with a minimum thickness of 0.00034 inch (0.0086 mm). The thickness of the coating shall be established by the Metallic Coating Thickness Test, Section 59. An annealed coating shall also comply with the requirement of 8.2.5; or

c) Two coats of an organic finish of the epoxy or alkyd-resin type or other outdoor paint on both surfaces. The acceptability of the paint may be determined by consideration of its composition or by corrosion tests.

8.2.3 revised November 19, 2004

8.2.4 To comply with the requirement of 8.2.1, one of the following coatings shall be used:

a) Hot dipped mill galvanized sheet steel conforming with the Coating Designation G90 and Table 1 of ASTM A653/A653M with not less than 40 percent of the zinc on any side, based on the minimum single spot test requirements in the ASTM specification. The weight of zinc coating may be determined by any recognized laboratory method. However, in case of question, the weight of coating shall be established in accordance with the test method of ASTM A90/A90M;

UL COPYRIGHTED MATERIAL –
NOT AUTHORIZED FOR FURTHER REPRODUCTION OR
DISTRIBUTION WITHOUT PERMISSION FROM UL
Documents
Document Sharing Hub
Full document details: UL 484 2005

b) A zinc coating, other than that provided on hot dipped mill galvanized sheet steel, uniformly applied to an average thickness of not less than 0.00061 inch (0.0155 mm) on each surface with a minimum thickness of 0.00054 inch (0.0137 mm). The thickness of the coating shall be established by the Metallic Coating Thickness Test, Section 59. An annealed coating shall also comply with the requirement of 8.2.5;

c) A cadmium coating of not less than 0.001 inch (0.025 mm) in thickness on both surfaces. The thickness of coating shall be established by the Metallic Coating Thickness Test, Section 59;

d) A zinc coating conforming with 8.2.3 (a) or (b), with one coat of outdoor paint as specified in 8.2.3 (c); or

e) A cadmium coating of not less than 0.00075 inch (0.0191 mm) in thickness on both surfaces with one coat of outdoor paint on both surfaces; or of not less than 0.0005 inch (0.013 mm) in thickness on both surfaces with two coats of outdoor paint on both surfaces. The thickness of the cadmium coating shall be established by the Metallic Coating Thickness Test, Section 59, and the paint shall be as specified in 8.2.3 (c).

8.2.4 revised November 19, 2004

8.2.5 An annealed zinc coating which is bent or similarly formed after annealing shall additionally be painted in the bent or formed area if the bending or forming process damages the zinc coating. If flaking or cracking of the zinc coating at the outside radius of the bent or formed section is visible at 25 power magnification, the zinc coating is considered damaged. Simple sheared or cut edges and punched holes are not considered to be formed, but extruded and rolled edges and holes shall comply with this requirement.

8.2.6 With reference to the requirement in 8.2.1, other finishes, including paints, special metallic finishes, and combinations of the two, may be accepted if comparative tests with galvanized sheet steel without annealing, wiping, or other surface treatment conforming with 8.2.3 (a) or 8.2.4 (a), as applicable, indicate they provide equivalent protection. Among the factors which are taken into consideration when judging the acceptability of such coating systems are exposure to salt spray, moist carbon dioxide-sulphur dioxide-air mixtures, moist hydrogen sulphide-air mixtures, ultraviolet light, and water.

8.2.7 Nonferrous enclosures may be employed without special corrosion protection. See 8.1.2.

8.2.8 If gaskets are required to seal electrical enclosures against the entrance of rain and condensate, they shall be held in place by mechanical fasteners or adhesives, except as indicated in 8.2.7, and shall comply with the requirements of 58.2 – 58.6. Sealing compounds required to seal electrical enclosures shall comply with the requirements of 58.7. Adhesives required to secure gaskets shall comply with the requirements of 58.8. Gaskets shall be neoprene, rubber, or thermoplastic. Other materials may be used if they have equivalent properties.

8.2.9 Gaskets which are held captive either by their location or placement of other components in the enclosure when the cover is removed and which would be reengaged in the intended manner when the cover is replaced are not required to be held by mechanical fasteners or adhesives. Consideration shall be given to the intended mounting of the gasket in the application.

UL COPYRIGHTED MATERIAL –
NOT AUTHORIZED FOR FURTHER REPRODUCTION OR
DISTRIBUTION WITHOUT PERMISSION FROM UL
Documents
Document Sharing Hub
Full document details: UL 484 2005

9 Polymeric Materials

9.1 General

9.1.1 The requirements in 9.1.2 – 9.4.14 cover polymeric materials used to form outer enclosures, structural or functional parts, thermal and acoustical insulation, and miscellaneous parts of a room air conditioner. Table 9.1 indicates the properties to be evaluated, depending on the material application. These requirements do not apply to materials used as electrical insulation nor to small parts, such as control knobs, buttons, insulating bushings, resilient mounts, clamps, and wiring straps.

9.1.2 If electrical spacings between uninsulated live parts and a polymeric material are less than required by Sections 24 and 25, the material shall comply with requirements of the Volume Resistivity Test, Section 75.

Table 9.1
Evaluation of properties of polymeric materials

Characteristics to be evaluated	Enclosures	Structural parts	Thermal and acoustical insulation	Functional parts	Clause references
Flammability:					
Source of ignition					
External	Yes				9.1.3
Internal	Yes	Yes	Yes	Yes	9.4.1–9.4.14; Sections 61–64
Heat deflection	Yes	Yes			Section 65
Water absorption	Yes	Yes			Section 66
Environmental Exposure:					
Air oven aging	Yes	Yes			67.1.1, 67.1.2
Ultraviolet light and Water exposure	Yes	Yes[a]			67.2.1, 67.2.2
Water immersion	Yes	Yes			67.3.1–67.3.3
Tensile strength	Yes	Yes			Section 68
Flexural strength	Yes	Yes			Section 69
Izod or tensile impact strength	Yes	Yes			Section 70 or 73
Impact	Yes	Yes			Section 74
Volume resistivity	Yes	Yes	Yes	Yes	9.1.2; Section 75

[a] Where exposed to the effects of weathering.

UL COPYRIGHTED MATERIAL –
NOT AUTHORIZED FOR FURTHER REPRODUCTION OR
DISTRIBUTION WITHOUT PERMISSION FROM UL
Documents
Document Sharing Hub
Full document details: UL 484 2005

9.1.3 In addition to evaluating the material from the standpoint of possible ignition by sources within the room air conditioner, nonmetallic outer enclosures are also to be evaluated with regard to the effects of ignition by external sources. This generally involves intermittent flame tests and burning brand tests in accordance with Standard Tests for Fire Resistance of Roof Covering Materials, UL 790.

Exception No. 1: Intermittent flame tests may be waived if the enclosure material has a flame-spread index of 200 or less as determined by the Test Method for Surface Flammability of Materials Using a Radiant Heat Energy Source, ASTM E162-90 (Current Method).

Exception No. 2: Intermittent flame tests and burning brand tests may be waived if the enclosure material has a 5V flammability rating.

Exception No. 3: The intermittent flame and burning brand tests need not be conducted on RV type roof top air conditioners.

9.1.3 revised October 28, 1998

9.2 Material classification

9.2.1 Materials are classified with respect to flammability characteristics and are identified as 5V, V-0, V-1, V-2, HF-1, HF-2, HB, and HBF materials. Flammability characteristics are established by the tests specified in Sections 61 – 64.

9.2.1 revised October 28, 1998

9.3 Ignition sources

9.3.1 As used in 9.4.1 – 9.4.14, possible ignition sources within the unit are considered to be wiring and any electrical component, such as a switch, relay, transformer, motor winding, and the like, not enclosed in metal or in 5V material.

Exception: Wiring need not be isolated as indicated in 9.4.1 – 9.4.14 if it complies with the VW-1 flame test of the vertical flame test described in the reference Standard for Electrical Wires, Cables, and Flexible Cords, UL 1581.

9.3.1 revised October 28, 1998

9.4 Material application

9.4.1 Polymeric parts which are depended upon for the support or isolation of electrical components and parts which are exposed to ignition sources within the unit shall be a 5V material.

9.4.1 revised October 28, 1998

9.4.2 Except as indicated in 9.4.7 – 9.4.9, a polymeric material which does not comply with the flammability requirements for 5V materials shall be V-0, V-1, or V-2. Such materials shall not be used for support or isolation of wiring or electrical components.

9.4.2 revised October 28, 1998

9.4.3 A V-0 or V-1 material may be used if it is not exposed to ignition sources. See 9.4.4 and 9.4.5. A V-2 material may be used if, in addition to being isolated from ignition sources in the same manner as V-0 and V-1 materials, there are no flammable materials, openings in the unit enclosure, or both, below the V-2 material within a volume defined by Space A of Figure 9.1.

9.4.3 revised October 28, 1998

UL COPYRIGHTED MATERIAL –
NOT AUTHORIZED FOR FURTHER REPRODUCTION OR
DISTRIBUTION WITHOUT PERMISSION FROM UL
Documents
Document Sharing Hub
Full document details: UL 484 2005

Figure 9.1
Exposure to ignition

Figure 9.1 revised October 28, 1998

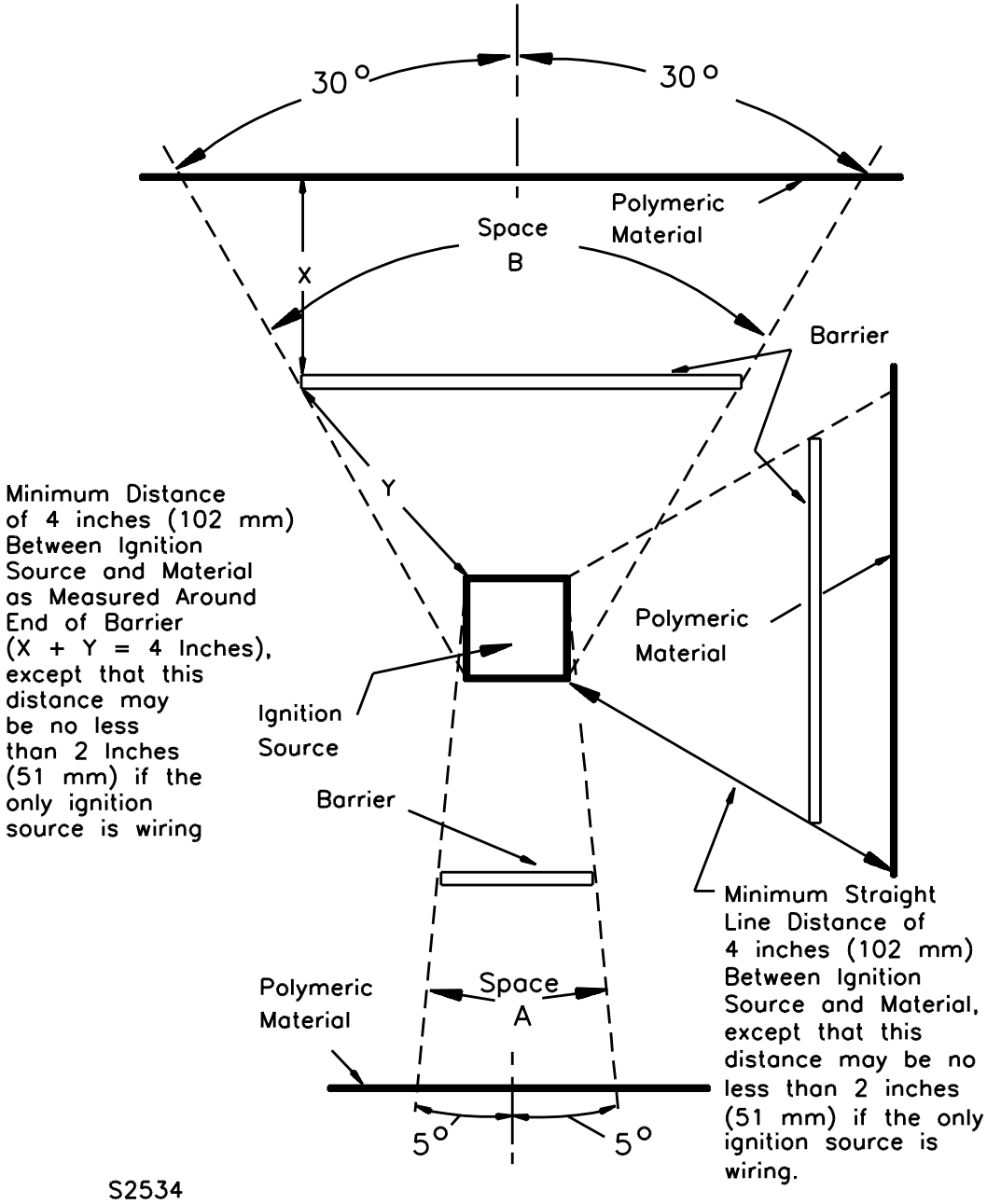

Space A – Represents the volume below the ignition source determined by a straight line that moves about the ignition source while remaining at an angle of 5° from the vertical and is always so oriented that the volume is maximum.

Space B – Represents the volume above the ignition source determined in the same manner as Space A, except that the angle is 30° from the vertical.

UL COPYRIGHTED MATERIAL –
NOT AUTHORIZED FOR FURTHER REPRODUCTION OR
DISTRIBUTION WITHOUT PERMISSION FROM UL
Documents
Document Sharing Hub
Full document details: UL 484 2005

9.4.4 A material located below the ignition source and within Space A of Figure 9.1 may be isolated by means of a horizontal barrier, extending at least to the boundary surface of the space. A material located above the ignition source and within Space B of Figure 9.1 may be isolated by means of a barrier, extending at least to the boundary surface of the space, and so located that the minimum distance between the material and ignition source is 2 inches (50.8 mm) for wiring and 4 inches (102 mm) for electrical components.

9.4.5 A material located essentially in the vertical plane and adjacent to an ignition source is considered isolated from the ignition source if it is separated from wiring by a distance of 2 inches (50.8 mm) and from electrical components by a distance of 4 inches (102 mm). A barrier may be used for isolation provided the size of the barrier is such that the minimum straight-line distance between the material and ignition source is 2 inches (50.8 mm) for wiring and 4 (102 mm) inches for electrical components. See Figure 9.1.

9.4.6 If required by 9.4.4 or 9.4.5, a barrier shall be formed of metal or of a 5V material and shall be mechanically secured in place.

9.4.6 revised October 28, 1998

9.4.7 The requirements of 9.4.2 – 9.4.5 do not apply to polymeric materials completely enclosed in metal at least 0.010 inch (0.254 mm) thick nor to materials classified as V-0, V-1, V-2, HF-1, HF-2, HB, or HBF which are laminated between two metal surfaces if:

a) The thickness of the metal of each surface is not less than 0.010 inch (0.254 mm); and

b) The exposed vertical surface of the material has a width of no more than 3/8 inch (9.5 mm).

9.4.7 revised October 28, 1998

9.4.8 In the outdoor section of the unit, HB, HBF, and HF-1 materials may be used if:

a) They are isolated from ignition sources in accordance with 9.4.4 and 9.4.5, whichever is applicable, and

b) The distance between an ignition source and ventilation opening in the bulkhead is not less than 4 inches (102 mm).

When this requirement is applied to vent doors and vent door seals comprised of HB, HBF, or HF-1 materials, isolation from the ignition sources to the material is to be maintained for all normal positions of the vent door.

9.4.8 revised October 28, 1998

9.4.9 Except as indicated in 9.4.10, HB, HBF, and HF-1 materials may be used in the room air handling section of the unit only if all ignition sources in this section are completely enclosed in or isolated by metal or 5V material. The supply cord of a cord-connected unit and a heater element are excluded. If ventilation openings are provided in the bulkhead, HB and HBF materials in the room air handling section are to be additionally isolated from ignition sources in the outdoor section by a minimum distance of 4 inches (102 mm).

9.4.9 revised October 28, 1998

UL COPYRIGHTED MATERIAL –
NOT AUTHORIZED FOR FURTHER REPRODUCTION OR
DISTRIBUTION WITHOUT PERMISSION FROM UL
Documents
Document Sharing Hub
Full document details: UL 484 2005

9.4.10 If HB and HBF materials are used in the room air handling section of the unit, leads to an electric air heater including leads to its thermal protective device, and the thermal protective device need not be enclosed provided that:

a) Individual lead lengths do not exceed 4 inches (102 mm) and

b) A metal or 5V material is interposed between the lead or thermal protective device and HB and HBF material to provide isolation.

A metal heat transfer surface may afford such isolation if it provides a minimum distance of 4 inches (102 mm), as measured through the heat transfer surface, between the heater lead or thermal protective device and HB and HBF material. Leads for other components need not be enclosed provided they are isolated as indicated above and the individual lengths of such leads do not exceed 1 inch (25.4 mm).

9.4.10 revised October 28, 1998

9.4.11 With reference to 9.4.10, if an automatic-reset thermal protective device has met the endurance test requirement of 100,000 cycles (see 50.1.2), the device need not be enclosed or isolated.

9.4.12 In the applications described in 9.4.8 – 9.4.10, HF-2 material may be used if there are no flammable materials, openings in the unit enclosure, or both, below the HF-2 material within a volume defined by Space A of Figure 9.1.

9.4.12 revised October 28, 1998

UL COPYRIGHTED MATERIAL –
NOT AUTHORIZED FOR FURTHER REPRODUCTION OR
DISTRIBUTION WITHOUT PERMISSION FROM UL

Documents
Document Sharing Hub

Full document details: UL 484 2005

No Text on This Page

UL COPYRIGHTED MATERIAL –
NOT AUTHORIZED FOR FURTHER REPRODUCTION OR
DISTRIBUTION WITHOUT PERMISSION FROM UL

Documents
Document Sharing Hub

Full document details: UL 484 2005

9.4.13 With reference to 9.4.9 and 9.4.10, the acceptability of openings in a control compartment, other than those of minimum size for the passage of power supply cords and control shafts or rods, shall be judged on the basis of the necessity for their existence. On any one surface, the minor dimension of an opening shall not exceed 3/8 inch (9.5 mm) and the maximum area shall not exceed 0.25 square inch (161 mm^2). The area may be increased to a maximum of 1.0 square inch (645 mm^2) if a barrier of metal or 5V material is secured in place and interposed between ignition sources and flammable material. In any case, the maximum aggregate area of all openings in any one surface shall not exceed 1.0 square inch.

9.4.13 revised October 28, 1998

9.4.14 With reference to 9.4.13, wiring in the control compartment shall be routed away from any openings which expose the wire to flammable materials. In judging the need for barriers, consideration is to be given to grouped openings which have an aggregate area exceeding 0.25 square inch (161 mm^2).

10 Mounting Hardware

10.1 Each window-type room air conditioner shall be provided with mounting hardware to support the unit in the window. The mounting hardware shall be painted or otherwise protected against corrosion.

10.2 The mounting hardware and installation instructions for a window-type unit shall be shipped with the room air conditioner from the factory.

Exception: The mounting hardware and installation instructions may be shipped in a kit separate from the room air conditioner provided the kit is identified in accordance with 79.18 and 79.19.

11 Field Supply Connections

11.1 Permanently-connected units

11.1.1 Room air conditioners of the following types shall have provision for permanent connection to the power supply:

a) Units that have a rated-load current exceeding 40 amperes. The largest sum of concurrent loads shown on the nameplate is used to determine the rating;

b) Units requiring plumbing connections;

Exception No. 1: Units designed to be easily moved from one place to another in use.

Exception No. 2: Units that:

1) Require removal of the cooling chassis from the cabinet for servicing,

2) Require disconnection of the branch circuit wiring connections for removal of the cooling chassis, and

3) Permit removal of the cooling chassis without disassembly of plumbing.

c) Polyphase units;

Exception: Three-phase special purpose air conditioners of the spot-cooler type provided with wheels or casters are not prohibited from being cord-connected.

UL COPYRIGHTED MATERIAL –
NOT AUTHORIZED FOR FURTHER REPRODUCTION OR
DISTRIBUTION WITHOUT PERMISSION FROM UL
Documents
Document Sharing Hub
Full document details: UL 484 2005

d) Units rated in excess of 250 volts;

Exception: Special purpose air conditioners rated up to 480 volts are not prohibited from being cord connected if they are of the portable, spot-cooler type and provided with wheels or casters.

e) Units intended for duct or plenum connection;

Exception: Units that:

1) Require removal of the cooling chassis from the cabinet for servicing,

2) Require disconnection of the branch circuit wiring connections for removal of the cooling chassis, and

3) Permit removal of the cooling chassis without disassembly of ducts.

f) Units requiring line voltage field-wired controls;

g) Units provided with means for interconnection of the condensing and evaporating sections in the field; and

h) Units requiring 120/208 or 120/240 volts, 3-wire supply circuits.

11.1.1 revised November 19, 2004

11.1.2 A room air conditioner that is intended for permanent connection to the power supply shall have provision for connection of one of the wiring systems that, in accordance with the National Electrical Code, ANSI/NFPA 70, would be acceptable for it.

11.1.2 revised November 19, 2004

11.1.3 A knockout for connection of a field-wiring system to a field-wiring compartment shall accommodate conduit of the trade size determined by applying Table 11.1.

Table 11.1
Trade size of conduit in inches

Wire size		Number of wires				
AWG	(mm^2)	2	3	4	5	6
14	(2.1)	1/2	1/2	1/2	1/2	1/2
12	(3.3)	1/2	1/2	1/2	3/4	3/4
10	(5.3)	1/2	1/2	1/2	3/4	3/4
8	(8.4)	3/4	3/4	1	1	1-1/4
6	(13.3)	3/4	1	1	1-1/4	1-1/4
4	(21.2)	1	1	1-1/4	1-1/4	1-1/2
3	(26.7)	1	1-1/4	1-1/4	1-1/2	1-1/2
2	(33.6)	1	1-1/4	1-1/4	1-1/2	2
1	(42.4)	1-1/4	1-1/4	1-1/2	2	2
1/0	(53.5)	1-1/4	1-1/2	2	2	2-1/2

NOTES

UL COPYRIGHTED MATERIAL –
NOT AUTHORIZED FOR FURTHER REPRODUCTION OR
DISTRIBUTION WITHOUT PERMISSION FROM UL

Table 11.1 Continued on Next Page

Documents
Document Sharing Hub

Full document details: UL 484 2005

Table 11.1 Continued

Wire size		Number of wires				
AWG	(mm^2)	2	3	4	5	6

1 This table is based on the assumption that all conductors will be of the same size and there will be no more than six conductors in the conduit. If more than six conductors will be involved or if all of them are not of the same size, the internal cross-sectional area of the smallest conduit that may be used is determined by multiplying by 2.5 the total cross-sectional area of the wires, based on the cross-sectional area of Type THW wire.

2 1 inch equals 25.4 mm.

11.1.4 The location of a terminal box or compartment in which power supply connections are to be made shall be such that these connections may be inspected after the unit is installed. The connections shall be accessible without removing parts other than a service cover(s) or panel(s) and the cover of the outlet box or compartment in which the connections are made.

11.1.5 A wiring compartment intended for the connection of a supply raceway shall be secured in position and shall be prevented from turning.

11.1.6 Space shall be provided in the field-wiring compartment or outlet box for installation of the number and size of conductors required by 11.1.8 using Type TW or THW wire, when at least a 6 inch (150 mm) length of each conductor is brought into the wiring compartment. If necessary, a trial installation is to be made.

Exception: Conductors other than Type TW or THW may be used if specified in the installation instructions.

11.1.7 As used in 11.1.8 – 11.1.21, field-wiring terminals or leads are considered to be the terminals or leads to which power supply, control, or equipment grounding connections will be made in the field when the room air conditioner is installed.

11.1.8 A room air conditioner shall be provided with field-wiring terminals or leads for the connection of conductors having an ampacity of not less than that indicated in 80.6. It is assumed that branch circuit conductors rated 140°F (60°C) will be used when the required circuit ampacity is 100 amperes or less and that conductors rated 167°F (75°C) will be used when the required ampacity is more than 100 amperes.

11.1.9 If field-installed power supply conductors are to be connected to the terminals or integral leads of a wiring device which has a marked electrical rating, such as a general-use receptacle, the wiring device shall have a marked rating not less than the circuit to which it will be connected.

11.1.10 A field-wiring terminal shall be secured in position by means other than friction between surfaces if turning or shifting of the terminal may result in reduction of electrical spacings to less than those required by Sections 24 and 25. This may be accomplished by means such as two screws or rivets; by square shoulders or mortices; by a dowel pin, lug, or offset; or by a connecting strap or clip fitted into an adjacent part.

UL COPYRIGHTED MATERIAL –
NOT AUTHORIZED FOR FURTHER REPRODUCTION OR
DISTRIBUTION WITHOUT PERMISSION FROM UL
Documents
Document Sharing Hub
Full document details: UL 484 2005

11.1.11 For 8 AWG (8.4 mm^2) and larger conductors, pressure wire connectors shall be used. For 10 AWG (5.3 mm^2) and smaller conductors, the parts to which wiring connections are made may consist of clamps or wire binding screws with cupped washers, terminal plates, or the equivalent, to hold the wire in position.

11.1.11 revised November 19, 2004

11.1.12 A wire binding screw at a field-wiring terminal shall be not smaller than No. 8 (4.2 mm diameter).

Exception: A No. 6 (3.5 mm diameter) screw may be used for the connection of one 14, 16, or 18 AWG (2.1, 1.3, or 0.82 mm^2) conductor.

11.1.12 revised November 19, 2004

11.1.13 It should be noted that according to the National Electrical Code, ANSI/NFPA 70, 14 AWG (2.1 mm^2) is the smallest conductor which the installer may use for branch circuit wiring and thus is the smallest conductor that may be anticipated at a terminal for the connection of a power supply wire.

11.1.13 revised November 19, 2004

11.1.14 A terminal plate for a wire binding screw shall be metal not less than 0.030 inch (0.76 mm) thick for 14 AWG (2.1 mm^2) or smaller wire and not less than 0.050 inch (1.27 mm) thick for a wire larger than 14 AWG. In either case, there shall be not less than two full threads in the metal.

11.1.14 revised November 19, 2004

11.1.15 A terminal plate formed from stock having the minimum required thickness may have the metal extruded at the tapped hole for the binding screw to provide two full threads.

Exception: Two full threads are not required if a lesser number of threads results in a connection in which the threads will not strip when tightened in accordance with the torques indicated in the Standard for Wire Connectors and Soldering Lugs for Use With Copper Conductors, UL 486A.

11.1.16 Upturned lugs or a cupped washer shall be capable of retaining a conductor of the size mentioned in 11.1.8, but no smaller than 14 AWG (2.1 mm^2), under the head of the screw or the washer.

11.1.16 revised November 19, 2004

11.1.17 A wire binding screw shall thread into metal.

11.1.18 A field-wiring terminal intended for the connection of a grounded conductor shall be of a metal, or plated with a metal, which is substantially white in color and shall be readily distinguishable from other terminals, or identification of that terminal shall be shown in some other manner, such as on an attached wiring diagram. A lead intended for the connection of a grounded conductor shall be finished to show a white or gray color, shall be readily distinguishable from other leads, and no other lead shall be so identified.

11.1.18 revised November 19, 2004

11.1.19 The length of a lead inside an outlet box or wiring compartment shall be 6 inches (152 mm) or more if the lead is intended for field connection to an external circuit.

Exception: The lead may be less than 6 inches in length if it is evident that the use of a longer lead might result in damage to the lead insulation.

UL COPYRIGHTED MATERIAL –
NOT AUTHORIZED FOR FURTHER REPRODUCTION OR
DISTRIBUTION WITHOUT PERMISSION FROM UL
Documents
Document Sharing Hub
Full document details: UL 484 2005

11.1.20 Leads intended for connection to an external circuit shall be provided with strain relief if stress on the lead may be transmitted to terminals, splices, or internal wiring. Acceptability of the strain relief shall be determined in accordance with 7.6.

11.1.21 Leads provided for spliced connections to an external high-voltage circuit shall not be connected to wire binding screws or pressure wire connectors located in the same compartment as the splice unless the screws or connectors are rendered unusable for field-wiring connections or the leads are insulated at the unconnected ends.

11.2 Cord-connected units

11.2.1 A room air conditioner intended for cord connection to the power supply shall be equipped with a flexible cord having an equipment grounding conductor and with a grounding-type attachment plug.

11.2.1.1 A cord-connected single phase room air conditioner shall be provided with a factory installed LCDI or AFCI protection to reduce the risk of fire due to arcing faults in the power-supply cord. The LCDI or AFCI shall be installed as an integral part of the attachment plug or located in the supply cord within 300 mm (12 in.) of the attachment plug.

Added 11.2.1.1 effective August 1, 2004

11.2.1.2 Compliance with 11.2.1.1 shall be accomplished by the use of an integral protective device that de-energizes all current-carrying parts when arcing faults are detected within the power supply cord. The AFCI and LCDI shall comply with the Standard for Arc-Fault Circuit-Interrupters, UL 1699.

Added 11.2.1.2 effective August 1, 2004

11.2.2 The rating of the attachment plug shall not be less than 125 percent of the marked rating of the room air conditioner and not less than the total current measured during the Temperature and Pressure Test, Section 38, and the Temperature Test – Resistance Heat, Section 44. The total current shall include the current drawn by accessories intended for use with the room air conditioner.

11.2.3 A cord-connected air conditioner shall employ a grounding-type attachment plug that complies with the Standard for Wiring Devices-Dimensional Requirements, ANSI/NEMA WD6. See Table 11.2 for typical plugs used.

11.2.3 revised November 19, 2004

UL COPYRIGHTED MATERIAL –
NOT AUTHORIZED FOR FURTHER REPRODUCTION OR
DISTRIBUTION WITHOUT PERMISSION FROM UL

Documents
Document Sharing Hub

Full document details: UL 484 2005

Table 11.2
Attachment plugs

Table 11.2 revised November 19, 2004

Attachment Plug Rating		ANSI Designation
Amperes	Volts	
15	125	5–15P
20	125	5–20P
15	250	6–15P
20	250	6–20P
30	250	6–30P
50	250	6–50P

11.2.4 A cord-connected room air conditioner shall employ a Type S, SE, SEO, SEOO, SEW, SEOW, SEOOW, SO, SOO, SOW, SOOW, ST, STO, STOO, STW, STOW, STOOW, SJ, SJE, SJEO, SJEOO, SJEW, SJEOW, SJEOOW, SJO, SJOO, SJOW, SJOOW, SJT, SJTO, SJTOO, SJTW, SJTOW, SJTOOW, SP-3, SPE-3, or SPT-3 power supply cord having a voltage rating not less than that of the room air conditioner. The ampacity of the cord, as given in the National Electrical Code, ANSI/NFPA 70, shall be not less than that required by the ampere input measured in the Temperature and Pressure Test, 38, and the Temperature Test – Resistance Heat, 44. The ampere input value shall include the current drawn by accessories intended for use with the room air conditioner.

Exception: A power supply cord, other than the Types identified in 11.2.4, may be employed if it has comparable mechanical and electrical properties and the same voltage and ampacity as the cord Type it is replacing.

11.2.4 revised September 3, 2002

11.2.5 The length of a power supply cord shall be as follows:

Unit Rating		Cord length			
		Minimum		Maximum	
Volts	Amperes	feet	(m)	feet	(m)
0 – 125	7.5 or Less	6	(1.8)	10	(3)
0 – 125	7.6 or More	4	(1.2)	10	(3)
126 – 250	All	4	(1.2)	6	(1.8)

The length is to be measured between any point at which the cord exits the room air conditioner cabinet and the attachment plug.

Exception No. 1: For a room air conditioner intended only for in-wall installation, the length of the power supply cord shall be not less than 18 inches (457 mm).

Exception No. 2: Special purpose air conditioners may have a power supply cord of up to 20 feet (6 m) in length.

11.2.5 revised November 19, 2004

UL COPYRIGHTED MATERIAL –
NOT AUTHORIZED FOR FURTHER REPRODUCTION OR
DISTRIBUTION WITHOUT PERMISSION FROM UL
Documents
Document Sharing Hub
Full document details: UL 484 2005

11.2.6 The power supply cord shall be provided with strain relief means so that a stress on the cord will not be transmitted to terminals, splices, or internal wiring. If the strain relief is metallic, it shall not contact uninsulated live parts or reduce spacings within the enclosure if the cord is moved inward.

11.2.7 To determine the adequacy of the strain relief, a 35 pound (15.9 kg) weight is to be suspended on the cord and supported by the room air conditioner so that the strain relief means will be stressed from any angle which the design of the room air conditioner permits. The load is to be applied for 1 minute. The strain relief is not acceptable if there is such movement of the cord as to indicate that stress would have resulted on the cord connections.

11.2.8 The edges of the entry hole for the power supply cord, including the cord entry hole in a bushing, shall be rounded and without burrs, fins, or sharp edges which might damage the cord insulation. Within the unit, the power supply cord shall be routed to reduce the risk of damage to the cord insulation.

11.3 Grounding

11.3.1 A room air conditioner shall have provision for grounding as follows:

a) In a permanently connected room air conditioner, an equipment grounding terminal or lead; or

b) In a cord-connected room air conditioner, an equipment grounding conductor in the power supply cord.

11.3.2 On a permanently-connected room air conditioner, a terminal solely for connection of an equipment grounding conductor shall be capable of securing a conductor of the size required by the National Electrical Code, ANSI/NFPA 70.

11.3.2 revised September 3, 2002

11.3.3 A soldering lug, a push-in connector, a screwless connector, or a quick-connect or similar friction fit connector shall not be used for a terminal intended for the connection of a field-installed grounding conductor or for connection of the grounding wire in a power supply cord.

11.3.3 revised November 12, 1993

11.3.4 On a permanently-connected room air conditioner, a wire binding screw intended for the connection of an equipment grounding conductor shall have a green-colored head that is hexagonal, slotted, or both. Except as indicated in 11.3.5, a pressure wire connector intended for connection of such a conductor shall be plainly identified such as by being marked G, GR, GROUND, or GROUNDING, or by a marking on a wiring diagram provided on the room air conditioner. The wire binding screw or pressure wire connector shall be secured to the frame or enclosure of the room air conditioner and shall be located so that it is unlikely to be removed during service operations, such as replacing fuses, resetting manual-reset devices, or oiling motors.

11.3.5 If a pressure wire connector intended for grounding is located adjacent to connectors intended for supply conductors involving the neutral conductor of a grounded supply, it shall be identified by a marking EQUIPMENT GROUND, by a green color, or by both.

UL COPYRIGHTED MATERIAL –
NOT AUTHORIZED FOR FURTHER REPRODUCTION OR
DISTRIBUTION WITHOUT PERMISSION FROM UL
Documents
Document Sharing Hub
Full document details: UL 484 2005

11.3.6 On a permanently-connected room air conditioner, the surface of an insulated lead intended solely for the connection of an equipment grounding conductor shall be finished in a continuous green color or a continuous green color with one or more yellow stripes, and no other lead shall be so identified.

11.3.7 On a cord-connected room air conditioner, the grounding conductor of the power supply cord shall be finished with a continuous green color or with a continuous green color with one or more yellow stripes, and no other conductor shall be so identified. The grounding conductor shall be secured to the frame or enclosure of the room air conditioner by a positive means, such as clamping, bolting, or screw connection, that is not likely to be removed during any servicing operation not involving the power supply cord. The grounding conductor shall be connected to the grounding blade of the attachment plug.

12 Internal Wiring

12.1 General

12.1.1 Wiring shall have insulation rated for the potential involved and the temperatures to which it may be subjected. Compliance is to be judged on the basis of the temperatures measured during the applicable temperature tests specified in Sections 38, 43, and 44.

Exception: If it can be determined that the wiring will not be exposed to heat from radiating sources or heated components, and if the ampacity of the conductors is in accordance with Table 12.1 and 12.2, the temperature tests on the wiring may be waived.

12.1.2 With reference to the exception in 12.1.1, high-voltage circuit conductors supplying one motor shall have an ampacity not less than 125 percent of the motor full load current rating. Conductors supplying more than one motor shall have an ampacity not less than 125 percent of the full load current rating of the largest motor plus the full load current rating of any other motors supplied. Conductors supplying a motor load and other loads shall have any ampacity not less than 125 percent of the motor full load current rating plus the marked current ratings or measured inputs of the additional loads supplied.

12.1.3 Wiring which is color-coded green or green with one or more yellow stripes shall be used only for grounding conductors. Wiring used for other purposes shall not be identified with the above color codes.

12.1.4 Deleted November 19, 2004.

UL COPYRIGHTED MATERIAL –
NOT AUTHORIZED FOR FURTHER REPRODUCTION OR
DISTRIBUTION WITHOUT PERMISSION FROM UL
Documents
Document Sharing Hub
Full document details: UL 484 2005

12.2 High-voltage circuits

12.2.1 Internal wiring shall be of the type indicated in Table 12.1. The insulation of wires or cords connected to fan motors and other auxiliary motors shall be of an oil resistant type, such as Type SJO, SJT, SPT-3, or appliance wiring materials having oil resistant insulation.

Table 12.1
Typical wiring materials

Table 12.1 revised November 19, 2004

Group	Type of wire cord, or cable[a]	Wire size AWG	Wire size (mm^2)	Insulation thickness Inch	Insulation thickness (mm)
A	Thermoplastic appliance wiring material, with insulation thicknesses shown at the right corresponding to wire sizes indicated; or Type AC, ACL, ACT, RF-2, FF-2, FFH-2, TF, TFF, TFN, TFFN, SF-2, SFF-2, RH, RHH, RHW, THW, XHHW, MTW, THW-MTW, THWN, PF, PGF, PFF, PGFF, TW	10 and smaller	(5.3)	2/64	(0.8)
		8	(8.4)	3/64	(1.2)
		6	(13.3)	4/64	(1.6)
		4	(21.2)	4/64	(1.6)
		3	(26.7)	4/64	(1.6)
		2	(33.6)	4/64	(1.6)
B	Appliance wiring material[a] having thermoplastic, rubber, or neoprene insulation, with insulation thicknesses shown at right corresponding to the wire sizes indicated; or cord Types S, SE, SO, SOO, ST, STO, STOO, SJ, SJE, SJO, SJOO, SJT, SJTO, SJTOO, SP-3, SPE-3, SPT-3	18	(0.82)	4/64	(1.6)
		16	(1.3)	4/64	(1.6)
		14	(2.1)	5/64	(2.0)
		12	(3.3)	5/64	(2.0)
		10	(5.3)	5/64	(2.0)
		8	(8.4)	6/64	(2.4)
		6	(13.3)	8/64	(3.2)
		4	(21.2)	9/64	(3.6)
		2	(33.6)	10/64	(4.0)

[a] Appliance wiring material acceptable for refrigeration use.

12.2.2 Wiring of the type indicated in Group A of Table 12.1, shall be enclosed in conduit, electrical metallic tubing, metal raceways, control boxes, or the like. Fittings shall be constructed for use with the type of wiring enclosure employed in the application.

Exception: Neoprene or thermoplastic insulated wiring material in Group A of Table 12.1 need not be enclosed as indicated above, if all of the following conditions are met:

a) Wiring is not subject to movement by air or vibration. See 12.4.1;

b) Where practicable, individual leads are bunched together to form a cable;

c) Wiring is secured to fixed panels or other surfaces at intervals to assure proper routing and to reduce the likelihood of hooking of slack during routine service, such as replacing air filters, operating reset mechanisms, oiling motors, replacing fuses, adjusting the settings of controls, or the like;

d) Wiring is located in a compartment which is provided with a complete base pan or similar bottom closure;

UL COPYRIGHTED MATERIAL –
NOT AUTHORIZED FOR FURTHER REPRODUCTION OR
DISTRIBUTION WITHOUT PERMISSION FROM UL
Documents
Document Sharing Hub
Full document details: UL 484 2005

e) Wiring cannot be contacted through openings in the outer enclosure or cabinet by the probe illustrated in Figure 6.2; and

f) Wiring is not located in a compartment where plumbing connections are made at the point of installation.

12.2.3 Cords or appliance wiring material of a type indicated in Group B of Table 12.1, may be employed if the wiring is enclosed by the cabinet to reduce the risk of damage to the wiring, ignition of flammable material, or emission of flame or molten metal through openings in the cabinet.

12.2.4 Parallel conductor appliance wiring material of the integral type shall not be ripped more than 3 inches (76.2 mm) unless the thickness of conductor insulation after ripping is at least 0.058 inch (1.47 mm). If the material has conductor insulation not less than 0.028 inch (0.71 mm) after ripping and is within a separate metal enclosure, conduit, electrical metallic tubing, or metal raceway, the length of rip is not limited.

Table 12.2
Wiring materials ampacities

Table 12.2 revised November 19, 2004

Wire size		
mm^2	**AWG**	**Ampacity**
0.41	22	4
0.66	20	7
0.82	18	10
1.3	16	13
2.1	14	18
3.3	12	25
5.3	10	30
8.4	8	40
13.3	6	55
21.2	4	70
33.6	2	95
42.4	1	110

NOTE – The ampacities shown apply to appliance wiring materials. For types of wires other than appliance wiring materials, the ampacity shall be determined from Table 310-16 and 310-17 in the National Electric Code, ANSI/NFPA 70, for the type of wire employed. The correction factors of the referenced tables need not be applied.

UL COPYRIGHTED MATERIAL –
NOT AUTHORIZED FOR FURTHER REPRODUCTION OR
DISTRIBUTION WITHOUT PERMISSION FROM UL

Documents
Document Sharing Hub

Full document details: UL 484 2005