UL 506

ISBN 0-7629-0474-7

Specialty Transformers

Documents
Document Sharing Hub

Full document details: UL 498 1999

Documents
Document Sharing Hub

Full document details: UL 498 1999

Underwriters Laboratories Inc. (UL)
333 Pfingsten Road
Northbrook, IL 60062-2096

UL Standard for Safety for Specialty Transformers, UL 506

Twelfth Edition, Dated May 15, 2000

UL is in the process of converting its Standards for Safety to the Standard Generalized Markup Language (SGML), and implementing an SGML compliant document management and publishing system. SGML - an international standard (ISO 8879-1986) - is a descriptive markup language that describes a document's structure and purpose, rather than its physical appearance on a page. Significant benefits that will result from UL's use of SGML and these new systems include increased productivity, reduced turnaround times, and data and information consistency, reusability, shareability, and portability. However, the fonts, pagination, and general formatting of UL's new electronic publishing system differ from that of UL's previous publishing system. Consequently, when revision pages are issued for a Standard with the new publishing system, these differences may result in the printing of pages on which no requirements have been changed - these additional pages result from relocation of text due to repagination and reformatting of the Standard with the new publishing system.

As indicated on the title page (page1), this UL Standard for Safety has been adopted by the Department of Defense.

The master for this Standard at UL's Northbrook Office is the official document insofar as it relates to a UL service and the compliance of a product with respect to the requirements for that product and service, or if there are questions regarding the accuracy of this Standard.

UL's Standards for Safety are copyrighted by UL. Neither a printed copy of a Standard, nor the distribution diskette for a Standard-on-Diskette and the file for the Standard on the distribution diskette should be altered in any way. All of UL's Standards and all copyrights, ownerships, and rights regarding those Standards shall remain the sole and exclusive property of UL.

All rights reserved. No part of this publication may be reproduced, stored in a retrieval system, or transmitted in any form by any means, electronic, mechanical photocopying, recording, or otherwise without prior permission of UL.

Revisions of UL Standards for Safety are issued from time to time. A UL Standard for Safety is current only if it incorporates the most recently adopted revisions.

UL provides this Standard ″as is″ without warranty of any kind, either expressed or implied, including but not limited to, the implied warranties of merchantability or fitness for any purpose.

In no event will UL be liable for any special, incidental, consequential, indirect or similar damages, including loss of profits, lost savings, loss of data, or any other damages arising out of the use of or the inability to use this Standard, even if UL or an authorized UL representative has been advised of the possibility of such damage. In no event shall UL's liability for any damage ever exceed the price paid for this Standard, regardless of the form of the claim.

UL will attempt to answer support requests concerning electronic versions of its Standards. However, this support service is offered on a reasonable efforts basis only, and UL may not be able to resolve every support request. UL supports the electronic versions of its Standards only if they are used under the conditions and operating systems for which it is intended. UL's support policies may change from time-to-time without notification.

Documents
Document Sharing Hub

Full document details: UL 498 1999

UL reserves the right to change the format, presentation, file types and formats, delivery methods and formats, and the like of both its printed and electronic Standards without prior notice.

Purchasers of the electronic versions of UL's Standards for Safety agree to defend, indemnify, and hold UL harmless from and against any loss, expense, liability, damage, claim, or judgement (including reasonable attorney's fees) resulting from any error or deviation introduced while purchaser is storing an electronic Standard on the purchaser's computer system.

If a single-user version electronic Standard was purchased, one copy of this Standard may be stored on the hard disk of a single personal computer, or on a single LAN file-server or the permanent storage device of a multiple-user computer in such a manner that this Standard may only be accessed by one user at a time and for which there is no possibility of multiple concurrent access.

If a multiple-user version electronic Standard was purchased, one copy of the Standard may be stored on a single LAN file-server, or on the permanent storage device of a multiple-user computer, or on an Intranet server. The number of concurrent users shall not exceed the number of users authorized.

Electronic Standards are intended for on-line use, such as for viewing the requirements of a Standard, conducting a word search, and the like. Only one copy of the Standard may be printed from each single-user version of an electronic Standard. Only one copy of the Standard may be printed for each authorized user of a multiple-user version of an electronic Standard. Because of differences in the computer/software/printer setup used by UL and those of electronic Standards purchasers, the printed copy obtained by a purchaser may not look exactly like the on-line screen view or the printed Standard.

An employee of an organization purchasing a UL Standard can make a copy of the page or pages being viewed for their own fair and/or practical internal use.

The requirements in this Standard are now in effect, except for those paragraphs, sections, tables, figures, and/or other elements of the Standard having future effective dates as indicated in the note following the affected item. The prior text for requirements that have been revised and that have a future effective date are located after the Standard, and are preceded by a ″SUPERSEDED REQUIREMENTS″ notice.

New product submittals made prior to a specified future effective date will be judged under all of the requirements in this Standard including those requirements with a specified future effective date, unless the applicant specifically requests that the product be judged under the current requirements. However, if the applicant elects this option, it should be noted that compliance with all the requirements in this Standard will be required as a condition of continued Listing, Recognition, and Follow-Up Services after the effective date, and understanding of this should be signified in writing.

Copyright © 2000 Underwriters Laboratories Inc.

This Standard consists of pages dated as shown in the following checklist:

Page Date

1-68 . . . . . May 15, 2000
A1-A2 . . . . . May 15, 2000
SR1-SR20 . . . . . May 15, 2000

Documents
Document Sharing Hub

Full document details: UL 498 1999

UL 506

Standard for Specialty Transformers

First Edition – November, 1921
Second Edition – June, 1931
Third Edition – June, 1940
Fourth Edition – October, 1952
Fifth Edition – December, 1967
Sixth Edition – May, 1973
Seventh Edition – May, 1973
Eighth Edition – July, 1977
Ninth Edition – December, 1979
Tenth Edition – December, 1989
Eleventh Edition – July, 1994

Twelfth Edition

May 15, 2000

An effective date included as a note immediately following certain requirements is one established by Underwriters Laboratories Inc.

The Department of Defense (DoD) has adopted UL 506 on December 22, 1989. The publication of revised pages or a new edition of this Standard will not invalidate the DoD adoption.

Revisions of this Standard will be made by issuing revised or additional pages bearing their date of issue. A UL Standard is current only if it incorporates the most recently adopted revisions, all of which are itemized on the transmittal notice that accompanies the latest set of revised requirements.

ISBN 0-7629-0474-7

COPYRIGHT © 1977, 2000 UNDERWRITERS LABORATORIES INC.

Documents
Document Sharing Hub

Full document details: UL 498 1999

No Text on This Page

Documents
Document Sharing Hub

Full document details: UL 498 1999

CONTENTS

FOREWORD 8

INTRODUCTION

1 Scope 9
2 General 10
2.1 Components 10
2.2 Units of measurement 10
2.3 Undated references 10
3 Glossary 11

ALL TRANSFORMERS

CONSTRUCTION

4 Mechanical Assembly 11
5 Enclosure 11
6 Corrosion Resistance 13
7 Wiring Terminals 14
8 Leads – Including Flexible Cords 14
9 Internal Wiring 15
10 Bushings for Low Voltage Wiring – Nominal 600 Volts or Less 15
11 Insulating Material for Mounting Low-Voltage Live Parts – Nominal 600 Volts or Less 16
12 Coil Insulation 16
13 Wiring Devices 16

PERFORMANCE

14 General 17
15 Temperature Test 17
16 Pullout, Bending, and Twisting Tests 18

MARKINGS

17 Details 19

GENERAL-PURPOSE TRANSFORMERS AND REACTORS

GENERAL

18 Details 19

CONSTRUCTION

19 Mechanical Assembly 19
20 Enclosure 19
20.1 General 19
20.2 Nonmetallic enclosures 20
20.3 Mounting means 20
20.4 Enclosures – specific environmental conditions 21

Documents
Document Sharing Hub

Full document details: UL 498 1999

21 Corrosion Resistance 23
22 Current-Carrying Parts 25
23 Connections 27
23.1 General 27
23.2 Leads 27
23.3 Splice compartment 28
23.4 Wire-binding screws and studs 28
23.5 Pressure terminal connectors 29
23.6 Wiring compartment 30
23.7 Wire-bending space 30
24 Spacings and Insulation Used in Lieu of Spacings 34

PERFORMANCE

25 General 38
26 Voltage Measurement Test 38
27 Impedance Test 38
28 Heating Test 39
29 Dielectric Voltage-Withstand Test 41
29.1 Applied potential 41
29.2 Induced potential 41
29.3 Insulating barriers 42
30 Overload Test 42
31 Dielectric Voltage-Withstand Test Repeated 43
32 Lifting or Mounting Means Test 43
33 Compression Test 44
34 Metallic Coating Thickness Test 44
35 Drip Test 45
36 Icing Test 46
37 Rust Resistance Test 46
38 Water Spray Test 46
39 Strain Relief Test 49
40 Accelerated Aging of Gaskets Test 49

MANUFACTURING AND PRODUCTION TEST

41 Production Line Dielectric Voltage-Withstand Test 49

RATINGS

42 Details 51

MARKINGS

43 Details 51
43.1 General 51
43.2 Environmental condition enclosures 52
43.3 Wiring 53

Documents
Document Sharing Hub
Full document details: UL 498 1999

GAS-TUBE-SIGN TRANSFORMERS

GENERAL

44 Details 55

CONSTRUCTION

45 General 55
46 Enclosure 55
47 Insulating Materials 55
48 Connections 55
49 Spacings 55
50 Guarding of Live Parts and Grounding 56
51 Capacitors 56

PERFORMANCE

52 General 56
53 Open-Circuit Secondary Voltage Test 56
54 Input Test 56
55 Heating Test 56
56 Short-Circuit Secondary Current Test 56
57 Dielectric Voltage-Withstand Test 56
58 Burnout Test 56
59 Open-Circuit Secondary Operation Test 56
60 Switch Tests 56

TEST BY THE MANUFACTURER

61 Production Line Grounding Continuity Test 57

RATINGS

62 Details 57

MARKINGS

63 Details 57

IGNITION TRANSFORMERS

GENERAL

64 Details 57

CONSTRUCTION

65 General 58
66 Enclosure 58
67 Primary Connections 59
68 Secondary Terminals 61
69 Spacings 61

Documents
Document Sharing Hub
Full document details: UL 498 1999

70 Grounding 62
71 Capacitors 62

PERFORMANCE

72 General 62
73 Open-Circuit Secondary Voltage Test 62
74 Input Test 64
75 Interchangeability Test 64
76 Heating Test 65
77 Dielectric Voltage-Withstand Test 66
78 Short-Circuit Operation Test 67

RATINGS

79 Details 67

MARKINGS

80 Details 68

APPENDIX A

Standards for Components. A1

Documents
Document Sharing Hub

Full document details: UL 498 1999

No Text on This Page

Documents
Document Sharing Hub

Full document details: UL 498 1999

FOREWORD

A. This Standard contains basic requirements for products covered by Underwriters Laboratories Inc. (UL) under its Follow-Up Service for this category within the limitations given below and in the Scope section of this Standard. These requirements are based upon sound engineering principles, research, records of tests and field experience, and an appreciation of the problems of manufacture, installation, and use derived from consultation with and information obtained from manufacturers, users, inspection authorities, and others having specialized experience. They are subject to revision as further experience and investigation may show is necessary or desirable.

B. The observance of the requirements of this Standard by a manufacturer is one of the conditions of the continued coverage of the manufacturer's product.

C. A product which complies with the text of this Standard will not necessarily be judged to comply with the Standard if, when examined and tested, it is found to have other features which impair the level of safety contemplated by these requirements.

D. A product employing materials or having forms of construction which conflict with specific requirements of the Standard cannot be judged to comply with the Standard. A product employing materials or having forms of construction not addressed by this Standard may be examined and tested according to the intent of the requirements and, if found to meet the intent of this Standard, may be judged to comply with the Standard.

E. UL, in performing its functions in accordance with its objectives, does not assume or undertake to discharge any responsibility of the manufacturer or any other party. The opinions and findings of UL represent its professional judgment given with due consideration to the necessary limitations of practical operation and state of the art at the time the Standard is processed. UL shall not be responsible to anyone for the use of or reliance upon this Standard by anyone. UL shall not incur any obligation or liability for damages, including consequential damages, arising out of or in connection with the use, interpretation of, or reliance upon this Standard.

F. Many tests required by the Standards of UL are inherently hazardous and adequate safeguards for personnel and property shall be employed in conducting such tests.

Documents
Document Sharing Hub
Full document details: UL 498 1999

INTRODUCTION

1 Scope

1.1 These requirements cover air-cooled transformers and reactors for general use, and ignition transformers for use with gas burners and oil burners. Transformers incorporating overcurrent or over-temperature protective devices, transient voltage surge protectors, or power factor correction capacitors are also covered by these requirements. These transformers are intended to be used in accordance with the National Electrical Code, NFPA 70.

Revised 1.1 effective November 1, 2002

1.2 These requirements do not cover liquid-immersed transformers, variable voltage autotransformers, transformers having a nominal primary rating of more than 600 volts, transformers having overvoltage taps rated over 660 volts, cord and plug connected transformers (other than gas-tube-sign transformers), garden light transformers, voltage regulators, swimming pool and spa transformers, or other special types of transformers covered in requirements for other electrical devices or appliances.

1.3 These requirements do not cover:

a) Autotransformers used in industrial control equipment, which are evaluated in accordance with the Standard for Industrial Control Equipment, UL 508.

b) Class 2 or Class 3 transformers, which are evaluated in accordance with the Standard for Class 2 and Class 3 Transformers, UL 1585.

c) Toy transformers, which are evaluated in accordance with the Standard for Toy Transformers, UL 697.

d) Transformers for use with radio- and television-type appliances, which are evaluated in accordance with the Standard for Transformers and Motor Transformers for Use in Audio-, Radio-, and Television-Type Appliances, UL 1411.

e) Transformers for use with high intensity discharge lamps, which are evaluated in accordance with the Standard for High-Intensity-Discharge Lamp Ballasts, UL 1029.

f) Transformers for use with fluorescent lamps, which are evaluated in accordance with the Standard for Fluorescent-Lamp Ballasts, UL 935.

g) Ventilated transformers for general use or non-ventilated transformers for general use (other than compound filled or exposed core types), which are evaluated in accordance with the Standard for Dry-Type General Purpose and Power Transformers, UL 1561.

h) Dry-type distribution transformers rated over 600 volts, which are evaluated in accordance with the Standard for Transformers, Distribution, Dry-Type – Over 600 Volts, UL 1562.

i) Transformers incorporating rectifying or waveshaping circuitry evaluated in accordance with the Standard for Power Units Other Than Class 2, UL 1012.

j) Transformers of the direct plug-in type evaluated in accordance with the Standard for Class 2 Power Units, UL 1310.

Documents
Document Sharing Hub
Full document details: UL 498 1999

k) Transformers for use with electric discharge and neon tubing, which are evaluated in accordance with the Standard for Neon Transformers and Power Supplies, UL 2161.

Revised 1.3 effective November 1, 2002

1.4 A product that contains features, characteristics, components, materials, or systems new or different from those covered by the requirements in this standard, and that involves a risk of fire or of electric shock or injury to persons shall be evaluated using appropriate additional component and end-product requirements to maintain the level of safety as originally anticipated by the intent of this standard. A product whose features, characteristics, components, materials, or systems conflict with specific requirements or provisions of this standard does not comply with this standard. Revision of requirements shall be proposed and adopted in conformance with the methods employed for development, revision, and implementation of this standard.

2 General

2.1 Components

2.1.1 Except as indicated in 2.1.2, a component of a product covered by this standard shall comply with the requirements for that component. See Appendix A for a list of standards covering components generally used in the products covered by this standard.

2.1.2 A component is not required to comply with a specific requirement that:

a) Involves a feature or characteristic not required in the application of the component in the product covered by this standard, or

b) Is superseded by a requirement in this standard.

2.1.3 A component shall be used in accordance with its rating established for the intended conditions of use.

2.1.4 Specific components are incomplete in construction features or restricted in performance capabilities. Such components are intended for use only under limited conditions, such as certain temperatures not exceeding specified limits, and shall be used only under those specific conditions.

2.2 Units of measurement

2.2.1 When a value for measurement is followed by a value in other units in parentheses, the first stated value is the requirement.

2.2.2 Unless otherwise indicated, all voltage and current values mentioned in this standard are root-mean-square (rms).

2.3 Undated references

2.3.1 Any undated reference to a code or standard appearing in the requirements of this standard shall be interpreted as referring to the latest edition of that code or standard.

Documents
Document Sharing Hub
Full document details: UL 498 1999

3 Glossary

3.1 For the purpose of this standard, the following definitions apply.

3.2 COMPOUND-FILLED TRANSFORMER – A transformer in which the windings are enclosed with an insulating fluid that becomes solid, or remains plastic, at intended operating temperatures.

3.3 ENCAPSULATED COIL – A coil that is enclosed with an insulating fluid that becomes solid.

3.4 EXPOSED CORE TRANSFORMER – A transformer with exposed core lamination.

3.5 INDUSTRIAL CONTROL TRANSFORMER – A step-down transformer of the open-core and coil-type that may be provided with a fuse or other overcurrent protective device and that generally is used for the operation of solenoids, contactors, and relays as a control function (such as in heating and air conditioning, printing, and general industrial controls).

3.6 NONVENTILATED DRY-TYPE TRANSFORMER – A dry-type transformer other than of the compound-filled or exposed core-type that is constructed so as to provide no intentional circulation of ambient air through the transformer and is intended to operate at normal ambient room air pressure.

3.7 VENTILATED DRY-TYPE TRANSFORMER – A dry-type transformer that is constructed so that ambient air may circulate through the enclosure to cool the transformer core and windings.

3.8 WINDING – A continuous conductor made up of a number of turns magnetically coupled to a magnetic core, to which a voltage is either applied or induced. Two or more such conductors that are permanently factory connected together to form intermediate voltage taps, current taps, or the like are considered to be a single winding. The winding can consist of single or parallel-wound conductors.

ALL TRANSFORMERS

CONSTRUCTION

4 Mechanical Assembly

4.1 A transformer shall be formed and assembled so that it will have the strength and rigidity necessary to resist the abuses to which it is likely to be subjected. A risk of fire, electric shock, or injury to persons shall not result from a reduction of spacings, loosening or displacement of parts, or other serious defect due to total or partial collapse of the transformer.

5 Enclosure

5.1 In addition to the overall enclosure, the requirements in 5.2 – 5.15 apply to those portions of an enclosure surrounding a terminal or wiring compartment.

5.2 A sheet steel enclosure shall be formed from stock having a thickness of not less than 0.026 inch (0.66 mm) if uncoated or not less than 0.029 inch (0.74 mm) if zinc coated.

Exception: Sheet steel having a thickness of not less than 0.020 inch (0.51 mm) if uncoated or not less than 0.023 inch (0.58 mm) if zinc coated may be used for drawn end bells having a maximum width or length of 2-1/4 inches (57.2 mm) on the flat portion and 1-1/2 inches (38.1 mm) at the base of the drawn portion. Figure 5.1 illustrates these portions of an end bell.

Documents
Document Sharing Hub
Full document details: UL 498 1999

Figure 5.1
End bell

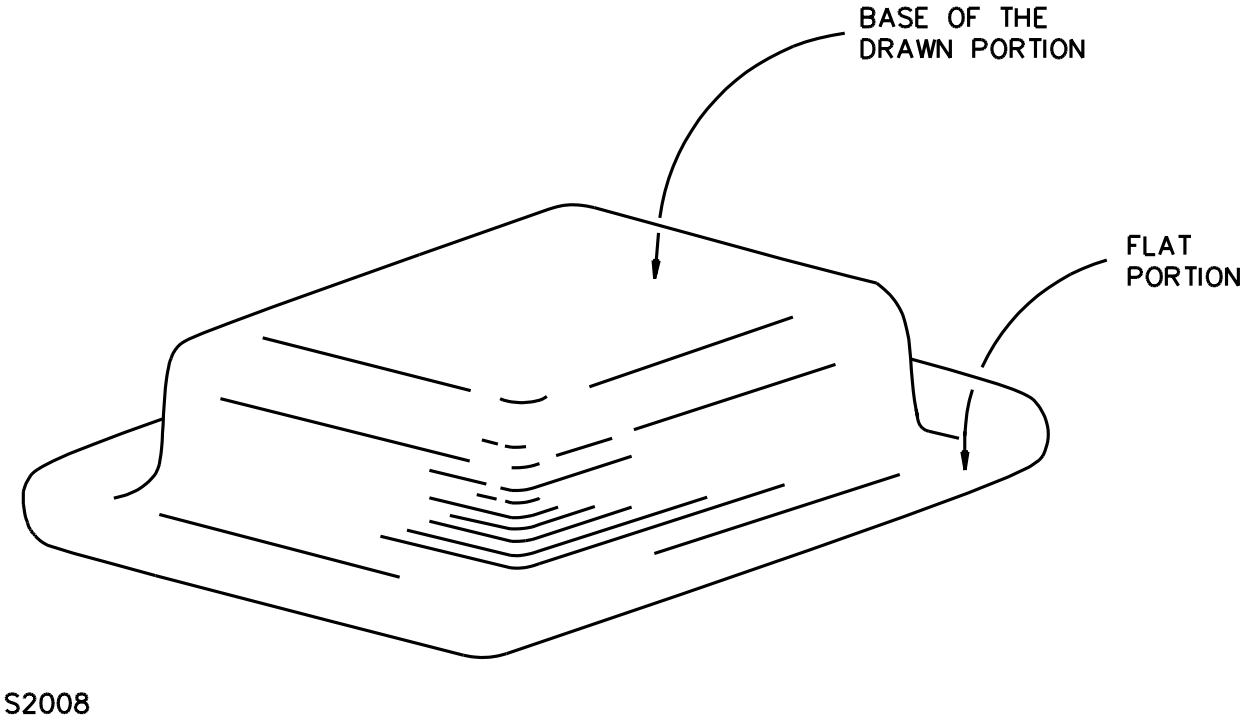

5.3 A sheet aluminum enclosure shall be formed from stock having a thickness of not less than 0.040 inch (1.02 mm).

5.4 The thickness of a sheet steel enclosure is determined by taking the numerical average of five micrometer readings equally spaced across the full width of the sheet as rolled.

5.5 The thickness of an enclosure of nonferrous sheet metal shall provide strength and rigidity not less than that of an enclosure of sheet steel as described in 5.2.

5.6 A cast iron enclosure shall not be less than 1/8 inch (3.2 mm) thick at any point and of greater thickness at reinforcing ribs and edges of doors or covers.

5.7 A cast iron enclosure shall not be less than 1/4 inch (6.4 mm) thick at tapped holes for conduit.

5.8 If threads for the connection of conduit are tapped all the way through a hole in a transformer enclosure, or if an equivalent construction is used, there shall not be less than 3-1/2 or more than 5 threads in the metal. The construction shall enable the secure attachment of a standard conduit bushing.

5.9 If threads for the connection of conduit are tapped only part of the way through a hole in the enclosure, there shall not be less than 5 full threads in the metal. There shall be a smooth, well-rounded inlet hole to provide a passage equivalent to that provided by a standard conduit bushing.

5.10 A transformer intended to be supported by rigid metal conduit shall have conduit hubs with not less than 5 full threads or other equivalent supporting means of such strength that these parts would comply with the requirements specified in the Pullout, Bending, and Twisting Tests, Section 16.

Documents
Document Sharing Hub
Full document details: UL 498 1999

5.11 A knockout for the connection of conduit to a wiring compartment of a transformer shall be constructed in accordance with Table 5.1.

Table 5.1
Dimensions of conduit bushings and diameter of knockouts and widths of flat surrounding surfaces

Trade size of conduit, inches	Bushings				Knockout diameter				Minimum width of flat surrounding surface,	
	Overall diameter,		Height,		Minimum,		Maximum,			
	inches	(mm)	inches	(mm)	inches	(mm)	inches	(mm)	inch	(mm)
1/2	1	25.4	3/8	9.5	0.859	21.82	0.906	23.01	0.13	3.4
3/4	1-15/64	31.4	27/64	10.7	1.094	27.79	1.141	29.98	0.16	4.1
1	1-19/32	40.5	33/64	13.1	1.359	34.52	1.406	35.71	0.20	5.0
1-1/4	1-15/16	49	9/16	14.3	1.719	43.66	1.766	44.86	0.27	7.0
1-1/2	2-13/64	56	19/32	15.1	1.969	50.01	2.016	51.21	0.31	7.8
2	2-45/64	68.7	5/8	15.9	2.453	62.31	2.50	63.50	0.36	9.2
2-1/2	3-7/32	81.8	3/4	19.1	2.953	75.01	3.00	76.20	0.30	7.8
3	3-7/8	98.4	13/16	20.6	3.578	90.88	3.625	92.08	0.33	8.3
3-1/2	4-7/16	113	15/16	23.8	4.094	103	4.156	105	0.34	8.6
4	4-31/32	126	1	25.4	4.609	117	4.672	118	0.38	9.7
5	6-7/32	158	1-3/16	30.2	5.688	144	5.750	146	0.48	12.2
6	7-7/32	183	1-1/4	31.8	6.781	172	6.844	173	0.56	14.2

5.12 There shall be space provided within a terminal or wiring compartment for a standard conduit bushing to be mounted on rigid metal conduit connected to the compartment.

5.13 Wires within an enclosure, compartment, raceway, or the like shall be located or guarded to reduce the risk of contact with any sharp edge, burr, fin, or moving part, that may cause damage to the conductor insulation.

5.14 Wiring space or other compartments provided for field wiring shall be free of any sharp edge, burr, fin, moving part, or sharp point of a sheet metal screw that may cause damage to the conductor insulation or cause a cut-type injury.

5.15 An edge, projection, or corner of an enclosure, opening, frame, guard, knob, or handle of a device shall be smooth and rounded and not sharp to cause a cut-type injury when contacted during intended use or maintenance.

6 Corrosion Resistance

6.1 The internal and external surfaces of an enclosure of iron or steel, other than stainless steel, shall be corrosion resistant. Examples of corrosion resistance means that comply with these requirements are galvanizing, plating, and enameling.

Exception No. 1: An interior surface covered by compound need not be additionally resistant to corrosion.

Exception No. 2: A Type 1 or Type 2 enclosure need not be additionally resistant to corrosion if it complies with the rust resistance test described in the Rust Resistance Test, Section 37.

Documents
Document Sharing Hub
Full document details: UL 498 1999

7 Wiring Terminals

7.1 For these requirements, wiring terminals are those to which connections are made in the field when a transformer is installed.

7.2 When a transformer is intended for mounting on an outlet box, wiring terminals that will be inside the box after the transformer is installed shall be located or recessed so that contact between these terminals and wires would be unlikely after the transformer is installed.

8 Leads – Including Flexible Cords

8.1 The connection between a lead, including a flexible cord, and the winding or other part of the transformer shall be soldered, welded, or otherwise securely connected within the enclosure. A soldered joint shall be made mechanically secure before being soldered.

8.2 When a lead is rigidly held in place without the use of solder or if it is intended to be retained in place by compound or other means so as not to be subjected to appreciable motion, additional mechanical security shall not be required.

8.3 Strain relief shall be provided so that stress on a lead, including a flexible cord, will not be transmitted to the connection inside the transformer.

8.4 A strain relief means shall not depend solely on adhesion between the conductor and an asphalt-type compound. When epoxy- and polyester-type compounds are used for strain relief, the construction shall comply with the Strain Relief Test, Section 39.

8.5 The surface of an insulated lead intended for the connection of an equipment grounding conductor shall be green with or without one or more yellow stripes. No other lead shall be so identified.

8.6 Thermoplastic-insulated wire and flexible cord shall not be used for a transformer lead unless it has been investigated and determined to be acceptable for the application. The investigation is to normally include a consideration of the strain relief means used, as well as the effects of the varnishing and compounding operations of the insulation of the lead.

8.7 The types of flexible cord that may be used with an ignition transformer (Sections 64 – 80) are indicated in Table 8.1 from the lightest to the heaviest. Where these requirements specify any particular type of flexible cord, all of the heavier types following it in the table may also be used.

Revised 8.7 effective November 1, 2002

Documents
Document Sharing Hub

Full document details: UL 498 1999

Table 8.1
Types of cords

C
SP-2, SPE-2
SPT-2
PD
SV, SVE
SVO, SVOO
SVT
SVTO, SVTOO
SJ, SJE
SJO, SJOO
SJT
SJTO, SJTOO
S
SO, SOO
ST
STO, STOO

9 Internal Wiring

9.1 The internal wiring of a transformer shall be rated for the temperature and voltage to which it will be subjected.

9.2 A splice or connection shall be mechanically secure and shall provide electrical contact.

9.3 A splice shall be provided with insulation equivalent to that on the wires involved if necessary to maintain permanence of spacing between the splice and uninsulated live parts.

9.4 Aluminum conductors, insulated or uninsulated, used for internal interconnections between current-carrying parts shall be terminated at each end by a method that has been determined to be acceptable for the combination of metals at the connection points.

10 Bushings for Low Voltage Wiring – Nominal 600 Volts or Less

10.1 A bushing used in a transformer intended for outdoor use shall be of:

a) Porcelain,

b) Cold-molded or phenolic composition,

c) Fiber that has been treated to render it resistant to moisture, or

d) Other equivalent insulating material.

10.2 An untreated fiber bushing shall only be used in a transformer intended for indoor use.

10.3 A fiber bushing shall have a wall thickness of not less than 3/64 inch (1.2 mm) and shall be formed and secured in place so that it would not be adversely affected by conditions of moisture or intended use. A fiber plate not less than 1/32 inch (0.8 mm) thick, with a punched hole, may be used instead of a bushing when the cord or wire is rigidly held in position.

Documents
Document Sharing Hub
Full document details: UL 498 1999

10.4 Bushings of rubber, wood, or hot-molded shellac or tar compositions shall not be used.

10.5 A cord- or wire-entry hole in an enclosure, a partition, or bushing shall be smooth, well-rounded, and without burrs or fins that might damage the conductor insulation.

10.6 A bushing shall be securely held in place.

10.7 An insulating bushing is not required at a point where a low-voltage wire or cord passes through:

a) A hole in an interior metal wall or barrier,

b) A hole in insulating material,

c) A conduit nipple or hub, or

d) An armored cable connector or the equivalent.

An insulating bushing is not required where a Type SV or heavier flexible cord enters the enclosure of a transformer.

11 Insulating Material for Mounting Low-Voltage Live Parts – Nominal 600 Volts or Less

11.1 Material for the mounting of low voltage live parts shall be glass, porcelain, phenolic or cold-molded composition, or equivalent insulating material. Untreated fiber, rubber, wood, and hot-molded shellac or tar compositions shall not be used.

Exception: This requirement does not apply to material used for separators, spacers, coil supports, and similar parts within a transformer enclosure.

12 Coil Insulation

12.1 Coils shall be constructed to provide insulation between the various windings and between the windings and the core and the enclosure.

12.2 Coil insulation, unless inherently moisture-resistant, shall be treated to render it resistant to moisture.

12.3 Film-coated wire is not required to be additionally treated to reduce moisture absorption.

13 Wiring Devices

13.1 A switch or other wiring device shall be mounted so that it will not turn with regard to the mounting surface.

Documents
Document Sharing Hub
Full document details: UL 498 1999

PERFORMANCE

14 General

14.1 Unless otherwise specified, all tests are to be conducted at the supply voltages specified in Table 14.1.

Exception: When a transformer is provided with one or more primary voltage winding taps, the lowest rated full capacity tap is to be used. The test voltage applied to this tap is to be the rated tap voltage. When the voltage is expressed as a range, the highest voltage of the range is to be used.

Table 14.1
Values of test voltages

Rated primary voltage	Test voltage
Less than 110	Rated voltage[a]
110 – 120	120
Over 120 and less than 220	Rated voltage[a]
220 – 240	240
Over 240 and less than 254	Rated voltage[a]
254 – 277	277
Over 277 and less than 440	Rated voltage[a]
440 – 480	480
Over 480 and less than 550	Rated voltage[a]
550 – 600	600
Over 600 – 660	Rated voltage[a]

[a] If the rated voltage is expressed as a range, the maximum voltage of the range is to be used.

15 Temperature Test

15.1 Requirements relating to heating are based on an ambient air temperature of 25°C (77°F). A temperature test may be conducted at any ambient air temperature; however, the variation from 25°C shall be added to or subtracted from the observed temperature reading.

15.2 Other than in those cases where it is specifically stated that temperature determinations are to be made by the change-of-resistance method, temperatures are to be measured by means of thermocouples. A thermocouple-measured temperature is to be considered constant if three successive readings, taken at intervals of 10 percent of the previously elapsed duration of the test (but at not less than 5-minute intervals), indicate no change. The junction of the thermocouple is to be secured in contact with the point on the surface at which the temperature is to be measured. The thermocouple is to consist of wires not larger than No. 24 AWG (0.21 mm^2).

Exception No. 1: Where the thermocouple is used to measure temperatures of electrically live points, electrical insulation having a maximum thickness of 0.028 inch (0.71 mm) may be located between the thermocouple and the live points.

Exception No. 2: The coil temperature is to be determined by the change-of-resistance method.

Exception No. 3: The ambient temperature may be determined by a thermometer.

Documents
Document Sharing Hub
Full document details: UL 498 1999

15.3 When thermocouples are used in the determination of temperatures in connection with the heating of electrical devices, it is standard practice to use thermocouples consisting of No. 30 AWG (0.05 mm^2) iron and constantan wires and a potentiometer-type indicating instrument. Such equipment is to be used whenever referee temperature measurements are necessary. The thermocouple wire is to comply with the requirements for special thermocouples as specified in the Initial Calibration Tolerances for Thermocouples table in Temperature Measurement Thermocouples, ANSI/ISA MC96.1.

15.4 The temperature rise of a copper or aluminum winding is to be determined by the change-of-resistance method using the following formula (windings are to be at room temperature at the start of the test):

$$\Delta t = \frac{R}{r}(k + t_1) - (k + t_2)$$

in which:

Δt is the temperature rise,

R is the resistance of the coil at the end of the test,

r is the resistance of the coil at the beginning of the test,

k is 234.5 for copper and 225.0 for aluminum,

t_1 is the room temperature in degrees C at the beginning of the test, and

t_2 is the room temperature in degrees C at the end of the test.

16 Pullout, Bending, and Twisting Tests

16.1 Conduit and fixture connections of a transformer constructed for support by rigid metal conduit shall be subjected to:

a) A pull of 200 pounds-force (890 N),

b) A bending moment of 600 pound-inches (67.8 N·m), and

c) A torque of 600 pound-inches,

Each shall be applied in turn for 5 minutes. The connections shall not be pulled apart following this test.

16.2 When the pullout test is conducted, the transformer is to be supported by rigid metal conduit in the intended manner. The transformer is then to be caused to support a weight of 200 pounds (90 kg) or, if a fixture stud or similar fitting is provided, the weight is to be supported from rigid metal conduit or the equivalent threaded onto this fitting so that the stud and the conduit connection are tested simultaneously.

Documents
Document Sharing Hub
Full document details: UL 498 1999

16.3 When the bending and twisting tests are conducted, the transformer is to be rigidly supported by means other than the conduit fittings. In the bending test, the force is to be applied to the conduit at right angles to its axis. The lever arm is to be measured from the inner end of the threaded section, in a conduit-hub- or stud-type connection, to the point of application of the bending force.

16.4 In the torsion test, the torque is to be applied to the conduit in a direction tending to tighten the connection and the lever arm is to be measured from the center of the conduit.

MARKINGS

17 Details

17.1 If a manufacturer produces transformers of a particular type (for example, ignition transformers) at more than one factory, each finished transformer shall have a distinctive marking, which may be in code, by which it may be identified as the product of a particular factory.

GENERAL-PURPOSE TRANSFORMERS AND REACTORS

GENERAL

18 Details

18.1 The requirements in Sections 19 – 43 are considered additional to those specified in Sections 1 – 17, which apply to all types of transformers.

18.2 The requirements in Sections 19 – 43 apply to compound-filled transformers, exposed core transformers, or industrial control transformers.

18.3 The requirements in Sections 19 – 43 do not apply to ventilated transformers; nonventilated transformers other than of the compound-filled or exposed core type; transformers having either primary or secondary ratings, including elevated voltage use, of more than 600 volts nominal; or transformers having overvoltage taps rated greater than 660 volts.

CONSTRUCTION

19 Mechanical Assembly

19.1 A transformer weighing more than 100 pounds (45 kg) shall be provided with a means for lifting by a fork lift, cable, sling, or the equivalent. The lifting means may be provided on the transformer core or frame or the equivalent if the transformer has a removable top cover. The lifting means shall be subjected to the Lifting or Mounting Means Test, Section 32.

Exception: The lifting means test does not apply to a transformer that is intended to be lifted from underneath by a fork lift or other means.

20 Enclosure

20.1 General

20.1.1 A general purpose transformer or reactor shall be provided with an enclosure of moisture-resistant material. The enclosure shall house all uninsulated live parts.

Documents
Document Sharing Hub
Full document details: UL 498 1999

Exception No. 1: Terminals of a transformer intended for mounting on an outlet box need not be additionally enclosed if they will be enclosed within the box when the transformer is mounted.

Exception No. 2: An industrial control transformer as described in 20.1.2 need not be provided with an enclosure that houses all uninsulated live parts.

20.1.2 An industrial control transformer rated 5000 volt-amperes or less that is intended for use in industrial control equipment and is of the unenclosed core and coil construction, shall be insulated between the primary and secondary windings.

20.2 Nonmetallic enclosures

20.2.1 Among the factors that shall be taken into consideration when judging the acceptability of magnesium and nonmetallic material are resistance to:

a) Mechanical damage,

b) Impact,

c) Moisture absorption,

d) Combustion, and

e) Distortion at temperatures to which the material may be subjected under conditions of normal or abnormal use.

20.2.2 A polymeric material shall comply with the applicable requirements in the Standard for Polymeric Materials – Use in Electrical Equipment Evaluations, UL 746C.

20.3 Mounting means

20.3.1 An enclosure shall be provided with means for mounting. The mounting means shall be such that, when the enclosure is mounted on a plane surface, it will make contact with such surface at points of support only. When so mounted, there shall be a spacing through air of not less than 1/4 inch (6.4 mm) between the supporting surface and the enclosure.

Exception No. 1: There need not be a 1/4-inch spacing between the supporting surface and the enclosure if the transformer is intended to be mounted on an outlet box cover.

Exception No. 2: There need not be a 1/4-inch spacing between the supporting surface and the enclosure if the transformer is an industrial control transformer.

20.3.2 An unenclosed core and coil transformer shall be provided with mounting brackets or a mounting plate.

20.3.3 The means of securing a transformer to a wall shall be subjected to the Lifting or Mounting Means Test, Section 32.

20.3.4 A transformer rated 100 volt-amperes or less may be used for mounting on a standard outlet box in place of a cover. The transformer shall include an outlet box cover or similar item that has been determined to be the equivalent. The cover, if sheet steel, shall not be less than 0.045 inch (1.14 mm) thick if zinc coated and 0.042 inch (1.07 mm) thick if uncoated and shall be resistant to corrosion on all surfaces.

Documents
Document Sharing Hub
Full document details: UL 498 1999

20.3.5 The cover of an enclosure shall be provided with means (such as screws) for firmly securing it in place. Friction alone shall not be used.

20.3.6 A cover that must be removed for the connection of circuit conductors shall not be provided with means for the connection of conduit or armored cable.

20.3.7 The requirement in 20.3.6 does not preclude acceptability of a transformer mounted on an outlet box cover and provided with secondary leads brought out through a flexible conduit connector, if the volt-ampere and secondary voltage ratings are not more than 100 volt-amperes and 30 volts, respectively.

20.4 Enclosures – specific environmental conditions

20.4.1 An enclosure intended for a specific environmental condition and determined to be acceptable for such use, as specified in Table 20.1, shall be marked in accordance with 43.1.6. An enclosure that complies with the requirements for more than one type of enclosure may be marked accordingly with multiple type numbers.

20.4.2 An enclosure shall be subjected to the tests specified in Table 20.1 and shall comply with the construction requirements applicable to an enclosure of the type number or numbers with which it is marked.

Table 20.1
Enclosure types

Type number	Intended use and description	Required tests
Type 1	Indoor use primarily to provide protection against contact with the enclosed equipment and against a limited amount of falling dirt	Corrosion Resistance, Section 6, or Rust Resistance, Section 37
Type 2	Indoor use to provide a degree of protection against limited amounts of falling water and dirt	Corrosion Resistance, Section 6, and Drip, Section 35; or Drip, Section 35, and Rust Resistance, Section 37
Type 3R	Outdoor use to provide a degree of protection against falling rain; undamaged by the formation of ice on the enclosure	Corrosion Resistance, Section 21; Icing, Section 36[a]; and Water Spray, Section 38

[a] The icing test is not required if the transformer has no external cavities that can trap water.

20.4.3 The thickness of a sheet metal enclosure shall comply with the following:

a) Table 20.2 for an enclosure without a supporting frame,

b) The requirements in 20.4.4 and Table 20.2 for an enclosure with a supporting frame, or

c) The requirements in 33.1 for an enclosure with equivalent reinforcement.

Documents
Document Sharing Hub
Full document details: UL 498 1999

Table 20.2
Minimum thickness of sheet metal for enclosures

Maximum dimensions of enclosure				Minimum average thickness of sheet metal							
				Steel[a]				Copper, brass, or aluminum			
Length or width,		Area,		Without supporting frame,		With supporting[b] frame or equivalent reinforcement,[c]		Without supporting frame,		With supporting frame[b] or equivalent reinforcement,[c]	
inches	(cm)	inches^2	(cm^2)	inch	(mm)	inch	(mm)	inch	(mm)	inch	(mm)
3	7.6	6	38.7	0.020	0.51	0.20	0.51	0.023	0.58	0.023	0.58
8	20.3	30	194	0.026	0.66	0.20	0.51	0.036	0.91	0.029	0.74
12	30.5	90	581	0.032	0.81	0.20	0.51	0.045	1.14	0.029	0.74
18	45.7	135	871	0.042	1.07	0.32	0.81	0.058	1.47	0.045	1.14
24	61	360	2323	0.053	1.35	0.42	1.07	0.075	1.91	0.058	1.47
46	122	1200	7742	0.067	1.70	0.53	1.35	0.095	2.41	0.075	1.91
60	152	1500	9677	0.093	2.36	0.53	1.35	0.122	3.10	0.075	1.91
Over 60	Over 152	Over 1500	Over 9677	0.123	3.12	0.53	1.35	0.153	3.89	0.075	1.91

[a] Other metals may be used if they are tested in accordance with 33.1.
[b] A supporting frame is described in 20.4.4.
[c] As referenced in 20.4.3, thinner metals may be used if they are tested in accordance with 33.1.

20.4.4 With regard to Table 20.2, a supporting frame is a structure of angle or channel or folded rigid piece of sheet metal that is attached to and has essentially the same outside dimensions as the enclosure surface, and that has sufficient torsional rigidity to resist the bending moments that may be transmitted by the enclosure surface when the surface is deflected. Constructions considered to be without supporting frame include:

a) A single sheet with single formed flanges (formed edges);

b) A single sheet that is corrugated or ribbed;

c) An enclosure surface loosely attached to a frame, for example, with spring clips; and

d) An enclosure surface having an unsupported edge.

20.4.5 A watertight connection at a conduit entrance shall be a conduit hub or the equivalent, such as a knockout or fitting, located so that when conduit is connected and the enclosure is mounted in the intended manner the enclosure complies with the tests specified in Table 20.1.

20.4.6 An enclosure marked ″Type 2 Enclosure″ shall have provision for drainage. Provision for the entrance of conduit at the top or side walls shall be a conduit hub or the equivalent as described in 20.4.5.

20.4.7 A bushed hole for open wiring shall not be located in the top or back of the enclosure unless a hood fitting is provided; when a bushed hole is located in a side above live parts, it shall provide for a downward direction of the wire leaving the enclosure.

Documents
Document Sharing Hub
Full document details: UL 498 1999

20.4.8 An enclosure marked ″Type 3R Enclosure″ shall have:

a) A conduit hub or the equivalent as described in 20.4.5 for a watertight connection when the conduit entrances are at a location higher than the lowest live part in compliance with 20.4.5;

b) Provision for drainage; and

c) If a door is used, provision for locking the door.

20.4.9 An enclosure of a transformer that complies with the requirements for a rainproof enclosure, if used with a field-added rainproof hood, may be shipped without the hood when the transformer and hood are marked as described in 43.2.2 – 43.2.4.

20.4.10 The mounting or securing means provided for the hood shall be external to the enclosure.

Exception: Internal means may be provided if constructed so as to reduce the risk of water entering the enclosure.

20.4.11 Hinges and other attachments shall be resistant to corrosion.

20.4.12 Metals shall not be used in such combination as to cause galvanic action that will adversely affect any part of the transformer.

20.4.13 The enclosure of a transformer marked ″Type 3R Enclosure″ shall be constructed to exclude a beating rain.

20.4.14 Unless the enclosure is constructed so that it will obviously exclude a beating rain, a transformer marked ″Type 3R Enclosure″ is to be tested as described in the Water Spray Test, Section 38, to determine if it complies with the requirement in 20.4.13.

20.4.15 A gasket of an elastomeric or thermoplastic material or a composition gasket utilizing an elastomeric material used to comply with the requirements for a Type 2 or a Type 3R enclosure shall be tested in accordance with the Accelerated Aging of Gaskets Test, Section 40.

21 Corrosion Resistance

21.1 A Type 3R enclosure made of sheet steel (other than stainless steel) having a thickness of 0.120 inch (3.05 mm) or more shall be made corrosion resistant by one of the following coatings:

a) Hot-dipped, mill-galvanized sheet steel complying with the coating designation G60 or A60 in Table I of ASTM A525-1987, with not less than 40 percent of the zinc on any side, based on the minimum single spot test requirement in this ASTM designation. The weight of zinc coating may be determined by any method; however, in case of question, the weight of coating shall be established in accordance with the test method of ASTM A90-1981.

b) A zinc coating, other than that provided on hot-dipped, mill-galvanized sheet steel, uniformly applied to an average thickness of not less than 0.00041 inch (0.010 mm) on each surface with a minimum thickness of 0.00034 inch (0.009 mm). The thickness of the coating shall be established by the Metallic Coating Thickness Test, Section 34.

c) Two coats of an organic finish of the epoxy or alkyd-resin type or other outdoor paint on both surfaces after forming. The acceptability of the paint is to be determined by consideration of its composition or by corrosion tests if these are considered necessary.

Documents
Document Sharing Hub
Full document details: UL 498 1999

d) Any one of the means specified in 21.2.

21.2 A Type 3R enclosure made of sheet steel (other than stainless steel) having a thickness of less than 0.120 inch (3.05 mm) shall be made corrosion resistant by one of the following coatings:

a) Hot-dipped, mill-galvanized sheet steel complying with the coating designation G90 in Table I of ASTM A525-1987, with not less than 40 percent of the zinc on any side, based on the minimum single spot test requirement in this ASTM designation. The weight of zinc coating may be determined by any method; however, in case of question, the weight of coating shall be established in accordance with the test method of ASTM A90-1981.

b) A zinc coating, other than that provided on hot-dipped, mill-galvanized sheet steel, uniformly applied to an average thickness of not less than 0.00061 inch (0.015 mm) on each surface with a minimum thickness of 0.00054 inch (0.014 mm). The thickness of the coating shall be established by the Metallic Coating Thickness Test, Section 34. An annealed coating shall also comply with 21.5 and 21.6.

c) A cadmium coating not less than 0.0010 inch (0.025 mm) thick on both surfaces. The thickness of coating shall be established by the Metallic Coating Thickness Test, Section 34.

d) A zinc coating complying with the requirements in 21.1 (a) or (b) with one coat of outdoor paint as specified in 21.1(c).

e) A cadmium coating not less than 0.000075 inch (0.0019 mm) thick on both surfaces with one coat of outdoor paint on both surfaces, or not less than 0.000051 inch (0.0013 mm) thick on both surfaces with two coats of outdoor paint on both surfaces. The thickness of the cadmium coating shall be established by the Metallic Coating Thickness Test, Section 34, and the paint shall be as specified in 21.1(c).

21.3 With regard to 21.1 and 21.2, other finishes, including paints, special metallic finishes, and combinations of the two may be used when comparative tests with galvanized sheet steel (without annealing, wiping, or other surface treatment) complying with 21.1(a) or 21.2(a), as applicable, indicate they provide equivalent protection. Among the factors taken into consideration when judging such coating systems are:

a) Exposure to salt spray,

b) Moist carbon dioxide-sulfur dioxide-air mixtures,

c) Moist hydrogen sulfide-air mixtures,

d) Ultraviolet light, and

e) Water.

21.4 An enclosure made of stainless steel, copper, brass, or aluminum need not be made additionally corrosion resistant.

21.5 An annealed coating on sheet steel that is bent or similarly formed or extruded or rolled at edges of holes after annealing shall additionally be painted in the bent or formed area if the bending or forming process damages the zinc coating.

Documents
Document Sharing Hub
Full document details: UL 498 1999

21.6 If flaking or cracking of the zinc coating at the outside radius of the bent or formed section is visible at 25 power magnification, the zinc coating is considered damaged. Simple sheared or cut edges and punched holes are not required to be additionally protected.

22 Current-Carrying Parts

22.1 A current-carrying part shall be of silver, copper, aluminum, alloys of these metals, or the equivalent.

22.2 An aluminum current-carrying part shall be plated at each bolted joint with tin, silver, nickel, or cadmium.

Exception No. 1: An aluminum current-carrying part need not be plated if one or more internal connections are welded and if any connections to the part that are not welded are assembled using a corrosion inhibiting compound.

Exception No. 2: Plating is not necessary when a bus bar is welded to an aluminum pad to which pressure terminal connectors are to be bolted if a corrosion-inhibiting compound is provided along with instructions for its application as specified in 43.3.14.

22.3 Iron and steel shall not be used for a current-carrying part.

22.4 A plated steel screw, nut, and stud may be used to secure a soldering lug, pressure wire connector, or bus bar. A No. 10 or larger plated steel wire-binding screw may be used at a terminal, in connection with a nonferrous terminal plate.

22.5 Copper and brass shall not be used for plating wire binding screws, nuts, and stud terminals. It is not prohibited to use a plating of cadmium, zinc, tin, or silver.

22.6 An uninsulated live part shall be secured so that it is prevented from turning or shifting in position when such motion can result in the reduction of spacings below minimum required values.

22.7 Friction between surfaces shall not be used as means to prevent shifting or turning of a live part.

22.8 A spring washer of a type intended for use with an aluminum bus shall be used at one end of a bolt that secures current-carrying parts together if an aluminum part is included in the joint.

Exception No. 1: A spring washer may be replaced with a split-ring lock washer and flat washer if each aluminum part in the joint has a tensile yield strength of at least 20,000 pounds per square inch (138 MPa).

Exception No. 2: A flat washer, a split-ring lock washer, or a bolt head that complies with 22.10(b) may be used in place of a spring washer if aluminum bolts are used.

Exception No. 3: A spring washer is not required for a type of fastener equivalent to that used for investigating a component wire connector in accordance with the requirements in the Standard for Wire Connectors and Soldering Lugs for Use with Copper Conductors, UL 486A, or the requirements in the Standard for Wire Connectors for Use with Aluminum Conductors, UL 486B.

Exception No. 4: A spring washer is not required at a bolted contact of an aluminum alloy part used in the grounding circuit for an application such as the service grounding electrode, a neutral bonding conductor, or an equipment grounding conductor.

Documents
Document Sharing Hub
Full document details: UL 498 1999