UL 498

Underwriters Laboratories Inc.

Standard for Safety

Attachment Plugs and Receptacles

Documents
Document Sharing Hub

Full document details: UL 498 2008

Documents
Document Sharing Hub
This PDF Standard downloaded from www.bzfxw.com
Full document details: UL 498 2008

Underwriters Laboratories Inc. (UL)
333 Pfingsten Road
Northbrook, IL 60062-2096

UL Standard for Safety for Attachment Plugs and Receptacles, UL 498

Fourteenth Edition, Dated December 26, 2001

Revisions: This Standard contains revisions through and including October 31, 2008.

SUMMARY OF TOPICS

This revision to ANSI/UL 498 incorporates the following:

1. Revision to the Tamper Resistant Receptacle Probe Test to Require the Use of an Additional, Larger Probe

2. Clarification of the Tamper Resistant Impact Testing Regarding Breakage of the Receptacle Face

3. Correction of Requirements in Supplement SE Regarding Corrosion Resistance and Plating Thickness

Text that has been changed in any manner is marked with a vertical line in the margin. Changes in requirements are marked with a vertical line in the margin and are followed by an effective date note indicating the date of publication or the date on which the changed requirement becomes effective.

The new and revised requirements are substantially in accordance with UL's Proposal(s) on this subject dated May 16, 2008.

The revisions dated October 31, 2008 include a reprinted title page (page1) for this Standard.

As indicated on the title page (page 1), this UL Standard for Safety is an American National Standard. Attention is directed to the note on the title page of this Standard outlining the procedures to be followed to retain the approved text of this ANSI/UL Standard.

As indicated on the title page (page1), this UL Standard for Safety has been adopted by the Department of Defense.

The UL Foreword is no longer located within the UL Standard. For information concerning the use and application of the requirements contained in this Standard, the current version of the UL Foreword is located on ULStandardsInfoNet at: http://ulstandardsinfonet.ul.com/ulforeword.html

The master for this Standard at UL's Northbrook Office is the official document insofar as it relates to a UL service and the compliance of a product with respect to the requirements for that product and service, or if there are questions regarding the accuracy of this Standard.

UL's Standards for Safety are copyrighted by UL. Neither a printed copy of a Standard, nor the distribution diskette for a Standard-on-Diskette and the file for the Standard on the distribution diskette should be altered in any way. All of UL's Standards and all copyrights, ownerships, and rights regarding those Standards shall remain the sole and exclusive property of UL.

Documents
Document Sharing Hub

Full document details: UL 498 2008

All rights reserved. No part of this publication may be reproduced, stored in a retrieval system, or transmitted in any form by any means, electronic, mechanical photocopying, recording, or otherwise without prior permission of UL.

Revisions of UL Standards for Safety are issued from time to time. A UL Standard for Safety is current only if it incorporates the most recently adopted revisions.

UL provides this Standard ″as is″ without warranty of any kind, either expressed or implied, including but not limited to, the implied warranties of merchantability or fitness for any purpose.

In no event will UL be liable for any special, incidental, consequential, indirect or similar damages, including loss of profits, lost savings, loss of data, or any other damages arising out of the use of or the inability to use this Standard, even if UL or an authorized UL representative has been advised of the possibility of such damage. In no event shall UL's liability for any damage ever exceed the price paid for this Standard, regardless of the form of the claim.

UL will attempt to answer support requests concerning electronic versions of its Standards. However, this support service is offered on a reasonable efforts basis only, and UL may not be able to resolve every support request. UL supports the electronic versions of its Standards only if they are used under the conditions and operating systems for which it is intended. UL's support policies may change from time-to-time without notification.

UL reserves the right to change the format, presentation, file types and formats, delivery methods and formats, and the like of both its printed and electronic Standards without prior notice.

Purchasers of the electronic versions of UL's Standards for Safety agree to defend, indemnify, and hold UL harmless from and against any loss, expense, liability, damage, claim, or judgement (including reasonable attorney's fees) resulting from any error or deviation introduced while purchaser is storing an electronic Standard on the purchaser's computer system.

If a single-user version electronic Standard was purchased, one copy of this Standard may be stored on the hard disk of a single personal computer, or on a single LAN file-server or the permanent storage device of a multiple-user computer in such a manner that this Standard may only be accessed by one user at a time and for which there is no possibility of multiple concurrent access.

If a multiple-user version electronic Standard was purchased, one copy of the Standard may be stored on a single LAN file-server, or on the permanent storage device of a multiple-user computer, or on an Intranet server. The number of concurrent users shall not exceed the number of users authorized.

Electronic Standards are intended for on-line use, such as for viewing the requirements of a Standard, conducting a word search, and the like. Only one copy of the Standard may be printed from each single-user version of an electronic Standard. Only one copy of the Standard may be printed for each authorized user of a multiple-user version of an electronic Standard. Because of differences in the computer/software/printer setup used by UL and those of electronic Standards purchasers, the printed copy obtained by a purchaser may not look exactly like the on-line screen view or the printed Standard.

An employee of an organization purchasing a UL Standard can make a copy of the page or pages being viewed for their own fair and/or practical internal use.

The requirements in this Standard are now in effect, except for those paragraphs, sections, tables, figures, and/or other elements of the Standard having future effective dates as indicated in the note following the affected item. The prior text for requirements that have been revised and that have a future effective date are located after the Standard, and are preceded by a ″SUPERSEDED REQUIREMENTS″ notice.

Documents
Document Sharing Hub
This PDF Standard downloaded from www.bzfxw.com
Full document details: UL 498 2008

New product submittals made prior to a specified future effective date will be judged under all of the requirements in this Standard including those requirements with a specified future effective date, unless the applicant specifically requests that the product be judged under the current requirements. However, if the applicant elects this option, it should be noted that compliance with all the requirements in this Standard will be required as a condition of continued Listing, Recognition, and Follow-Up Services after the effective date, and understanding of this should be signified in writing.

Copyright © 2008 Underwriters Laboratories Inc.

Documents
Document Sharing Hub

Full document details: UL 498 2008

This Standard consists of pages dated as shown in the following checklist:

Page	Date
1	October 31, 2008
2-3	May 14, 2004
4-7	November 16, 2007
8	October 31, 2008
9	December 26, 2001
10	May 25, 2007
11	November 16, 2007
12	May 25, 2007
13	December 26, 2001
14	May 14, 2004
15	November 16, 2007
16-16B	May 25, 2007
17	December 26, 2001
18	May 25, 2007
19-29	December 26, 2001
30	November 16, 2007
31	December 26, 2001
32	November 16, 2007
33-36	December 26, 2001
37-38B	March 15, 2006
39-41	December 26, 2001
42	November 16, 2007
43-44	December 26, 2001
45	November 16, 2007
46	October 23, 2002
47-52	December 26, 2001
53-54B	November 16, 2007
55-57	December 26, 2001
58	May 25, 2007
59-62	December 26, 2001
63-65	November 16, 2007
66	December 26, 2001
67-68	November 16, 2007
69	March 15, 2006
70-70B	October 23, 2002
71-72	November 16, 2007
73-79	December 26, 2001
80-81	November 16, 2007
82-85	December 26, 2001
86-94B	November 16, 2007
95-102	December 26, 2001
103	May 14, 2004
104	November 16, 2007
105-108	December 26, 2001
109-114B	November 16, 2007
115-117	March 15, 2006
118	November 16, 2007
118A-118B	March 15, 2006
119	December 26, 2001

Documents
Document Sharing Hub
This PDF Standard downloaded from www.bzfxw.com
Full document details: UL 498 2008

120-122B . . . . . November 16, 2007
123-129 . . . . . December 26, 2001
130 . . . . . May 14, 2004
131 . . . . . November 16, 2007
132 . . . . . December 26, 2001
133 . . . . . October 23, 2002
134-135 . . . . . November 16, 2007
136 . . . . . December 26, 2001
137 . . . . . November 16, 2007
138-146 . . . . . December 26, 2001
147 . . . . . November 16, 2007
148-150 . . . . . December 26, 2001
151-152 . . . . . March 15, 2006
153-162 . . . . . December 26, 2001
163-164B . . . . . November 16, 2007
165-168 . . . . . December 26, 2001
169-170B . . . . . October 31, 2008
171-175 . . . . . December 26, 2001
176-176B . . . . . November 16, 2007
177 . . . . . December 26, 2001
178-179 . . . . . November 16, 2007
180 . . . . . December 26, 2001
181 . . . . . November 16, 2007
182-187 . . . . . December 26, 2001
188 . . . . . November 16, 2007
189-192 . . . . . December 26, 2001
193 . . . . . November 16, 2007
194-210 . . . . . December 26, 2001
211 . . . . . November 16, 2007
212-212B . . . . . March 15, 2006
213-214 . . . . . December 26, 2001
215-216 . . . . . November 16, 2007
217-221 . . . . . December 26, 2001
222 . . . . . November 16, 2007
223 . . . . . May 14, 2004
224 . . . . . March 15, 2006
225 . . . . . October 31, 2008
226 . . . . . December 26, 2001
SA1 . . . . . May 25, 2007
SA2 . . . . . December 26, 2001
SB1 . . . . . May 14, 2004
SB2-SB10 . . . . . December 26, 2001
SC1-SC10 . . . . . December 26, 2001
SD1 . . . . . December 26, 2001
SD2-SD3 . . . . . October 23, 2002
SD4 . . . . . November 16, 2007
SD5-SD11 . . . . . December 26, 2001
SD12-SD12B . . . . . November 16, 2007
SD13-SD16 . . . . . December 26, 2001
SD17 . . . . . November 16, 2007
SD18 . . . . . December 26, 2001
SD19-SD20 . . . . . November 16, 2007
SD21-SD28 . . . . . December 26, 2001

Documents
Document Sharing Hub
Full document details: UL 498 2008

SD29 . . . . . November 16, 2007
SD30-SD32. . . . . December 26, 2001
SD33-SD34 . . . . . May 25, 2007
SE1-SE2 . . . . . May 25, 2007
SE3. . . . . October 31, 2008
SE4-SE6 . . . . . May 25, 2007
A1-A2. . . . . November 16, 2007
B1 . . . . . October 31, 2008
B2 . . . . . March 15, 2006
B3 . . . . . December 26, 2001
B4-B6 . . . . . October 31, 2008
SR1-SR2 . . . . . October 31, 2008

Documents
Document Sharing Hub
This PDF Standard downloaded from www.bzfxw.com
Full document details: UL 498 2008

DECEMBER 26, 2001
(Title Page Reprinted: October 31, 2008)

ANSI/UL 498-2008

UL 498

Standard for Attachment Plugs and Receptacles

First Edition – December, 1931
Second Edition – September, 1939
Third Edition – June, 1942
Fourth Edition – November, 1948
Fifth Edition – September, 1952
Sixth Edition – November, 1954
Seventh Edition – December, 1959
Eighth Edition – May, 1962
Ninth Edition – April, 1974
Tenth Edition – September, 1981
Eleventh Edition – November, 1986
Twelfth Edition – April, 1991
Thirteenth Edition – April, 1996

Fourteenth Edition

December 26, 2001

The most recent designation of ANSI/UL 498 as an American National Standard (ANSI) occurred on October 21, 2008. The ANSI approval for this standard does not include the Cover Page, Transmittal Pages, Title Page, or effective date information.

This ANSI/UL Standard for Safety, which consists of the Fourteenth edition including revisions through October 31, 2008, is under continuous maintenance, whereby each revision is ANSI approved upon publication.

The Department of Defense (DoD) has adopted UL 498 on August 17, 1981. The publication of revised pages or a new edition of this Standard will not invalidate the DoD adoption.

An effective date included as a note immediately following certain requirements is one established by Underwriters Laboratories Inc. and is not part of the ANSI standard.

Revisions of this Standard will be made by issuing revised or additional pages bearing their date of issue. A UL Standard is current only if it incorporates the most recently adopted revisions, all of which are itemized on the transmittal notice that accompanies the latest set of revised requirements. Comments or proposals for revisions on any part of the Standard may be submitted to UL at any time. Proposals should be submitted via a Proposal Request in UL's On-Line Collaborative Standards Development System (CSDS) at http://csds.ul.com.

COPYRIGHT © 2008 UNDERWRITERS LABORATORIES INC.

Documents
Document Sharing Hub

Full document details: UL 498 2008

No Text on This Page

Documents
Document Sharing Hub
This PDF Standard downloaded from www.bzfxw.com
Full document details: UL 498 2008

CONTENTS

INTRODUCTION

1 Scope 15
2 Glossary 16
3 Components 19
4 Units of Measurement 19
5 References 19

CONSTRUCTION

ALL DEVICES

6 General 19
7 Configurations 20
8 Insulating Materials 20
8.1 General 20
8.2 Flammability 21
8.3 Electrical properties 21
8.4 Thermal properties 22
8.5 Vulcanized fiber 23
8.6 Sealing compounds 23
8.7 Fuse enclosures 23
9 Enclosure 24
9.1 General 24
9.2 Male faces and wire terminations 26
10 Current-Carrying Parts 27
10.1 General 27
10.2 Contacts 28
11 Grounding and Dead Metal Parts 29
12 Terminals 30
12.1 General 30
12.2 Wire-binding screw terminals 31
12.3 Soldering lugs 32
12.4 Pressure-wire terminals 32
13 Cord Entry and Strain Relief 33
14 Spacings 34
15 Assembly 34
15.1 General 34
15.2 Grounding and polarization 35
15.3 Mating and interchangeability 35
15.4 Fuseholders 37
15.5 Switches 37

Documents
Document Sharing Hub
Full document details: UL 498 2008

ATTACHMENT PLUGS AND INLETS

16 Insulating Materials 38
17 Enclosure 38
17.1 General 38
17.2 Grip 38
17.3 Face size 38A
18 Current-Carrying Parts 39
19 Grounding and Dead Metal Parts 40
20 Terminals and Leads 42
20.1 Terminals 42
20.2 Leads 42
21 Assembly 43
22 Weatherproof Type 45

CORD CONNECTORS

23 Enclosure 45
23.1 General 45
23.2 Face size 45
24 Grounding and Dead Metal Parts 49
25 Terminals 49
26 Assembly 49
26.1 General 49
26.2 Outlet separation 50

RECEPTACLES

27 Insulating Materials 50
28 Enclosure 50
29 Grounding and Dead Metal Parts 51
29.1 General 51
29.2 Flush receptacles 52
30 Terminals and Leads 52
30.1 General 52
30.2 Push-in terminals 53
30.3 Pin-type or insulation-displacement terminals 53
30.4 Open wiring on insulators 53
30.5 Leads 54
31 Assembly 54A
31.1 General 54A
31.2 Flush receptacles 55
31.3 Surface-mount receptacles 56
32 Flush Plates 57
33 Self-Grounding Receptacles 57
34 Isolated-Ground Receptacles 57
35 CO/ALR Type 57
36 AL-CU Type 57
37 Tamper-Resistant 58
37A Weather-Resistant 58

Documents
Document Sharing Hub
This PDF Standard downloaded from www.bzfxw.com
Full document details: UL 498 2008

SELF-CONTAINED RECEPTACLES FOR USE WITHOUT A SEPARATE OUTLET BOX

38 General 58
39 Spacings 58
40 Insulating Materials 58
41 Enclosures 59
42 Mounting Means 59
43 Frame-Construction Mounting Brackets 60
44 Field Replacement 60

CURRENT TAPS

45 General 60

FLATIRON AND APPLIANCE PLUGS

46 General 61
47 Current-Carrying Parts 61
48 Cord Guard 61
49 Strain Relief 62
50 Female Contacts 62
51 Terminals 63
52 Spacings 63
53 Assembly 64

PERFORMANCE

GENERAL

54 Representative Devices 64

ALL DEVICES

55 Comparative Tracking Index Test 74
56 Glow Wire Test 74
57 High-Current Arc Resistance to Ignition Test 74
58 Mold Stress Relief Test 76
59 Moisture Absorption Resistance Test 77
60 Dielectric Voltage-Withstand Test 77
60.1 Devices for fixed or permanent installation 77
60.2 Cord-connected devices 78
61 Accelerated Aging Tests 79
61.1 General 79
61.2 Rubber, EPDM, and TEE compounds 79
61.3 PVC compounds and copolymers 79
62 Insulation Resistance Test 80
63 Conductor Secureness Test 80
64 Tightening Torque Test 81

Documents
Document Sharing Hub
Full document details: UL 498 2008

ATTACHMENT PLUGS

ALL DEVICES

65 General 81
66 Security of Blades Test 81
66.1 General 81
66.2 Self-hinged plugs 82
67 Secureness-Of-Cover Test 82
68 Crushing Test 82
69 Attachment Plug Grip Tests 82
70 Integrity of Assembly Test 86
70.1 General 86
70.2 Self-hinged plugs 86
71 Self-Hinge Flexing Test 87
72 Terminal Temperature Test 87
73 Fuseholder Temperature Test 88

PIN-TYPE TERMINALS

74 General 89
75 Assembly Test 89
76 Temperature Test 90
77 Strain Relief Test 90
78 Fault Current Test 91
79 Dielectric Voltage-Withstand Test 92

INLETS

ALL DEVICES

80 General 92
81 Security of Blades Test 92
82 Terminal Temperature Test 93
83 Fuseholder Temperature Test 94

PRESSURE-WIRE TERMINALS

84 General 95
85 Strength of Insulating Base Test 96

CORD CONNECTORS

ALL DEVICES

86 General 96
87 Retention of Plugs Tests 96
88 Overload Tests 97
88.1 General 97
88.2 Current overload test 99
88.3 Horsepower overload test 99
89 Temperature Test 103
90 Retention of Plugs Test (Repeated) 104

Documents
Document Sharing Hub
This PDF Standard downloaded from www.bzfxw.com
Full document details: UL 498 2008

90.1 General 104
90.2 Plug retention 105
90.3 Plug Withdrawal 105
91 Resistance to Arcing Test 106
92 Latching Mechanism Tests 106
92.1 General 106
92.2 Cycling test 106
92.3 Pull test 107
93 Fuseholder Temperature Test 108
94 Improper Insertion Test 110
95 Potential Drop in Grounding Connections Test 111
96 Integrity of Assembly Test 111
96.1 General 111
96.2 Self-hinged cord connectors 112
97 Self-Hinge Flexing Test 112

PIN-TYPE TERMINALS

98 General 112
99 Assembly Test 112
100 Temperature Test 113
101 Strain Relief Test 113
102 Fault Current Test 114
103 Dielectric Voltage-Withstand Test 115

RECEPTACLES

ALL DEVICES

104 General 115
105 Retention of Blades Test 115
106 Overload Test 119
107 Temperature Test 120
108 Retention of Blades Test (Repeated) 122
109 Resistance to Arcing Test 122A
110 Retention of Plugs Test 123
111 Overload Test 124
111.1 General 124
111.2 Current overload test 125
111.3 Horsepower overload test 126
112 Temperature Test 129
112.1 Contact and terminal temperature 129
112.2 Feed-through terminal temperature 131
113 Retention of Plugs Test (Repeated) 132
113.1 General 132
113.2 Plug retention 132
113.3 Plug withdrawal 133
114 Resistance to Arcing Test 133
115 Fuseholder Temperature Test 134
116 Fault Current Test 135
117 Terminal Strength Test 136
118 Assembly Security Test 140
119 Grounding Contact Test 147

Documents
Document Sharing Hub
Full document details: UL 498 2008

PRESSURE-WIRE TERMINALS

120 General 153
121 Strength of Insulating Base Test 155

SELF-GROUNDING RECEPTACLES

122 General 155
123 Fault Current Test 155

PUSH-IN TERMINALS

124 General 158
125 Pullout Test 158
126 Temperature Test 159
127 Conductor Insertion and Retention Test 159
128 Conductor Push-In Test 160
129 Terminal Abuse Test 161
130 Temperature Test 164

TAMPER-RESISTANT RECEPTACLES

131 General 169
132 Probe Test 169
133 Impact Test 170B
133.1 General 170B
133.2 Ball-pendulum impact 170B
133.3 Vertical-ball impact 173
134 Mechanical Endurance Test 175
135 Dielectric Voltage-Withstand Test 175

PIN-TYPE OR INSULATION-DISPLACEMENT TERMINALS

136 General 176
137 Heat Cycling and Vibration Tests 176
137.1 General 176
137.2 Heat cycling test 176
137.3 Vibration test 177
137.4 Heat cycling test (Continued) 177
137.5 Calculations 177

SELF-CONTAINED RECEPTACLES

138 General 178
139 Heat Cycling and Vibration Tests 178
139.1 General 178
139.2 Heat cycling test 179
139.3 Vibration test 180
139.4 Calculations 181
140 Cable Pullout Test 181
141 Conductor Pullout Test 181
142 Mounting Strength Test 182
142.1 General 182

Documents
Document Sharing Hub
This PDF Standard downloaded from www.bzfxw.com
Full document details: UL 498 2008

142.2 Receptacles mounted directly in panels 182
142.3 Receptacles supported by mounting brackets 182
142.4 Testing 182
143 Wall-Mounting Secureness Test 183
144 Assembly Security Test 183
144.1 General 183
144.2 Method A 183
144.3 Method B 188
145 Field Replacement Test 188
146 Fault Current Withstand Test 188
147 Knockouts Test 189
148 Creep Test 189
149 Mold Stress Test 189
150 Specimen Flammability Test 189
150.1 General 189
150.2 Method A 190
150.3 Method B 190

CURRENT TAPS

ALL DEVICES

151 General 190
152 Contact Security Test 190

FLATIRON AND APPLIANCE PLUGS

153 General 191
154 Millivolt Drop Test 191
155 Overload Test 191
156 Heating Test 192
157 Millivolt Drop Test Repeated 192
158 Crushing Test 192
159 Mechanical Endurance Test 192
160 Accelerated Aging Test 195
161 Cord Guard Test 195

RATINGS

162 Details 197

MARKINGS AND INSTRUCTIONS

163 General 201
163.1 Details 201
163.2 Location of markings and instructions 201
164 Identification and Marking of Terminals 221
164.1 Grounded and grounding 221
164.2 Other terminals 222
164.3 Removable parts 225

Documents
Document Sharing Hub

Full document details: UL 498 2008

SUPPLEMENT SA - RESERVED FOR FUTURE USE

SUPPLEMENT SB - ENCLOSURE TYPES FOR ENVIRONMENTAL PROTECTION

INTRODUCTION

SB1 Scope SB1
SB2 Glossary SB1

CONSTRUCTION

SB3 General SB2
SB4 Polymeric Enclosures SB3
SB5 Gaskets SB4

PERFORMANCE

SB6 General SB4

MARKINGS

SB7 General SB8

SUPPLEMENT SC - MARINE SHORE POWER INLETS

INTRODUCTION

SC1 Scope SC1
SC2 Glossary SC1
SC3 General SC1

CONSTRUCTION

SC4 General SC2
SC5 Insulating Materials SC4
SC6 Corrosion Resistance SC4

PERFORMANCE

SC7 General SC4
SC8 Salt-Spray Test SC4
SC9 Dielectric Voltage-Withstand Test SC5
SC10 Mechanical Strength Test SC5
SC11 Water-Spray Test SC7
SC12 Shock Test SC10

Documents
Document Sharing Hub
This PDF Standard downloaded from www.bzfxw.com
Full document details: UL 498 2008

SUPPLEMENT SD - HOSPITAL GRADE DEVICES

INTRODUCTION

SD1 Scope SD1

CONSTRUCTION

SD2 General SD1

PERFORMANCE

GENERAL

SD3 Representative Devices SD2

HOSPITAL GRADE ATTACHMENT PLUGS

SD4 General SD4
SD5 Strain Relief Tests SD4
SD5.1 General SD4
SD5.2 Method A – static pull SD4
SD5.3 Method B – rotary pull SD4
SD5.4 Method C – abrupt removal SD5
SD5.5 Straight attachment plugs SD7
SD5.6 Angle attachment plugs SD7
SD6 Crushing Test SD10
SD7 Impact Resistance Test SD10
SD8 Mechanical Drop Test SD10
SD9 Mold Stress Relief Test SD12

HOSPITAL GRADE CORD CONNECTORS

SD10 General SD12
SD11 Grounding Contact Temperature Test SD12A
SD12 Resistance Test SD13
SD13 Grounding Contact Overstress Test SD13
SD14 Plug Connection and Separation Test SD16
SD15 Crushing Test SD16
SD16 Impact Resistance Test SD17
SD17 Mechanical Drop Test SD17
SD18 Mold Stress Relief Test SD19
SD19 Strain Relief Tests SD19
SD19.1 General SD19
SD19.2 Method A – static pull SD20
SD19.3 Method B – rotary pull SD20
SD19.4 Method C – abrupt removal SD20

Documents
Document Sharing Hub
Full document details: UL 498 2008

HOSPITAL GRADE RECEPTACLES

SD20 General SD23
SD21 Abrupt Plug Removal Test SD23
SD22 Grounding Contact Temperature Test SD29
SD23 Resistance Test SD29
SD24 Fault Current Test SD29
SD25 Grounding Contact Overstress Test SD30
SD26 Terminal Strength Test SD32
SD27 Assembly Security Test SD32
SD28 Impact Test SD32
SD29 Mold Stress Relief Test SD32

MARKINGS

SD30 General SD33

SUPPLEMENT SE - WEATHER-RESISTANT RECEPTACLES

INTRODUCTION

SE1 Scope SE1

CONSTRUCTION

SE2 General SE2
SE3 Insulating Materials SE2
SE4 Corrosion Resistance SE2

PERFORMANCE

SE5 General SE3
SE6 Cold Impact Test SE3
SE7 Accelerated Aging Test SE4
SE8 Ultraviolet Light and Water Exposure Test SE4

MARKINGS

SE9 General SE5

APPENDIX A

Standards for Components. A1

APPENDIX B

Wiring Device Configurations B1

Documents
Document Sharing Hub
This PDF Standard downloaded from www.bzfxw.com
Full document details: UL 498 2008

No Text on This Page

Documents
Document Sharing Hub

Full document details: UL 498 2008

This page intentionally left blank.

Documents
Document Sharing Hub
This PDF Standard downloaded from www.bzfxw.com
Full document details: UL 498 2008

INTRODUCTION

1 Scope

1.1 These requirements cover attachment plugs, receptacles, cord connectors, inlets, current taps provided with wiring terminals for flexible cord, and flatiron and appliance plugs - all intended for connection to a branch circuit for use in accordance with the National Electrical Code, ANSI/NFPA 70.

1.2 These requirements do not cover devices rated at more than 200 A or for more than 600 V. See 6.1.

1.3 This standard does not directly apply to, but supplements the following standards:

a) Devices produced integrally with flexible cord or cable, covered by the Standard for Cord Sets and Power-Supply Cords, UL 817;

b) Current taps and adapters not provided with wiring terminals for flexible cord covered by the Standard for Current Taps and Adapters, UL 498A;

c) Devices employing male or female screwshells, covered by the Standard for Lampholders, UL 496;

d) Devices solely intended for direct connection to the branch circuit in accordance with the National Electrical Code, ANSI/NFPA 70, that are provided with contacts of the pin and sleeve type, covered by the Standard for Plugs, Receptacles and Cable Connectors of the Pin-and-Sleeve Type, UL 1682;

e) Single and multipole connectors intended for factory assembly to copper or copper alloy conductors or printed wiring boards for use in data, signal, control and power applications within and between electrical equipment, covered by the Standard for Component Connectors for Data, Signal, Control and Power Applications, UL 1977;

f) Devices intended for installation and use in hazardous (classified) locations in accordance with the National Electrical Code, ANSI/NFPA 70, covered by the Standard for Receptacle-Plug Combinations for Use in Hazardous (Classified) Locations, UL 1010;

g) Devices intended for use with telecommunications networks, covered by the Standard for Information Technology Equipment – Safety – Part 1: General Requirements, UL 60950-1, or the Standard for Communications Circuit Accessories, UL 1863;

h) Devices incorporating ground-fault circuit interruption circuitry, covered by the Standard for Ground-Fault Circuit Interrupters, UL 943;

i) Single- or two-outlet direct plug-in devices incorporating transient voltage surge suppression circuitry, covered by the Standard for Surge Protective Devices, UL 1449;

j) Single- or two-outlet direct plug-in devices incorporating electromagnetic interference filter circuitry, covered by the Standard for Electromagnetic Interference Filters, UL 1283; or

k) Cord-connected, relocatable power taps intended only for indoor use as a temporary extension of a grounding alternating-current branch circuit for general use, covered by the Standard for Relocatable Power Taps, UL 1363.

1.3 revised November 16, 2007

Documents
Document Sharing Hub

Full document details: UL 498 2008

1.4 This Standard contains the following supplements:

a) Supplement SA – Reserved for future use.

b) Supplement SB – Enclosure Types for Environmental Protection

c) Supplement SC – Marine Shore Power Inlets

d) Supplement SD – Hospital Grade Devices

e) Supplement SE – Weather-Resistant Receptacles

1.4 revised May 25, 2007

2 Glossary

2.1 For the purposes of this standard, the following definitions apply.

2.2 APPLIANCE COUPLER – A single-outlet, female contact device for attachment to a flexible cord as part of a detachable power-supply cord to be connected to an inlet (motor attachment plug).

2.3 APPLIANCE PLUG – An appliance coupler type of device having a cord guard and a slot configuration specified for use with heating or cooking appliances.

2.4 ATTACHMENT PLUG – A male contact device for the temporary connection of a flexible cord or cable to a receptacle, cord connector, flanged equipment power outlet, or other outlet device.

2.5 BULK SHIPMENT – Any packaging container having more than one receptacle not provided with a unit container.

2.6 CONFIGURATION, LOCKING – A device having a configuration that requires a motion other than a straight push or pull to connect or separate it when used with its mating part.

2.7 CORD CONNECTOR – A female contact device to be wired on flexible cord for use as an extension from an outlet to make a detachable electrical connection to an attachment plug or, as an appliance coupler, to an equipment inlet.

2.8 CURRENT TAP – A device provided with one set of male blades, one or two female outlets, and wiring terminals for flexible cord intended either for factory or field wiring.

2.9 ELECTRICAL (FUNCTIONAL) INSULATION – The insulation necessary for the proper functioning of the product and for basic protection against electrical shock. This includes all parts relied upon to support live parts in place, all internal barriers necessary to maintain spacings, and the outlet face portion of all female devices.

2.10 ENCLOSURE – That part of the device that renders inaccessible all or any parts of the device that may otherwise present a risk of electric shock, retards propagation of flame initiated by electrical disturbances occurring within, or both.

2.11 FIXTURE, EQUIPMENT, OR APPLIANCE OUTLET – A receptacle outlet device for mounting on utilization equipment.

Documents
Document Sharing Hub
This PDF Standard downloaded from www.bzfxw.com
Full document details: UL 498 2008

2.12 FLATIRON PLUG – An appliance coupler type of a device having a cord guard and a slot configuration specified for use with heating or cooking appliances.

Documents
Document Sharing Hub

Full document details: UL 498 2008

No Text on This Page

Documents
Document Sharing Hub
This PDF Standard downloaded from www.bzfxw.com
Full document details: UL 498 2008

2.13 GROUNDING-CONDUCTOR PATH – A path between the grounding pin, blade, or contact and the grounding terminal or, if the device has no grounding terminal, the point at which the path makes contact with a part of the metal raceway system, such as a box, box cover, or the raceway itself.

2.14 GROUNDING DEVICE – A device having a 5-15, 5-20, 5-30, 5-50, 6-15, 6-20, 6-30, 6-50, 7-15, 7-20, 7-30, 7-50, 14-15, 14-20, 14-30, 14-50, 14-60, 15-15, 15-20, 15-30, 15-50, 15-60, L5-15, L5-20, L5-30, L6-15, L6-20, L6-30, L7-15, L7-20, L7-30, L8-20, L8-30, L9-20, L9-30, L14-20, L14-30, L15-20, L15-30, L16-20, L16-30, L17-30, L21-20, L21-30, L22-20, L22-30, L23-20, L23-30, TT-R, or ML-2R configuration, the standard configuration illustrated in Figure C3.8, or a nonstandard configuration that employs one blade, pin, or contact exclusively for grounding.

2.15 HOUSING ADAPTER, ANGLE – A part that is intended to replace a portion of an attachment plug or cord connector housing so that the flexible cord exits the strain relief in the same plane as the face of the device.

2.16 HOUSING ADAPTER, SHROUD – A part that is intended to be assembled onto an attachment plug or cord connector to extend the housing beyond the plane of the face of the device.

2.17 INLET – (Motor Attachment Plug) A male contact device to be mounted on utilization equipment to provide an integral blade configuration for the connection of an appliance coupler or cord connector.

2.18 POLARIZED DEVICE – A device constructed for connection to a mating device only in the position that connects related poles of an electrical circuit.

2.19 RECEPTACLE, CLOCK – A flush receptacle having a recessed cord-storage space in an integral flush-device cover plate, commonly used with wall clocks.

2.20 RECEPTACLE, DISPLAY – A flush receptacle provided with a flush device plate or outlet box cover and closure plug or plugs that is intended for use in show window floors and similar locations where the device is not likely to be subjected to scrub water.

2.21 RECEPTACLE, DUPLEX – A receptacle having two contact devices on a single mounting yoke for flush mounting in a plane surface.

2.22 RECEPTACLE, FLUSH – A receptacle which is intended for mounting in or on an outlet box, an outlet-box cover, or a flush-device cover plate for fixed installation on a branch circuit.

2.23 RECEPTACLE, INTERCHANGEABLE or MODULAR – A flush receptacle which is assembled as a single, duplex or triplex outlet in the field from a system of individual outlet modules, mounting yokes, or flush device cover plates.

2.24 RECEPTACLE, ISOLATED GROUND – A receptacle having the grounding terminal electrically isolated from the system ground when installed in a metallic outlet box or raceway system.

2.25 RECEPTACLE, SELF-CONTAINED – A receptacle which includes an enclosure and mounting means intended for flush mounting without the use of a separate flush-device or other outlet box and for connection to one or more nonmetallic sheathed cables containing copper conductors in accordance with National Electrical Code, ANSI/NFPA-70. A self-contained receptacle is primarily used in mobile homes, recreational vehicles, manufactured buildings, and on-site frame construction.

2.26 RECEPTACLE, SELF-GROUNDING – A receptacle which includes a spring clip or other part to provide for electrical continuity between the grounded device yoke and the mounting screw.

Documents
Document Sharing Hub

Full document details: UL 498 2008

2.27 RECEPTACLE, SPLIT – A duplex receptacle having line terminals which are capable of being electrically separated.

2.28 RECEPTACLE, SURFACE-MOUNT – A receptacle which includes an enclosure and mounting means intended for surface mounting without the use of a separate outlet box and for connection to exposed nonmetallic cable as permitted by Article 336 of the National Electrical Code, ANSI/NFPA-70.

2.29 RECEPTACLE, TAMPER-RESISTANT – A receptacle which by its construction is intended to limit improper access to its energized contacts and is intended for use in pediatric patient care areas, in accordance with Article 517 of the National Electrical Code, ANSI/NFPA-70.

2.29.1 RECEPTACLE, WEATHER-RESISTANT – A flush-type receptacle which by its construction is intended to provide resistance to the effects of outdoor exposure when installed in accordance with Article 406 of the National Electrical Code, ANSI/NFPA-70.

2.29.1 added May 25, 2007

2.30 SELF-HINGE – A thin molded portion of an enclosure intended to bend during the assembly of a wiring device to a flexible cord.

2.31 TABLE TAP – A cord connector having more than one outlet and intended to rest on a horizontal surface while in use.

2.32 TERMINAL, INSULATION-DISPLACEMENT – A terminal having a contacting member that forces the conductor insulation aside and presses against the side of the conductor to make contact.

2.33 TERMINAL, PIN-TYPE (INSULATION-PIERCING) – A terminal having a contact pin that punctures the conductor insulation to contact the current-carrying conductor.

2.34 TERMINAL, PRESSURE-WIRE – A terminal which establishes a connection between one or more conductors and a terminal plate by means of mechanical pressure without the use of solder. A pressure-wire terminal may be either of the following types:

a) Clamp-Type – A pressure-wire terminal in which the conductor is held under a pressure plate or saddle clamp by one or more screws. This type of terminal may be provided in combination with a wire-binding screw terminal.

b) Setscrew-Type – A pressure-wire terminal in which the pressure is applied by the end of the screw bearing on the conductor, either directly or through a wire-protecting pad.

2.35 TERMINAL, PUSH-IN – A terminal where the stripped end of a conductor is pushed into the terminal and the clamping pressure is maintained by a spring mechanism, without the use of screws.

2.36 TERMINAL, WIRE-BINDING SCREW – A terminal in which the conductor is bent around the screw and is clamped directly under the head of the screw when it is tightened.

2.37 THROUGH-WIRING – A wiring method which permits a group of receptacles to be wired in parallel to a common branch circuit.

2.38 UNIT CONTAINER – The smallest carton, package, or container, in which a receptacle is packaged. A unit container may contain more than one receptacle if they are not intended to be removed from the container for individual sale.

Documents
Document Sharing Hub
This PDF Standard downloaded from www.bzfxw.com
Full document details: UL 498 2008

3 Components

3.1 Except as indicated in 3.2, a component of a product covered by this standard shall comply with the requirements for that component. See Appendix A for a list of standards covering components generally used in the products covered by this standard.

3.2 A component is not required to comply with a specific requirement that:

a) Involves a feature or characteristic not required in the application of the component in the product covered by this standard, or

b) Is superseded by a requirement in this standard.

3.3 A component shall be used in accordance with its rating established for the intended conditions of use.

3.4 Specific components are incomplete in construction features or restricted in performance capabilities. Such components are intended for use only under limited conditions, such as certain temperatures not exceeding specified limits, and shall be used only under those specific conditions.

4 Units of Measurement

4.1 When a value for measurement is followed by a value in other units in parentheses, the first stated value is the requirement.

5 References

5.1 Any undated reference to a code or standard appearing in the requirements of this standard shall be interpreted as referring to the latest edition of that code or standard.

CONSTRUCTION

ALL DEVICES

6 General

6.1 The ratings mentioned throughout this standard including those mentioned in Table 162.1 represent maximum ampacity and maximum operating potential in volts for receptacles and other outlet devices such as cord connectors or current taps.

6.2 A device is considered to be for use on either alternating or direct current unless the rating includes the letters ″ac″ to restrict the use to alternating current.

Documents
Document Sharing Hub

Full document details: UL 498 2008

7 Configurations

7.1 The NEMA configurations of various attachment plug and receptacle combinations referenced in this standard are in accordance with Wiring Devices – Dimensional Specifications, ANSI/NEMA WD6, and are included in Appendix B for ease of reference. The figures referenced as Section C3 contain non-NEMA configurations and are found in the Standard for Wiring Device Configurations, UL 1681.

8 Insulating Materials

8.1 General

8.1.1 All parts that act as the electrical insulation or enclosure of a device shall be made of an insulating material intended for the particular application and shall comply with the requirements in 8.2.1 – 8.4.1. Hard rubber shall not be employed.

Exception No. 1: The internal insulating systems of components where component requirements exist are not required to comply with the requirements in 8.2.1 – 8.4.1.

Exception No. 2: A small part meeting all of the following criteria is not required to comply with the requirements in 8.2.1 – 8.4.1:

a) Its volume does not exceed 0.122 cubic inch (2 cm^3),

b) Its maximum dimension does not exceed 1.18 inches (3 cm), and

c) Its location is such that it cannot propagate flame from one area to another or act as a bridge between a possible source of ignition and other ignitable parts.

Exception No. 3: Fiber or similar material that is equal to or less than 0.010 inch (0.25 mm) thick is not required to comply with the requirements in 8.2.1 – 8.4.1.

8.1.2 A polymeric material used for electrical insulation or enclosure of live parts shall be fabricated in accordance with the Standard for Polymeric Materials – Fabricated Parts, UL 746D.

Exception: A polymeric material that is fabricated in the same location where final assembly takes place and where no blending or compounding operations are involved is not required to comply with this requirement.

Documents
Document Sharing Hub
This PDF Standard downloaded from www.bzfxw.com
Full document details: UL 498 2008

8.2 Flammability

8.2.1 A polymeric material used for electrical insulation or enclosure of live parts shall have a flame class rating of HB, V-2, V-1, V-0, VTM-2, VTM-1, or VTM-0 in accordance with the requirements of the Standard for Tests for Flammability of Plastic Materials for Parts in Devices and Appliances, UL 94. The flame class rating of the material shall be judged at the minimum thickness employed at the walls and barriers in the device which are critical to the functioning of the insulation or enclosure of the device.

Exception: Insulating materials employed in a self-contained receptacle shall instead comply with 40.1.

8.3 Electrical properties

8.3.1 A polymeric material used for electrical insulation or enclosure of live parts shall have a Comparative Tracking Index (CTI) rating of 175 V or greater or a performance level class of at least 3.

Exception No. 1: A polymeric material used for electrical insulation or enclosure of live parts is not required to comply with this requirement if it complies with the Comparative Tracking Index Test, Section 55.

Exception No. 2: A polymeric material used in an enclosure that is separated through air by more than 1/32 inches (0.8 mm) from uninsulated live parts and more than 1/2 inch (12.7 mm) from arcing parts is not required to comply with this requirement.

8.3.2 A polymeric material used for electrical insulation or enclosure of live parts shall have Hot Wire Ignition (HWI) and High-Current Arc Resistance to Ignition (HAI) ratings or performance level classes of at least those shown in Table 8.1 for the flame class rating determined in accordance with 8.2.1. For materials with other than VTM flammability classifications, the HWI and HAI ratings of the material shall be evaluated using the specimen thickness employed in the end product or nominal 1/8 inch (3.2 mm) thickness, whichever is greater.

Exception No. 1: A polymeric material used for electrical insulation or enclosure of live parts is not required to comply with the HWI requirements if it complies with the Glow Wire Test, Section 56.

Exception No. 2: A polymeric material used for electrical insulation or enclosure of live parts is not required to comply with the HAI requirements if it complies with the High-Current Arc Resistance to Ignition Test, Section 57.

Exception No. 3: A polymeric material used in an enclosure of an attachment plug or cord connector which does not enclose live parts, or which encloses insulated live parts where the insulation thickness is greater than 0.028 inches (0.71 mm), is not required to comply with the HWI requirements.

Exception No. 4: A polymeric material used in an enclosure that is separated through air by more than 1/32 inches (0.8 mm) from uninsulated live parts and more than 1/2 inch (12.7 mm) from arcing parts is not required to comply with the HWI and HAI requirements.

Exception No. 5: Insulating materials employed in a self-contained receptacle shall instead comply with 40.1.

Documents
Document Sharing Hub
Full document details: UL 498 2008

Table 8.1
Hot wire ignition (HWI) and high-current arc resistance to ignition (HAI) ratings of insulating materials

Flammability classification[a]	HWI[b,d]		HAI[c,d]	
	Mean ignition time (sec)	PLC	Mean no. of arcs	PLC
V-0, VTM-0	7 and up to 15	4	15 and up to 30	3
V-1, VTM-1	15 and up to 30	3	15 and up to 30	3
V-2, VTM-2	15 and up to 30	3	15 and up to 30	3
HB	30 or more	2	60 or more	1

[a] Flammability classification – Described in the Standard for Tests for Flammability of Plastic Materials for Parts in Devices and Appliances, UL 94.

[b] Hot Wire Resistance to Ignition – Described in the Standard for Polymeric Materials – Short Term Property Evaluations, UL 746A.

[c] High-Current Arc Resistance to Ignition – Described in UL 746A.

[d] Mean ignition time and mean no. of arcs to be used to evaluate Filament Wound Tubing, Industrial Laminates, Vulcanized Fiber, and similar polymeric materials only. All other materials are to be judged using the performance level class values.

8.4 Thermal properties

8.4.1 A polymeric material used for electrical insulation or enclosure of live parts shall have the relative thermal index ratings shown in Table 8.2 for the specific application of the insulating material. For materials with other than VTM flammability classifications, the material shall be evaluated using the specimen thickness employed in the end product or nominal 1/8 inch (3.2 mm) thickness, whichever is greater.

Exception: The following generic materials having readings of 65 or less on the Shore Durometer D scale (when measured for 5 seconds at an ambient temperature of 23.0 ±2.0°C (73.4 ±3.6°F)) are acceptable for use at 60°C (140°F) based on their successful completion of the appropriate accelerated aging test described in Accelerated Aging Tests, Section 61:

a) Ethylene/Propylene/Diene (EPDM

b) Natural Rubber (NR)

c) Neoprene (Chloroprene Butadiene) Rubber (CBR)

d) Nitrile Rubber (NBR)

e) Polyvinyl Chloride (PVC) and its copolymers

f) Silicone Rubber (SIR)

g) Styrene (Butadiene) Rubber (SBR)

h) Thermo Elastomeric [TEE; includes Thermoplastic Elastomers (TPE) and Ethylene Propylene Thermoplastic Rubber (EPTR)]

Documents
Document Sharing Hub
This PDF Standard downloaded from www.bzfxw.com
Full document details: UL 498 2008

Table 8.2
Minimum relative thermal indices of insulating materials used in insulation and enclosure applications

Application	Minimum relative thermal index[a], Degrees C		
	Electrical	Mechanical with impact[b]	Mechanical without impact
Permanently-wired devices (including appliance, fixture and equipment outlets, inlets, and receptacles	80[c]	60[c]	80[c]
Cord-connected devices (including attachment plugs, cord connectors, and current taps)	60[c]	60[c]	60[c]

[a] Relative Thermal Index – Described in the Standard for Polymeric Materials – Long Term Property Evaluations, UL 746B.

[b] For industrial laminates, vulcanized fiber, and similar polymeric materials, the material's minimum RTI for Mechanical shall be evaluated using the values specified for Mechanical Without Impact.

[c] For devices containing fuses, the minimum thermal indices shall be the values shown above or the temperature measured on the insulating material during the Fuseholder Temperature Test, whichever is greater. See Sections 73, 83, 93, and 115.

8.5 Vulcanized fiber

8.5.1 Vulcanized fiber is not prohibited from being used for insulating washers, separators, and barriers, but shall not be used as the sole support of live parts.

8.5.2 Vulcanized fiber shall comply with the requirements in 8.2.1 – 8.4.1 and shall be moisture-resistant in accordance with 59.1 and 59.2.

8.6 Sealing compounds

8.6.1 A sealing compound shall be insulating, waterproof, and shall not soften at a temperature of 65°C (149°F). The softening point is to be determined using the Test Method for Softening Point by Ring-and-Ball Apparatus, ASTM E28.

8.6.2 Sulphur shall not be employed as a sealing compound.

8.7 Fuse enclosures

8.7.1 1 A fuse enclosure shall be of a moisture-resistant material in accordance with 59.1 and 59.2. Fiber and similar absorptive materials shall not be used for the enclosure of a fuse.

8.7.2 A polymeric material classified as Type V-0, V-1, or V-2 is considered as having flammability properties acceptable for use as the enclosure of a fuse.

Documents
Document Sharing Hub
Full document details: UL 498 2008

9 Enclosure

9.1 General

9.1.1 A device shall have live parts protected against exposure to contact by persons when fully assembled using all essential parts (described in 9.1.5) and installed in the intended manner.

Exception No. 1: Male blades which are energized only when mated with the corresponding outlet are not required to comply with this requirement.

Exception No. 2: Exposed wiring terminals or other live parts enclosed within equipment or within an outlet box when the device is installed in the intended manner are not required to comply with this requirement.

9.1.2 Accessible dead-metal parts of a grounding device shall be conductively connected to the grounding-conductor path through the device.

Exception: Accessible dead-metal parts electrically insulated from current-carrying parts are not required to comply with this requirement.

9.1.3 Accessible dead-metal parts of a nongrounding device shall be electrically insulated from live parts and wiring other than the complete flexible cord so that they are unable to be energized by stray strands, failure of wiring terminals (such as loosening of screws), or damaged or broken wiring. When the stray strand length affects whether a device complies with this requirement, the device shall be marked in accordance with Reference No. 3 to Table 163.1. See 9.1.7.

9.1.4 In order to judge the accessibility of a live or dead-metal part, the device is to be wired and assembled in accordance with the manufacturer's instructions, except that any nonessential parts (described in 9.1.6) that are able to be opened or removed by the user without using a tool are to be opened or removed. The probe shown in Figure 9.1 is to be applied with a force of not more than 3 lbf (13.3 N) to any depth that recessing will permit. The probe is to be rotated, changed in configuration, or angled before, during, and after application to any position that is necessary to examine the device. A live or dead-metal part is determined to be accessible when:

a) The part is contacted by the probe, or

b) The part is located in a hole larger than 7.1 mm (9/32 inch) in diameter and recessed less than 4.8 mm (3/16 inch).

Documents
Document Sharing Hub
This PDF Standard downloaded from www.bzfxw.com
Full document details: UL 498 2008

Figure 9.1
Articulate probe with web stop

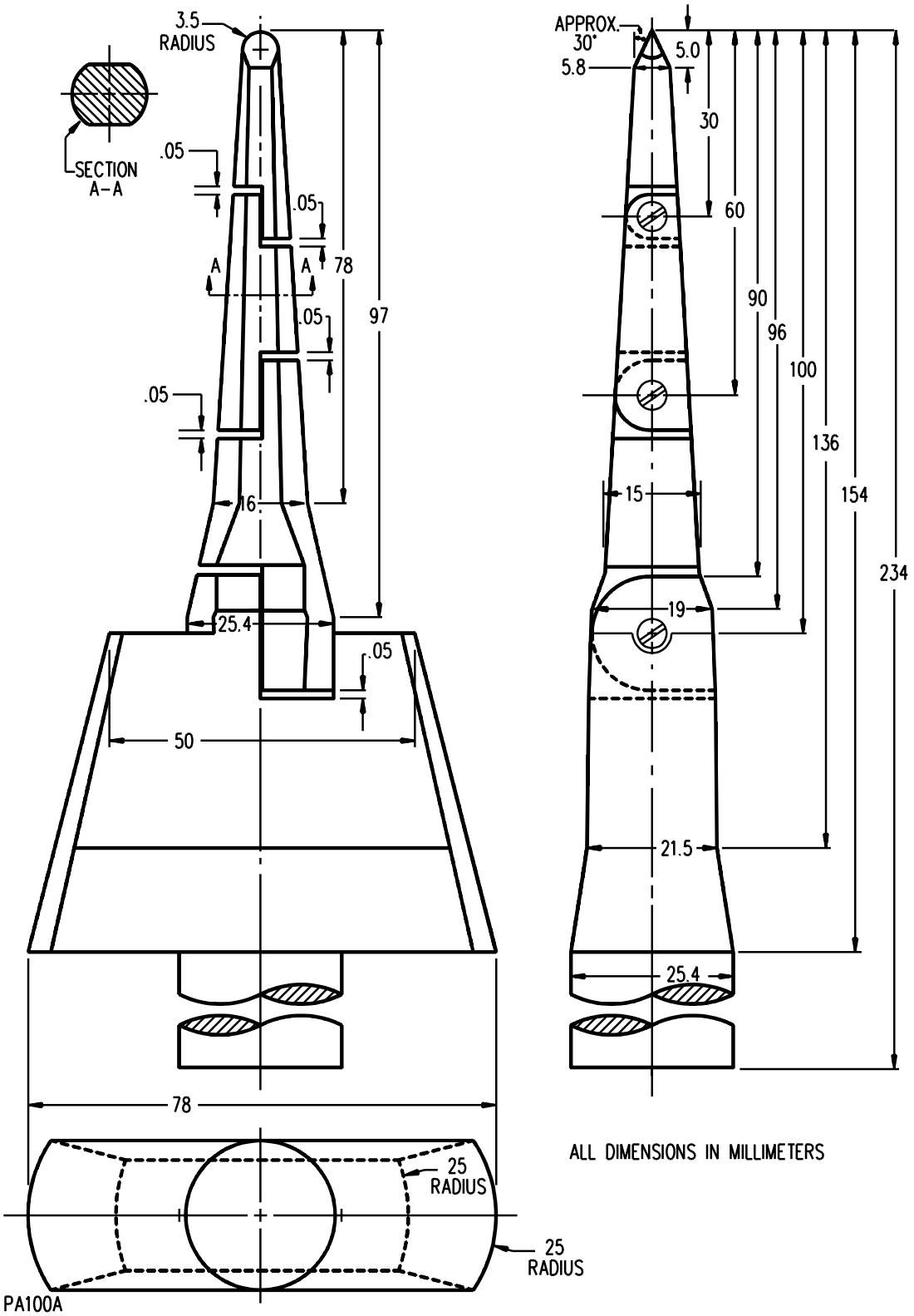

Documents
Document Sharing Hub
Full document details: UL 498 2008

9.1.5 A separable part is considered essential for the operation of the device if it employs a latch or detent or requires use of a tool to remove, and if it performs any of the following functions:

a) Encloses or completes the enclosure of current-carrying parts other than those on the male face of an attachment plug or current tap;

b) Encloses or completes the enclosure of the flexible cord from which the jacket has been removed for wiring;

c) Mechanically secures flexible cord to pin-type terminals; or

d) Provides for the placement and removal of a fuse.

9.1.6 A separable part (such as an insulating face cover, disc or strain relief clamp) is not considered essential for the operation of the device if it can be removed without the use of a tool or without defeating a latch or detent and if it performs any of the following functions:

a) Provides strain relief;

b) Encloses wiring terminals that would otherwise be exposed on the male face of an attachment plug or current tap; or

c) Provides access to a fuse through the male face of an attachment plug or current tap.

9.1.7 With respect to 9.1.5 (b), the enclosure of a flexible cord is not considered to be complete where two insulated conductors of a parallel-type cord are split apart or where the jacket is removed from the insulated conductors of a jacketed-type cord.

9.2 Male faces and wire terminations

9.2.1 The wire terminations of a 15 or 20 A attachment plug or current tap shall be completely enclosed when the device is wired on flexible cord and assembled as intended, using only those parts essential for the operation of the device (dead-front construction). See 9.1.5 and 9.1.6.

9.2.2 An exposed live part on the face of an attachment plug or current tap rated other than 15 or 20 A shall be provided with an insulating disc or face cover that is at least 0.028 inch (0.71 mm) thick and completely covers all exposed live parts. Any unfilled openings on a face cover or disc provided with multiple clearance openings to enable its use with a number of blade arrangements are to be located opposite the anticipated insulating face of the corresponding outlet device.

9.2.3 An insulating disc or face cover intended to be opened or removed to provide access to the wiring terminals shall be mechanically secured after wiring by one or more screws, latches, or detents that cannot be unintentionally opened or removed. A cover that is held in place by only friction without any positive detent action is not considered mechanically secured and is to be subjected to the Secureness-Of-Cover Test described in Section 67.

Documents
Document Sharing Hub
This PDF Standard downloaded from www.bzfxw.com
Full document details: UL 498 2008

9.2.4 An insulating disc or face cover shall enclose the wiring terminal compartments with a fit at the periphery that will not permit the entrance of a 0.030 inch diameter (0.76 mm) probe.

Exception: A notch may be provided in the cover to facilitate removal but only in areas remote from wiring terminals so that unclamped live strands cannot reach the opening. The notch is to comply with all of the following:

a) It shall not be deeper than 1/8 inch (3.2 mm) from the periphery;

b) It shall not be wider than 3/8 inch (9.5 mm) along the periphery of the cover; and

c) It shall not be located within 3/8 inch (9.5 mm) of the binding screw head as measured from the closest point in the notch periphery.

9.2.5 A device with a separable face cover shall be capable of being properly wired with the maximum size of the heaviest-duty type of flexible cord intended without inhibiting the full seating of the cover. The flexible cord used to determine compliance shall either:

a) Have an ampacity at least equal to the rating of the device configuration;

b) Be of the type and size marked on the device; or

c) Be of the maximum size that can be accommodated by the cord-entrance opening into the device.

9.2.6 An attachment plug or current tap with a separable face cover or disc shall be shipped with the cover attached to the device but not necessarily mechanically secured.

10 Current-Carrying Parts

10.1 General

10.1.1 Iron or steel, plated or unplated, shall not be used for parts that are depended upon to carry current.

Exception No. 1: Stainless steel may be employed for a part not subject to arcing.

Exception No. 2: A steel that is corrosion-resistant (stainless) or is protected against corrosion by cadmium plating, zinc plating, or an equivalent protective coating, may be used for wire-binding nuts and screws if these parts are not depended upon to carry current.

Exception No. 3: Iron or steel current-carrying parts employed on a flatiron or appliance plug are not prohibited when protected against corrosion by a metallic plating or other metal coating. See 47.1.

10.1.2 A current-carrying part shall be restricted from turning relative to the surface on which it is mounted if such turning would adversely affect the performance of the device.

Documents
Document Sharing Hub
Full document details: UL 498 2008

10.1.3 Uninsulated live parts shall be secured in place so that a reduction in the spacings below those required in 14.1 is not likely.

10.2 Contacts

10.2.1 Female contacts and associated live parts in the contact opening of an outlet device that can be touched by the probe illustrated in Figure 10.1 shall be recessed from the plane of the opening a distance not less than 1/4 of the maximum straight-line dimension of the opening, or 3/64 inch (1.2 mm), whichever is larger. That plane nearest the face of the device having the minimum opening for the pin or blade clearance is to be used to determine the minimum recess. Bevels, tapers, or other expansions of the opening to the face of the device do not affect the measurement. The probe in Figure 10.1 is to be inserted point first as far as possible in the opening without distorting the perimeter of the opening. The maximum straight-line dimension is the maximum-length straight-line that will fit within the opening at the plane of measurement.

Exception No. 1: A cord-connector having a 1-15R configuration shall comply with 23.1.1.

Exception No. 2: Devices having openings that close upon removal of the attachment plug are not required to comply with this requirement.

Exception No. 3: Specific-purpose devices intended only for disconnecting use (see 162.6), are not required to comply with this requirement.

Figure 10.1
Probe

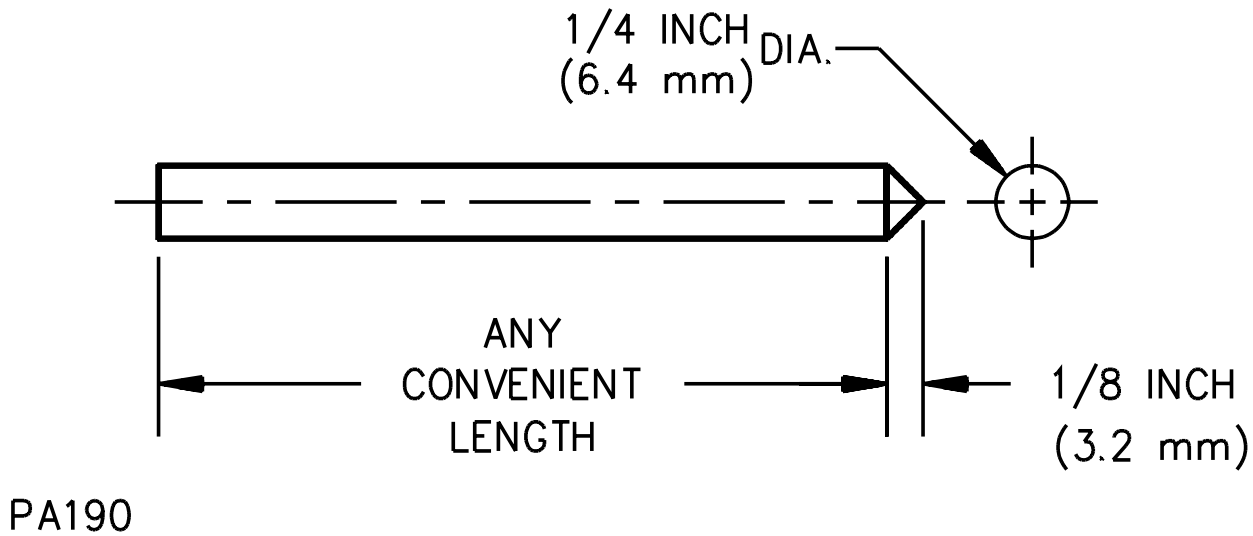

Documents
Document Sharing Hub
This PDF Standard downloaded from www.bzfxw.com
Full document details: UL 498 2008

11 Grounding and Dead Metal Parts

11.1 The following grounding parts shall be of copper or of a copper-base alloy:

a) The grounding pin, blade, or contact,

b) The grounding-conductor path through an attachment plug, current tap or cord connector, except for a metal housing or armor, and

c) The grounding-conductor path through a receptacle up to the strap, yoke, or other mounting means.

Exception: A rivet, bolt, or clamp that is used to secure parts in the grounding-conductor path, but which is not an essential conductor in the grounding-conductor path, may be of steel or its equivalent.

11.2 A copper-base-alloy rivet that is used to secure parts in the grounding-conductor path, or that forms a part of the grounding-conductor path, shall not contain less than 80 percent copper.

11.3 The grounding-conductor path connections in a grounding device shall be secured by riveting, bolting, welding, or equivalent means.

Exception: Another form of connection employed in a cord connector is not prohibited when the connection complies with the requirement in Potential Drop in Grounding Connections Test, Section 95.

11.4 The grounding pin, blade, or contact, of a grounding device shall be permanently attached to the body of the device.

Exception: A device in which the grounding member is mounted in soft rubber or similarly flexible material is not precluded by this requirement. The requirement contemplates that the element is to be secured in a manner so that it is not readily removable or movable.

11.5 Grounding and other dead metal parts shall be secured in place so that a reduction in spacings below those required in 14.1 is not likely.

11.6 The grounding terminal of a grounding device shall be connected to the contact that is intended for use for equipment grounding. For devices having one of the standard grounding configurations, the grounding contact is identified by the letter ″G″ in the corresponding figure in Wiring Devices – Dimensional Specifications, ANSI/NEMA WD6, and in the Standard for Wiring Device Configurations, UL 1681. The grounding terminal shall be permanently identified in accordance with 164.1.1 in a manner that is readily recognizable during installation. See also 19.1, 24.1, 29.1.2, and Section 164.

11.7 Dead-metal parts of a grounding device shall be conductively connected to the grounding-conductor path through the device. See 9.1.2.

Exception: Dead-metal parts isolated from current-carrying parts and wiring other than complete flexible cords (see 9.1.7) are not required to comply with this requirement.

Documents
Document Sharing Hub

Full document details: UL 498 2008

11.8 A conductive connection between a blade, pin, or contact, and an exposed dead-metal part capable of being grounded in service, such as the mounting strap, yoke, or body armor, shall be provided only in a grounding device. A nongrounding device with exposed dead-metal parts shall not be provided with a wiring terminal identified for an equipment grounding conductor. See also 19.4 and 24.2.

Exception: A nonstandard-configuration device that does not employ a dedicated grounding blade, pin, or contact, but which uses body armor or similar exposed metal parts as an equipment grounding conductor is not prohibited from being provided with an equipment grounding terminal only when the conductive connection between the grounding terminal and the exposed metal parts is obvious to the installer.

11.9 Dead metal parts of a device for use in nongrounding applications shall be insulated from live parts and wiring other than the complete flexible cord so that stray strands, failure of wiring terminals, or failure of wiring shall not energize accessible dead metal parts. See 9.1.3.

11.10 Iron or steel other than machine screws, washers, nuts, and stainless steel parts shall be protected against corrosion.

Exception: Parts determined to comply with 31.2.4 and 47.1, are not required to comply with this requirement.

12 Terminals

12.1 General

12.1.1 When a device is intended for the connection of conductors, a means shall be provided for connection such as a wire-binding screw or pressure-wire type wiring terminal, or a lead that is factory-assembled by means of soldering, welding, riveting or crimping. A wire-binding screw terminal shall not be used for the connection of circuit wires to a device rated more than 30 A and intended for connection to conductors greater than 10 AWG (5.3 mm^2).

Exception: Other forms of construction, such as push-in or insulation-displacement terminals, may be accepted if the mechanical features and current-carrying capability are equivalent to those of the connections mentioned above. See also 20.1.1, 25.1, 30.2.1, and 30.3.1.

12.1.1 revised November 16, 2007

12.1.2 A terminal provided for the field connection of a grounding conductor shall employ a mechanical clamping means that does not depend upon solder for the connection of the wire.

Documents
Document Sharing Hub
This PDF Standard downloaded from www.bzfxw.com
Full document details: UL 498 2008

12.2 Wire-binding screw terminals

12.2.1 A wiring terminal that involves a wire-binding screw shall have upturned lugs, or the equivalent, to hold a wire under the head of the screw.

12.2.2 A terminal plate that has a tapped hole for a wire-binding screw shall be of 0.030 inch (0.76 mm) or thicker metal and shall not have fewer than two full threads in the metal. A binding screw that has 32 or more threads per inch (per 25.4 mm) with a terminal plate formed from stock 0.030 inch (0.76 mm) thick, may have the metal extruded at the tapped hole to provide two full threads for the binding screw.

12.2.3 A wire-binding screw shall thread into metal.

12.2.4 The minimum size and maximum number of threads per inch (per 25.4 mm) for a wire-binding screw shall be as indicated in Table 12.1.

Table 12.1
Sizes of terminal screws

Rating of device in amperes	Minimum size of screw	Maximum number of threads per inch (per 25.4 mm)
15 or less	6[a]	36[c]
20	8[b]	32[c]
30	8	32

[a] No. 5-40 screws may be used on devices intended only for other than outlet-box use.

[b] No. 6-36 screws with a 0.296 inch diameter (7.52 mm) or larger head may be used for terminals on attachment plugs and cord connectors. On the device with a 5-20 configuration, the terminal screw that is used for connecting the grounding conductor to the outlet box shall not be smaller than No. 6-36.

[c] No. 8 or larger screws having more than the number of threads per inch (per 25.4 mm) indicated may be used for terminals when the assembly complies with the Tightening Torque Test, Section 64.

12.2.5 A receptacle or inlet rated 30 A or less and employing wire-binding screw terminals for connection to copper branch circuit conductors only, shall comply with the general performance requirements for receptacles, Sections 104 – 119, or the general performance requirements for inlets, Sections 80 – 83, as applicable.

12.2.6 In addition to the requirements in Sections 104 – 119, a receptacle rated 15 or 20 A and employing wire-binding screw terminals for connection to copper and/or aluminum branch circuit conductors shall comply with the CO/ALR Type requirements contained in 35.1.

Documents
Document Sharing Hub
Full document details: UL 498 2008

12.3 Soldering lugs

12.3.1 A terminal plate for a soldering lug shall be at least 0.050 in (1.27 mm) thick and shall not have fewer than two full threads in the metal for a terminal screw.

12.4 Pressure-wire terminals

12.4.1 A terminal plate for a pressure-wire terminal shall be at least 0.030 inch (0.76 mm) thick and shall not have fewer than two full threads in the metal for a terminal screw.

12.4.2 A pressure-wire terminal intended for the connection of branch circuit conductors to an inlet or receptacle shall be investigated in accordance with Table 12.2.

Table 12.2
Pressure-wire terminals used in receptacles and inlets

Use	Current rating	Pressure-wire terminal type	Reference paragraphs
Copper wire only	<30A	Clamp	84.2, 120.3
		Setscrew	12.4.3, 84.1, 120.2
	≥35A	Clamp	12.4.3, 84.1, 120.3
		Setscrew	12.4.3, 84.1, 120.3
Copper or aluminum wire	All	All	12.4.3, 36.1, 120.1

12.4.3 The tightening torque for the pressure-wire terminals designated in Table 12.2 shall be specified by the device manufacturer and shall be marked as described in Reference No. 4 of Table 163.2 for inlets and Reference No. 17 of Table 163.4 for receptacles. The specified tightening torque shall not be less than 90 percent of the value employed in the static heating test in the Standard for Equipment Wiring Terminals for Use with Aluminum and/or Copper Conductors, UL 486E, for the maximum wire size corresponding to the ampere rating of the device.

Exception: A lesser torque value is not prohibited when the connector is investigated in accordance with the Standard for Wire Connectors, UL 486A-486B or UL 486E using the lesser assigned torque value.

12.4.3 revised November 16, 2007

Documents
Document Sharing Hub
This PDF Standard downloaded from www.bzfxw.com
Full document details: UL 498 2008

13 Cord Entry and Strain Relief

13.1 A device intended for connection to flexible cord shall be provided with a means of strain relief so that a pull on the flexible cord will not be transmitted directly to the wiring terminations. Acceptability of the strain relief means shall be determined by the test described in Integrity of Assembly Test, Sections 70 or 96.

Exception: The strain relief provided on a device intended solely for factory assembly to the conductors of a flexible cord shall be subjected to the Integrity of Assembly Test, Sections 70 or 96, but is not required to restrict a pull on the flexible cord from being transmitted directly to the wiring terminations when the conductors are terminated as described in 13.2 (a).

13.2 A device intended solely for factory assembly to the conductors of a flexible cord is to be connected to the conductors by:

a) Welding, riveting, crimping, or the equivalent, or

b) Soldering, when an offset or one or more right-angle bends in the conductor are employed so that a pull on the conductor will not be transmitted directly to the connection.

13.3 A device intended for use with Type SP, SPT, or other parallel-conductor flexible cord, shall be provided with one of the following means for securing the individual conductor insulation:

a) An integral strain relief, not external to the body of the device,

b) A means for snubbing, or

c) Space within the device for a strain-relief knot. If a knot is to be used, all surfaces on which the knot may bear shall be smooth and well-rounded.

13.4 The diameter of a round cord-entry hole or the minor axis of an oblong cord-entry hole provided on a device intended for use on Type SP, SPT, or other parallel-conductor flexible cord shall not be longer than 1/4 inch (6.4 mm).

13.5 A metal-covered device intended for connection to a flexible cord shall be provided with an insulating bushing of porcelain, phenolic or cold-molded composition, or other insulating material with equivalent properties.

Exception No. 1: Hard fiber is acceptable for the bushing if the fiber is not less than 3/64 inch (1.2 mm) thick, and it is so formed and secured in place that it will not be affected by ordinary conditions of moisture.

Exception No. 2: If the metal covering (armor) of a device is not in proximity to the cord-entry hole, and the insulating material of which the plug is made serves as a smooth, well-rounded bushing for a flexible cord, a separate insulating bushing is not required.

Exception No. 3: A metal-covered device with a metal cord grip intended specifically for use with a jacketed type of flexible cord, such as Type S or SJ is not required to have an insulating bushing.

Documents
Document Sharing Hub

Full document details: UL 498 2008

14 Spacings

14.1 The spacings maintained through air or over surface shall be a minimum 3/64 inch (1.2 mm) for a device rated 250 V or less, and a minimum 1/8 inch (3.2 mm) for a device rated more than 250 V, between the following:

a) Uninsulated live parts of opposite polarity;

b) An uninsulated live part and a dead-metal part that is likely to be grounded or exposed to contact by persons when the device is installed as intended, including a metal surface on which the device is mounted in the intended manner or a metal face plate used with a flush receptacle.

Exception No. 1: The grounding terminal of a flush receptacle shall instead comply with the spacing requirements in 31.2.1.

Exception No. 2: A self-contained receptacle shall instead comply with the spacing requirements in 39.1.

Exception No. 3: A dead-metal screw head, rivet, or the like, which is located in a hole not larger than 9/32 inch (7.1 mm) in diameter and recessed not less than 3/16 inch (4.8 mm) is not considered to be exposed to contact by persons after the device is installed in the intended manner.

14.2 In measuring a spacing, an isolated dead-metal part interposed between live parts of opposite polarity, or between a live part and a grounded or exposed dead-metal part, is considered to reduce the spacing by an amount equal to the dimension of the isolated dead-metal part in the direction of the measurement.

15 Assembly

15.1 General

15.1.1 A device shall be capable of being readily wired as intended.

15.1.2 Electrical contact shall be reliably maintained at any point at which a connection is made between current-carrying parts.

15.1.3 An outlet device shall have live parts protected against exposure to contact by persons when the outlet is assembled and installed as intended.

15.1.4 When internal connections exist in a multiple-outlet device, similar and corresponding contacts of individual outlets shall be connected together.

15.1.5 A device having female contacts shall be constructed so that a standard attachment plug of the same configuration and with maximum length blades is capable of seating properly without exposure of the blades between the plane of the face of the plug and the plane of the rim of the female contact device.

Exception: Exposure of the wide side of the blade for a distance of 1/32 inch (0.8 mm) or less (measured along the length of the blade) is acceptable, and exposure of the narrow side of the blade is acceptable if the exposed area is recessed for a distance not shorter than the length (measured along the blade) of the exposed area.

Documents
Document Sharing Hub
This PDF Standard downloaded from www.bzfxw.com
Full document details: UL 498 2008

15.2 Grounding and polarization

15.2.1 A grounding outlet device shall be so constructed that the grounding member of the corresponding attachment plug cannot be inserted by hand into any outlet slot to touch the live contact.

15.2.2 A device consisting of two or more pieces shall be such that polarization cannot be defeated by improper assembly during installation.

15.2.3 A cord connector or current tap having a 1-15R nonpolarized configuration shall not accommodate an attachment plug having polarized blades to the extent that the wider (polarized) blade can make electrical contact with either outlet device contact. Compliance shall be determined by the test described in Improper Insertion Test, Section 94.

15.2.4 A cord connector or current tap having a 1-15R polarized configuration shall not accommodate an attachment plug having polarized blades in other than the intended orientation to the extent that the wider (polarized) blade can make electrical contact with the contact of the narrower (non-polarized) slot. Compliance shall be determined by the test described in Improper Insertion Test, Section 94.

15.3 Mating and interchangeability

15.3.1 A general-use device, including any configuration illustrated in Wiring Devices – Dimensional Specifications, ANSI/NEMA WD6, or the Standard for Wiring Device Configurations, UL 1681, shall be constructed so that electrical continuity between respective and similarly marked terminals is established automatically when the mating plug and outlet device are connected together.

Exception No. 1: A 2-pole non-polarized device is not required to comply with this requirement

Exception No. 2: A special-purpose device for use in equipment where intermixed connections do not increase the risk of fire, electric shock, injury to persons, or damage to equipment, is not required to comply with this requirement.

15.3.2 An outlet device shall not accommodate an attachment plug other than one that is specifically intended for use with the outlet.

15.3.3 A male or female device that is capable of making a conductive connection with a female or male device of an established general-use design shall be constructed and rated for complete and correct interchangeability with the established design. An established general-use design is considered to include any of the following:

a) Any of the configurations outlined in Wiring Devices – Dimensional Specifications, ANSI/NEMA WD6;

b) Any of the configurations outlined in the Standard for Wiring Device Configurations, UL 1681;

c) Another configuration that is an American National Standard configuration; or

d) A special-purpose configuration that is acceptable for use in one of the wiring systems that complies with the National Electrical Code, ANSI/NFPA 70.

Documents
Document Sharing Hub

Full document details: UL 498 2008

Exception: A special-purpose receptacle configuration that will not accept any standard general-use plugs shall be permitted to accept a modified general-use plug that will also be accepted by the mating general-use receptacle. (For example, a receptacle for use in a hazardous location that is intended to supply hazardous-location equipment provided with a modified plug that may be used in either an ordinary or hazardous location.)

15.3.4 A male or female device of an established general-use design shall comply with the dimensions, spacings, and the relative arrangement of blade and contact slots required by one of the following:

a) Wiring Devices – Dimensional Specifications, ANSI/NEMA WD6;

b) The Standard for Wiring Device Configurations, UL 1681; or

c) Other American National Standard.

15.3.5 Attachment plugs, cord connectors, current taps, and receptacles that have different electrical ratings shall not be interchangeable with one another.

Exception No. 1: A 20-A outlet device is not prohibited from accommodating a 15-A attachment plug for a single and identical voltage rating only.

Exception No. 2: A special-purpose configuration that will not mate with a standard general-use configuration shall be permitted to have multiple current and voltage ratings if the device is intended for installation in facilities where it will be serviced only by qualified personnel, and where the configuration will be used on circuits with one of the device's rated currents, voltages and frequencies throughout the facility.

Exception No. 3: Plugs, cord connectors, and current taps for use on flexible cords, or that are provided with fuses, that have a lower current rating, as described in Exception No. 1 to 162.1, are not prohibited from mating with corresponding devices with the standard current rating and the identical voltage rating.

15.3.6 An outlet device having a nongrounding configuration shall not accept a grounding-type attachment plug.

Exception: The locking grounding device illustrated in Figure C3.8 and marked "Hospital Only" shall be permitted to be interchangeable with other nongrounding general-use devices which are not so marked.

Documents
Document Sharing Hub
This PDF Standard downloaded from www.bzfxw.com
Full document details: UL 498 2008

15.4 Fuseholders

15.4.1 An enclosure shall be provided for the fuse or fuses in a device intended to accommodate such components.

15.4.2 A fuse enclosure shall reduce the risk of persons unintentionally contacting uninsulated live parts of the fuse and fuseholder.

15.4.3 A fuse enclosure shall confine the effects of a fuse rupture to the interior of the enclosure.

15.4.4 A device intended for use with a branch-circuit type fuse shall not be capable of accommodating a fuse or fuses that have a rating lower than the maximum rating in volts for the device.

15.4.5 In a fusible device, there shall be provision for a fuse in each ungrounded conductor, but there shall be no provision for a fuse in any other conductor.

15.4.6 The construction of a fusible device that has male pins or blades shall be such that the fuse or fuses will not be removable when the pins or blades are in a receptacle.

Exception: A fusible attachment plug having a configuration that is not illustrated in Wiring Devices – Dimensional Specifications, ANSI/NEMA WD6, or in the Standard for Wiring Device Configurations, UL 1681, may be provided with a fuse or fuses which is removable when the pins or blades are in a receptacle when the attachment plug is marked in accordance with Reference No. 12 of Table 163.1.

15.4.7 A fusible outlet device, such as a receptacle or a cord connector, shall not have live parts exposed to contact by persons when a fuse is being removed or replaced.

15.5 Switches

15.5.1 A switch provided as a part of a wiring device shall comply with the Standard for General-Use Snap Switches, UL 20. A switch provided as part of a device intended for factory assembly as a component of end-use equipment shall comply either with the Standard for Special-Use Switches, UL 1054, or the Standard for Switches for Appliances, UL 61058-1A.

15.5.1 revised March 15, 2006

Documents
Document Sharing Hub

Full document details: UL 498 2008

ATTACHMENT PLUGS AND INLETS

16 Insulating Materials

16.1 An insulating plate employed for the backing of an inlet shall not be less than 1/32 inch (0.8 mm) thick and shall be moisture-resistant in accordance with 59.1 and 59.2. Phenolic composition or a similar material is acceptable for the insulating plate. Fiber may be employed if it is not less than 1/16 inch (1.6 mm) thick, is impregnated to resist the absorption of moisture in accordance with 59.1 and 59.2, and is not depended upon (by itself) to hold contacts or other live parts in place.

17 Enclosure

17.1 General

17.1.1 A general-use attachment plug shall not be provided with more than one cord-outlet hole.

17.1.2 A 2-pole attachment plug shall have a 2-inch (51-mm) or shorter overall length measured from the face of the plug to include any handle grip.

Exception: A 2-5/8 inch (66.7 mm) (maximum) overall length is acceptable for an attachment plug or current tap if the device:

a) Weighs less than 6 oz (170 g),

b) Is torsionally balanced about an axis that is perpendicular to the pin face and that is centered between the blades or pins, and

c) Has a center of gravity located on this axis no further than 1 inch (25.4 mm) from the pin face.

17.1.3 A 50-A attachment plug with a molded phenolic shell enclosing the wiring terminals is not acceptable in an application in which the attachment plug is likely to be subject to severe mechanical abuse.

17.2 Grip

17.2.1 An attachment plug having a 1-15P configuration for use on parallel or vacuum cleaner (SV, SVO, SVOO, SVT, SVTO, SVTOO, SVE, SVEO, and SVEOO) type flexible cord shall have a surface that facilitates gripping between the thumb and forefinger or some equivalent finger gripping means independent of the cord to provide for easy insertion and withdrawal from an outlet. See Attachment Plug Grip Tests, Section 69.

Documents
Document Sharing Hub
This PDF Standard downloaded from www.bzfxw.com
Full document details: UL 498 2006

17.3 Face size

17.3.1 The perimeter of the face of an attachment plug having a 1-15P configuration shall encompass an area equal to or larger than that indicated in Figure 17.1.

Documents
Document Sharing Hub

Full document details: UL 498 2008

No Text on This Page

Documents
Document Sharing Hub
This PDF Standard downloaded from www.bzfxw.com
Full document details: UL 498 2006