UL 498F

STANDARD FOR SAFETY

Plugs, Socket-Outlets and Couplers with Arcuate (Locking Type) Contacts

Documents
Document Sharing Hub

Full document details: UL 498F 2021

Documents
Document Sharing Hub

Full document details: UL 498F 2021

UL Standard for Safety for Plugs, Socket-Outlets and Couplers with Arcuate (Locking Type) Contacts, UL 498F

First Edition, Dated July 29, 2020

SUMMARY OF TOPICS

This revision of ANSI/UL 498F dated September 21, 2021 includes a revision to the Spring Action Terminals requirements; 12.6.1, 12.6.4, 19.3.2, Section 23A, Table 34.1, Table 34.3, Section 49A, Section 62A, Table 89.1, Table 89.3

Text that has been changed in any manner or impacted by UL's electronic publishing system is marked with a vertical line in the margin.

The new and revised requirements are substantially in accordance with Proposal(s) on this subject dated July 16, 2021.

All rights reserved. No part of this publication may be reproduced, stored in a retrieval system, or transmitted in any form by any means, electronic, mechanical photocopying, recording, or otherwise without prior permission of UL.

UL provides this Standard "as is" without warranty of any kind, either expressed or implied, including but not limited to, the implied warranties of merchantability or fitness for any purpose.

In no event will UL be liable for any special, incidental, consequential, indirect or similar damages, including loss of profits, lost savings, loss of data, or any other damages arising out of the use of or the inability to use this Standard, even if UL or an authorized UL representative has been advised of the possibility of such damage. In no event shall UL's liability for any damage ever exceed the price paid for this Standard, regardless of the form of the claim.

Users of the electronic versions of UL's Standards for Safety agree to defend, indemnify, and hold UL harmless from and against any loss, expense, liability, damage, claim, or judgment (including reasonable attorney's fees) resulting from any error or deviation introduced while purchaser is storing an electronic Standard on the purchaser's computer system.

Documents
Document Sharing Hub

Full document details: UL 498F 2021

No Text on This Page

Documents
Document Sharing Hub

Full document details: UL 498F 2021

JULY 29, 2020
(Title Page Reprinted: September 21, 2021)

ANSI/UL 498F-2021

UL 498F

Standard for Plugs, Socket-Outlets and Couplers with Arcuate (Locking Type) Contacts

First Edition

July 29, 2020

This ANSI/UL Standard for Safety consists of the First Edition including revisions through September 21, 2021.

The most recent designation of ANSI/UL 498F as an American National Standard (ANSI) occurred on September 20, 2021. ANSI approval for a standard does not include the Cover Page, Transmittal Pages, and Title Page.

Comments or proposals for revisions on any part of the Standard may be submitted to UL at any time. Proposals should be submitted via a Proposal Request in UL's On-Line Collaborative Standards Development System (CSDS) at https://csds.ul.com.

UL's Standards for Safety are copyrighted by UL. Neither a printed nor electronic copy of a Standard should be altered in any way. All of UL's Standards and all copyrights, ownerships, and rights regarding those Standards shall remain the sole and exclusive property of UL.

COPYRIGHT © 2021 UNDERWRITERS LABORATORIES INC.

Documents
Document Sharing Hub

Full document details: UL 498F 2021

No Text on This Page

Documents
Document Sharing Hub

Full document details: UL 498F 2021

CONTENTS

INTRODUCTION

1 Scope 7
2 Components 8
3 Units of Measurement 8
4 Referenced Publications 8
5 Glossary 9

CONSTRUCTION

6 All Devices 12
7 Configurations 12
8 Insulating Materials 12
8.1 General 12
8.2 Flammability 13
8.3 Electrical properties 13
8.4 Thermal properties 14
8.5 Vulcanized fiber 15
8.6 Sealing compounds 15
8.7 Fuse enclosures 15
9 Enclosure 15
9.1 General 15
9.2 Male faces and wire terminations 18
10 Current-Carrying Parts 19
10.1 General 19
10.2 Contacts 19
11 Grounding and Dead Metal Parts 20
12 Terminals 21
12.1 General 21
12.2 Wire-binding screw terminals 22
12.3 Soldering lugs 22
12.4 Pressure-wire terminals 22
12.5 Combination wire binding/pressure-wire terminals 23
12.6 Spring action clamp terminals 23
13 Cord Entry and Strain Relief 23
14 Spacings 24
15 Assembly 25
15.1 General 25
15.2 Grounding and polarization 25
15.3 Mating and interchangeability 25
15.4 Fuseholders 26
15.5 Switches 27

ATTACHMENT PLUGS AND INLETS

16 Insulating Materials 27
17 Enclosure 27
17.1 General 27
17.2 Configurable plug 27
18 Grounding and Dead Metal Parts 28
19 Terminals and Leads 29
19.1 Terminals 29
19.2 Leads 29

AVA Documents
Document Sharing Hub
Full document details: UL 498F 2021

19.3 Attachment plug and inlet with spring action clamp terminal 29
20 Assembly 29
21 Weatherproof Type 30

CORD CONNECTORS

22 Grounding and Dead Metal Parts 30
23 Assembly 31
23A Cord Connector with Spring Action Clamp Terminal 31

RECEPTACLES

24 Insulating Materials 31
25 Enclosure 31
26 Grounding and Dead Metal Parts 31
26.1 General 31
26.2 Flush receptacles 32
27 Terminals and Leads 32
27.1 General 32
27.2 Leads 32
27.3 Separable terminal assembly 33
27.4 Receptacle with spring action clamp terminal 33
28 Assembly 33
28.1 General 33
28.2 Flush receptacles 33
28.3 Surface-mount receptacles 35
29 Flush Plates 35
30 Self-Grounding Receptacles 35
31 Isolated-Ground Receptacles 36
32 Pendant Receptacles 36
33 Lighted Receptacle 36

PERFORMANCE

34 Representative Devices 36

ALL DEVICES

35 Comparative Tracking Index Test 41
36 Glow Wire Test 41
37 High-Current Arc Resistance to Ignition Test 41
38 Mold Stress Relief Test 42
39 Moisture Absorption Resistance Test 43
40 Dielectric Voltage-Withstand Test 43
40.1 Devices for fixed or permanent installation 43
40.2 Cord-connected devices 44
41 Accelerated Aging Tests 44
41.1 General 44
41.2 Rubber, EPDM, and TEE compounds 44
41.3 PVC compounds and copolymers 45
42 Insulation Resistance Test 45
43 Conductor Secureness Test 45
44 Tightening Torque Test 46

Documents
Document Sharing Hub
Full document details: UL 498F 2021

ATTACHMENT PLUGS

45 All Devices....46
46 Self-Hinged Plugs....46
47 Secureness-Of-Cover Test....46
48 Integrity of Assembly Test....46
48.1 General....46
48.2 Self-hinged plugs....47
48.3 Self-hinge flexing test....47
49 Terminal Temperature Test....47
49A Spring Action Clamp Terminal Pull Test....48
50 Fuseholder Temperature Test....49

INLETS

51 All Devices....50
52 Terminal Temperature Test....50
53 Fuseholder Temperature Test....51
54 Pressure-Wire Terminals....52
55 Combination Wire Binding/Pressure Wire-Type Terminals....52
56 Strength of Insulating Base Test....53
57 Spring Action Clamp Terminal Pull Test....53

CORD CONNECTORS

58 All Devices....54
59 Overload Tests....54
59.1 General....54
59.2 Current overload test....55
59.3 Horsepower overload test....56
60 Temperature Test....57
61 Resistance to Arcing Test....57
62 Fuseholder Temperature Test....58
62A Spring Action Clamp Terminal Pull Test....59
63 Potential Drop in Grounding Connections Test....60
64 Integrity of Assembly Test....60
65 Self-Hinged Cord Connectors....60
66 Self-Hinge Flexing Test....60

RECEPTACLES

67 All Devices....61
68 Overload Test....61
68.1 General....61
68.2 Current overload test....62
68.3 Horsepower overload test....63
69 Temperature Test....64
69.1 Contact and terminal temperature....64
69.2 Feed-through terminal temperature....65
70 Resistance to Arcing Test....65
71 Fuseholder Temperature Test....65
72 Pressure-Wire Terminals....66
73 Combination Wire Binding/Pressure Wire-Type Terminals....67
74 Strength of Insulating Base Test....67
75 Spring Action Clamp Terminal Pull Test....68

Documents
Document Sharing Hub
Full document details: UL 498F 2021

76 Self-Grounding Receptacles 68
77 Fault Current Test 68
78 Receptacles Employing a Separable Terminal Assembly 71
79 Retention of Tab Connection Test 71
80 Separable Connector Pull Test 71
81 Mold Stress Relief Test 71
82 Dielectric Voltage-Withstand Test 72
83 Grounding Contact Temperature Test 72
84 Resistance Test 73
85 Latching Mechanism Test 73
86 Short Circuit Test 73
87 Continuity Impedance Test 74

RATINGS

88 Details 74

MARKINGS AND INSTRUCTIONS

89 Details 75
90 Location of Markings and Instructions 83
91 Identification and Marking of Terminals 84
91.1 Grounded and grounding 84
91.2 Other terminals 85
91.3 Removable parts 85

ANNEX A (NORMATIVE) Wiring Device Configurations

Documents
Document Sharing Hub
Full document details: UL 498F 2021

INTRODUCTION

1 Scope

1.1 These requirements cover plugs, socket outlets (receptacles), couplers, cord connectors, and inlets, with arcuate contacts (locking-type configurations), rated 20 or 30 A grounding type only. All intended for connection to a branch circuit for use in accordance with the National Electrical Code, ANSI/NFPA 70.

1.2 These requirements do not cover plugs, socket outlets (receptacles), couplers, cord connectors, and inlets with arcuate contacts (locking-type configurations) rated 20 and 30 A non-grounding type, or devices rated 15, 50 or 60 A grounding or non-grounding type, refer to UL 498D Standard.

1.3 These requirements do not cover devices rated at more than 200 A or for more than 600 V. See 6.1.

1.4 This Standard does not directly apply to, but supplements the following standards:

a) Straight-blade attachment plugs, receptacles, cord connectors, and inlets, covered by the Standard for Attachment Plugs and Receptacles, UL 498;

b) Attachment plugs, receptacles, cord connectors, and inlets with arcuate contacts (locking-type configurations) – Enclosure Types for Environmental Protection, UL 498E;

c) Inlets with arcuate contacts (locking-type configurations) – Marine Shore Power Inlets, UL 498M;

d) Devices produced integrally with flexible cord or cable, covered by the Standard for Cord Sets and Power-Supply Cords, UL 817;

e) Current taps and adapters not provided with wiring terminals for flexible cord covered by the Standard for Current Taps and Adapters, UL 498A;

f) Devices employing male or female screwshells, covered by the Standard for Lampholders, UL 496;

g) Devices solely intended for direct connection to the branch circuit in accordance with the National Electrical Code, ANSI/NFPA 70, that are provided with contacts of the pin and sleeve type, covered by the Standard for Plugs, Receptacles and Cable Connectors of the Pin-and-Sleeve Type, UL 1682;

h) Single and multipole connectors intended for factory assembly to copper or copper alloy conductors or printed wiring boards for use in data, signal, control and power applications within and between electrical equipment, covered by the Standard for Component Connectors for Use in Data, Signal, Control and Power Applications, UL 1977;

i) Devices intended for installation and use in hazardous (classified) locations in accordance with the National Electrical Code, ANSI/NFPA 70, covered by the Standard for Explosion-Proof and Dust-Ignition-Proof Electrical Equipment for Use in Hazardous (Classified) Locations, UL 1203;

j) Devices intended for use with telecommunications networks, covered by the Standard for Information Technology Equipment – Safety – Part 1: General Requirements, UL 60950-1, or the Standard for Communications Circuit Accessories, UL 1863;

k) Devices incorporating ground-fault circuit interruption circuitry, covered by the Standard for Ground-Fault Circuit Interrupters, UL 943;

l) Single- or two-outlet direct plug-in devices incorporating transient voltage surge suppression circuitry, covered by the Standard for Surge Protective Devices, UL 1449;

AVA Documents
Document Sharing Hub
Full document details: UL 498F 2021

m) Single- or two-outlet direct plug-in devices incorporating electromagnetic interference filter circuitry, covered by the Standard for Electromagnetic Interference Filters, UL 1283;

n) Cord-connected, relocatable power taps intended only for indoor use as a temporary extension of a grounding alternating-current branch circuit for general use, covered by the Standard for Relocatable Power Taps, UL 1363; or

o) Single pole locking-type separable connectors, covered by the Standard for Single Pole Locking-Type Separable Connectors, UL 1691.

2 Components

2.1 A component of a product covered by this Standard shall:

a) Comply with the requirements for that component as specified in this Standard;

b) Be used in accordance with its rating(s) established for the intended conditions of use; and

c) Be used within its established use limitations or conditions of acceptability.

2.2 A component of a product covered by this Standard is not required to comply with a specific component requirement that:

a) Involves a feature or characteristic not required in the application of the component in the product;

b) Is superseded by a requirement in this Standard; or

c) Is separately investigated when forming part of another component, provided the component is used within its established ratings and limitations.

2.3 Specific components are incomplete in construction features or restricted in performance capabilities. Such components are intended for use only under limited conditions, such as certain temperatures not exceeding specified limits, and shall be used only under those specific conditions.

2.4 A component that is also intended to perform other functions such as overcurrent protection, ground-fault circuit-interruption, surge suppression, any other similar functions, or any combination thereof, shall comply additionally with the requirements of the applicable UL standard(s) that cover devices that provide those functions.

3 Units of Measurement

3.1 Values stated without parentheses are the requirement. Values in parentheses are explanatory or approximate information.

4 Referenced Publications

4.1 Any undated reference to a code or standard appearing in the requirements of this Standard shall be interpreted as referring to the latest edition of that code or standard.

4.2 The following publications are referenced in this Standard:

ANSI/NEMA WD6, *Wiring Devices – Dimensional Specifications*
ANSI/NFPA 70, *National Electrical Code*
ASTM D 570, *Test Method for Water Absorption of Plastics*

Documents
Document Sharing Hub
Full document details: UL 498F 2021

ASTM E28, *Standard Test Methods for Softening Point of Resins Derived from Naval Stores by Ring-and-Ball Apparatus*
UL 20, *Standard for General-Use Snap Switches*
UL 94, *Standard for Tests for Flammability of Plastic Materials for Parts in Devices and Appliances*
UL 98, *Standard for Enclosed and Dead-Front Switches*
UL 486A-486B, *Standard for Wire Connectors*
UL 486E, *Standard for Equipment Wiring Terminals for Use with Aluminum and/or Copper Conductors*
UL 496, *Standard for Lampholders*
UL 498, *Standard for Attachment Plugs and Receptacles*
UL 498A, *Standard for Current Taps and Adapters*
UL 498D, *Standard for Attachment Plugs, Cord Connectors and Receptacles with Arcuate (Locking Type) Contacts*
UL 498E, *Standard for Attachment Plugs, Cord Connectors and Receptacles – Enclosure Types for Environmental Protection*
UL 498M, *Standard for Marine Shore Power Inlets*
UL 514A, *Standard for Metallic Outlet Boxes*
UL 514B, *Standard for Conduit, Tubing, and Cable Fittings*
UL 514C, *Standard for Nonmetallic Outlet Boxes, Flush-Device Boxes, and Covers*
UL 746A, *Standard for Polymeric Materials – Short Term Property Evaluations*
UL 746B, *Standard for Polymeric Materials – Long Term Property Evaluations*
UL 746C, *Standard for Polymeric Materials – Use in Electrical Equipment Evaluations*
UL 746D, *Standard for Polymeric Materials – Fabricated Parts*
UL 796, *Standard for Printed-Wiring Boards*
UL 817, *Standard for Cord Sets and Power-Supply Cords*
UL 943, *Standard for Ground-Fault Circuit Interrupters*
UL 969, *Standard for Marking and Labeling Systems*
UL 1203, *Standard for Explosion-Proof and Dust-Ignition-Proof Electrical Equipment for Use in Hazardous (Classified) Locations*
UL 1283, *Standard for Electromagnetic Interference Filters*
UL 1363, *Standard for Relocatable Power Taps*
UL 1449, *Standard for Surge Protective Devices*
UL 1681, *Standard for Wiring Device Configurations*
UL 1682, *Standard for Plugs, Receptacles and Cable Connectors of the Pin-and-Sleeve Type*
UL 1691, *Standard for Single Pole Locking-Type Separable Connectors*
UL 1863, *Standard for Communications Circuit Accessories*
UL 1977, *Standard for Component Connectors for Use in Data, Signal, Control and Power Applications*
UL 4248-1, *Standard for Fuseholders – Part 1: General Requirements*
UL 4248-4, *Standard for Fuseholders – Part 4: Class CC*
UL 4248-5, *Standard for Fuseholders – Part 5: Class G*
UL 4248-6, *Standard for Fuseholders – Part 6: Class H*
UL 4248-8, *Standard for Fuseholders – Part 8: Class J*
UL 4248-9, *Standard for Fuseholders – Part 9: Class K*
UL 4248-11, *Standard for Fuseholders – Part 11: Type C (Edison Base) and Type S Plug Fuse*
UL 4248-12, *Standard for Fuseholders – Part 12: Class R*
UL 4248-15, *Standard for Fuseholders – Part 15: Class T*
UL 60950-1, *Standard for Information Technology Equipment – Safety – Part 1: General Requirements*
UL 61058-1, *Standard for Switches for Appliances – Part 1: General Requirements*

5 Glossary

5.1 For the purposes of this Standard, the following definitions apply.

5.2 APPLIANCE COUPLER – A single-outlet, female contact device for attachment to a flexible cord as part of a detachable power-supply cord to be connected to an inlet (motor attachment plug).

Documents
Document Sharing Hub
Full document details: UL 498F 2021

5.3 ATTACHMENT PLUG – A male contact device for the temporary connection of a flexible cord or cable to a receptacle, cord connector, flanged equipment power outlet, or other outlet device.

5.4 BULK SHIPMENT – Any packaging container having more than one receptacle not provided with a unit container.

5.5 CONFIGURATION, LOCKING – A device having a configuration that requires a motion other than a straight push or pull to connect or separate it when used with its mating part.

5.6 CORD CONNECTOR – A female contact device to be wired on flexible cord for use as an extension from an outlet to make a detachable electrical connection to an attachment plug or, as an appliance coupler, to an equipment inlet.

5.7 ELECTRICAL (FUNCTIONAL) INSULATION – The insulation necessary for the proper functioning of the product and for basic protection against electrical shock. This includes all parts relied upon to support live parts in place, all internal barriers necessary to maintain spacings, and the outlet face portion of all female devices.

5.8 ENCLOSURE – That part of the device that renders inaccessible all or any parts of the device that may otherwise present a risk of electric shock, retards propagation of flame initiated by electrical disturbances occurring within, or both.

5.9 FIXTURE, EQUIPMENT, OR APPLIANCE OUTLET – A receptacle outlet device for mounting on utilization equipment.

5.10 GROUNDING-CONDUCTOR PATH – A path between the grounding pin, blade, or contact and the grounding terminal or, if the device has no grounding terminal, the point at which the path makes contact with a part of the metal raceway system, such as a box, box cover, or the raceway itself.

5.11 GROUNDING DEVICE – A device having a L5-15, L6-15, TT-R, or ML-2R configuration, the standard configuration illustrated in the Hospital Use Only 2-Pole, 3-Wire Grounding-Type Locking Devices Rated 20 A, 125 V, Figure C1.1 of UL 1681, or a nonstandard configuration that employs one blade, pin, or contact exclusively for grounding.

5.12 HOUSING ADAPTER, ANGLE – A part that is intended to replace a portion of an attachment plug or cord connector housing so that the flexible cord exits the strain relief in the same plane as the face of the device.

5.13 HOUSING ADAPTER, SHROUD – A part that is intended to be assembled onto an attachment plug or cord connector to extend the housing beyond the plane of the face of the device.

5.14 INLET – (Motor Attachment Plug) A male contact device to be mounted on utilization equipment to provide an integral blade configuration for the connection of an appliance coupler or cord connector.

5.15 POLARIZED DEVICE – A device constructed for connection to a mating device only in the position that connects related poles of an electrical circuit.

5.16 RECEPTACLE, DUPLEX – A receptacle having two contact devices on a single mounting yoke for flush mounting in a plane surface.

5.17 RECEPTACLE, FLUSH – A receptacle which is intended for mounting in or on an outlet box, an outlet-box cover, or a flush-device cover plate for fixed installation on a branch circuit.

Documents
Document Sharing Hub
Full document details: UL 498F 2021

5.18 RECEPTACLE, ISOLATED GROUND – A receptacle having the grounding terminal electrically isolated from the system ground when installed in a metallic outlet box or raceway system.

5.19 RECEPTACLE, LIGHTED – A receptacle employing an integral lens (jewel) and electrical or electronic components that produce light. Two basic types:

a) Power Indicator type – Illuminates to indicate power is on.

b) Illuminated/Nightlight – Illuminates when power is on and may not when controlled by a photoelectric sensor.

5.20 RECEPTACLE, PENDANT – Pendant receptacles include an enclosure with cover plate and strain relief means, intended to be assembled at the end of flexible cord, for use in branch circuit applications.

5.21 RECEPTACLE, SELF-GROUNDING – A receptacle which includes a spring clip or other part to provide for electrical continuity between the grounded device yoke and the mounting screw.

5.22 RECEPTACLE, SPLIT – A duplex receptacle having line terminals which are capable of being electrically separated.

5.23 RECEPTACLE, SURFACE-MOUNT – A receptacle which includes an enclosure and mounting means intended for surface mounting without the use of a separate outlet box in accordance with ANSI/NFPA 70.

5.24 TERMINAL, PRESSURE-WIRE – A terminal which establishes a connection between one or more conductors and a terminal plate by means of mechanical pressure without the use of solder. A pressure-wire terminal may be either of the following types:

a) Clamp-Type – A pressure-wire terminal in which the conductor is held under a pressure plate or saddle clamp by one or more screws. This type of terminal may be provided in combination with a wire-binding screw terminal.

b) Setscrew-Type – A pressure-wire terminal in which the pressure is applied by the end of the screw bearing on the conductor, either directly or through a wire-protecting pad.

c) Combination Wire Binding/Pressure-Type – A wire binding screw with an integrally machined pressure ring. Pressure ring terminals accept both single and multiple conductors that are captured under the machine formed pressure ring. These terminals may be wired with a single conductor using the conventional 3/4 loop around the wire-binding screw.

5.25 TERMINAL, SPRING ACTION CLAMP – A terminal where the stripped end of a conductor is inserted into the terminal and a manually operated integral lever applies clamping pressure to a spring mechanism, without the use of screws.

5.26 TERMINAL, WIRE-BINDING SCREW – A terminal in which the conductor is bent around the screw and is clamped directly under the head of the screw when it is tightened.

5.27 TERMINAL ASSEMBLY, SEPARABLE – A two-piece terminal assembly provided with an integral mechanical latching mechanism(s). It consists of permanently attached pins or tabs located on the body of the receptacle and is capable of receiving a special purpose connector with leads for connection to the branch circuit.

5.28 THROUGH-WIRING – A wiring method which permits a group of receptacles to be wired in parallel to a common branch circuit.

Documents
Document Sharing Hub

Full document details: UL 498F 2021

5.29 UNIT CONTAINER – The smallest carton, package, or container, in which a receptacle is packaged. A unit container may contain more than one receptacle if they are not intended to be removed from the container for individual sale.

CONSTRUCTION

6 All Devices

6.1 The ratings mentioned throughout this Standard including those mentioned in Table 88.1 represent maximum ampacity and maximum operating potential in volts for receptacles and other outlet devices such as cord connectors or current taps.

6.2 A device is considered to be for use on either alternating or direct current unless the rating includes the letters "ac" to restrict the use to alternating current.

7 Configurations

7.1 The NEMA configurations of various attachment plug and receptacle combinations referenced in this Standard are in accordance with ANSI/NEMA WD6, and are included in Annex A for ease of reference. The figures referenced as Section C1 contain non-NEMA configurations and are found in UL 1681.

8 Insulating Materials

8.1 General

8.1.1 All parts that act as the electrical insulation or enclosure of a device shall be made of an insulating material intended for the particular application and shall comply with the requirements in 8.2.1 – 8.4.1. Hard rubber shall not be employed.

Exception No. 1: The internal insulating systems of components where component requirements exist are not required to comply with the requirements in 8.2.1 – 8.4.1.

Exception No. 2: A small part meeting all of the following criteria is not required to comply with the requirements in 8.2.1 – 8.4.1:

a) Its volume does not exceed 0.122 cubic inch (2 cm^3),

b) Its maximum dimension does not exceed 1.18 inches (3 cm), and

c) Its location is such that it cannot propagate flame from one area to another or act as a bridge between a possible source of ignition and other ignitable parts.

Exception No. 3: Fiber or similar material that is equal to or less than 0.010 inch (0.25 mm) thick is not required to comply with the requirements in 8.2.1 – 8.4.1.

8.1.2 A polymeric material used for electrical insulation or enclosure of live parts shall be fabricated in accordance with UL 746D.

Exception: A polymeric material that is fabricated in the same location where final assembly takes place and where no blending or compounding operations are involved is not required to comply with this requirement.

Documents
Document Sharing Hub
Full document details: UL 498F 2021

8.2 Flammability

8.2.1 A polymeric material used for electrical insulation or enclosure of live parts shall have a flame class rating of HB, V-2, V-1, V-0, VTM-2, VTM-1, or VTM-0 in accordance with the requirements of UL 94. The flame class rating of the material shall be judged at the minimum thickness employed at the walls and barriers in the device which are critical to the functioning of the insulation or enclosure of the device.

Exception: A polymeric material that complies with either the 3/4-inch (12 mm or 20 mm) flame flammability test described in UL 746C, need not have a flammability class rating.

8.3 Electrical properties

8.3.1 A polymeric material used for electrical insulation or enclosure of live parts shall have a Comparative Tracking Index (CTI) rating of 175 V or greater or a performance level class of at least 3.

Exception No. 1: A polymeric material used for electrical insulation or enclosure of live parts is not required to comply with this requirement if it complies with the Comparative Tracking Index Test, Section 35.

Exception No. 2: A polymeric material used in an enclosure that is separated through air by more than 1/32 inches (0.8 mm) from uninsulated live parts and more than 1/2 inch (12.7 mm) from arcing parts is not required to comply with this requirement.

8.3.2 A polymeric material used for electrical insulation or enclosure of live parts shall have Hot Wire Ignition (HWI) and High-Current Arc Resistance to Ignition (HAI) ratings or performance level classes of at least those shown in Table 8.1 for the flame class rating determined in accordance with 8.2.1. For materials with other than VTM flammability classifications, the HWI and HAI ratings of the material shall be evaluated using the specimen thickness employed in the end product or nominal 1/8 inch (3.2 mm) thickness, whichever is greater.

Exception No. 1: A polymeric material used for electrical insulation or enclosure of live parts is not required to comply with the HWI requirements if it complies with the Glow Wire Test, Section 36.

Exception No. 2: A polymeric material used for electrical insulation or enclosure of live parts is not required to comply with the HAI requirements if it complies with the High-Current Arc Resistance to Ignition Test, Section 37.

Exception No. 3: A polymeric material used in an enclosure of an attachment plug or cord connector which does not enclose live parts, or which encloses insulated live parts where the insulation thickness is greater than 0.028 inches (0.71 mm), is not required to comply with the HWI requirements.

Exception No. 4: A polymeric material used in an enclosure that is separated through air by more than 1/32 inches (0.8 mm) from uninsulated live parts and more than 1/2 inch (12.7 mm) from arcing parts is not required to comply with the HWI and HAI requirements.

Documents
Document Sharing Hub
Full document details: UL 498F 2021

Table 8.1
Hot Wire Ignition (HWI) and High-Current Arc Resistance to Ignition (HAI) Ratings of Insulating Materials

Flammability classification[a]	HWI[b,d]		HAI[c,d]	
	Mean ignition time (sec)	PLC	Mean no. of arcs	PLC
V-0, VTM-0	7 and up to 15	4	15 and up to 30	3
V-1, VTM-1[e]	15 and up to 30	3	15 and up to 30	3
V-2, VTM-2	15 and up to 30	3	15 and up to 30	3
HB	30 or more	2	60 or more	1

[a] Flammability classification – Described in UL 94.

[b] Hot Wire Resistance to Ignition – Described in UL 746A.

[c] High-Current Arc Resistance to Ignition – Described in UL 746A.

[d] Mean ignition time and mean no. of arcs to be used to evaluate Filament Wound Tubing, Industrial Laminates, Vulcanized Fiber, and similar polymeric materials only. All other materials are to be judged using the performance level class values.

[e] A polymeric material subjected to the flammability test with either the 3/4-inch (12 mm or 20 mm) flame in accordance with Exception No. 2 to 8.2.1 shall comply with the PLC for a V-1 rating.

8.4 Thermal properties

8.4.1 A polymeric material used for electrical insulation or enclosure of live parts shall have the relative thermal index ratings shown in Table 8.2 for the specific application of the insulating material. For materials with other than VTM flammability classifications, the material shall be evaluated using the specimen thickness employed in the end product or nominal 1/8 inch (3.2 mm) thickness, whichever is greater.

Exception: The following generic materials having readings of 65 or less on the Shore Durometer D scale (when measured for 5 seconds at an ambient temperature of 73.4 ±3.6°F (23.0 ±2.0°C) are acceptable for use at 140°F (60°C) based on their successful completion of the appropriate accelerated aging test described in Accelerated Aging Tests, Section 41:

a) Ethylene/Propylene/Diene (EPDM)

b) Natural Rubber (NR)

c) Neoprene (Chloroprene Butadiene) Rubber (CBR)

d) Nitrile Rubber (NBR)

e) Polyvinyl Chloride (PVC) and its copolymers

f) Silicone Rubber (SIR)

g) Styrene (Butadiene) Rubber (SBR)

h) Thermo Elastomeric [TEE; includes Thermoplastic Elastomers (TPE) and Ethylene Propylene Thermoplastic Rubber (EPTR)]

Documents
Document Sharing Hub
Full document details: UL 498F 2021

Table 8.2
Minimum Relative Thermal Indices of Insulating Materials Used in Insulation and Enclosure Applications

Application	Minimum relative thermal index[a], Degrees C		
	Electrical	Mechanical with impact[b]	Mechanical without impact
Permanently-wired devices (including appliance, fixture and equipment outlets, inlets, and receptacles	80[c]	60[c]	80[c]
Cord-connected devices (including attachment plugs, and cord connectors)	60[c]	60[c]	60[c]

[a] Relative Thermal Index – Described in UL 746B.

[b] For industrial laminates, vulcanized fiber, and similar polymeric materials, the material's minimum RTI for Mechanical shall be evaluated using the values specified for Mechanical Without Impact.

[c] For devices containing fuses, the minimum thermal indices shall be the values shown above or the temperature measured on the insulating material during the Fuseholder Temperature Test, whichever is greater. See Sections 50, 53, 62 and 71.

8.5 Vulcanized fiber

8.5.1 Vulcanized fiber is not prohibited from being used for insulating washers, separators, and barriers, but shall not be used as the sole support of live parts.

8.5.2 Vulcanized fiber shall comply with the requirements in 8.2.1 – 8.4.1 and shall be moisture-resistant in accordance with 39.1 and 39.2.

8.6 Sealing compounds

8.6.1 A sealing compound shall be insulating, waterproof, and shall not soften at a temperature of 65°C (149°F). The softening point is to be determined using ASTM E28.

8.6.2 Sulphur shall not be employed as a sealing compound.

8.7 Fuse enclosures

8.7.1 A fuse enclosure shall be of a moisture-resistant material in accordance with 39.1 and 39.2. Fiber and similar absorptive materials shall not be used for the enclosure of a fuse.

8.7.2 A polymeric material classified as Type V-0, V-1, or V-2 is considered as having flammability properties acceptable for use as the enclosure of a fuse.

9 Enclosure

9.1 General

9.1.1 A device shall have live parts protected against exposure to contact by persons when fully assembled using all essential parts (described in 9.1.5) and installed in the intended manner.

Exception No. 1: Male blades which are energized only when mated with the corresponding outlet are not required to comply with this requirement.

Exception No. 2: Exposed wiring terminals or other live parts enclosed within equipment or within an outlet box when the device is installed in the intended manner are not required to comply with this requirement.

AVA Documents
Document Sharing Hub
Full document details: UL 498F 2021

9.1.2 Accessible dead-metal parts of a grounding device shall be conductively connected to the grounding-conductor path through the device.

Exception: Accessible dead-metal parts electrically insulated from current-carrying parts are not required to comply with this requirement.

9.1.3 Accessible dead-metal parts of a non-grounding device shall be electrically insulated from live parts and wiring other than the complete flexible cord so that they are unable to be energized by stray strands, failure of wiring terminals (such as loosening of screws), or damaged or broken wiring. When the stray strand length affects whether a device complies with this requirement, the device shall be marked in accordance with Reference No. 3 to Table 89.1. See 9.1.7.

9.1.4 In order to judge the accessibility of a live or dead-metal part, the device is to be wired and assembled in accordance with the manufacturer's instructions, except that any nonessential parts (described in 9.1.6) that are able to be opened or removed by the user without using a tool are to be opened or removed. The probe shown in Figure 9.1 is to be applied with a force of not more than 3 lbf (13.3 N) to any depth that recessing will permit. The probe is to be rotated, changed in configuration, or angled before, during, and after application to any position that is necessary to examine the device. A live or dead-metal part is determined to be accessible when:

a) The part is contacted by the probe, or

b) The part is located in a hole larger than 9/32 inch (7.1 mm) in diameter and recessed less than 3/16 inch (4.8 mm).

Documents
Document Sharing Hub

Full document details: UL 498F 2021

Figure 9.1

Articulate Probe with Web Stop

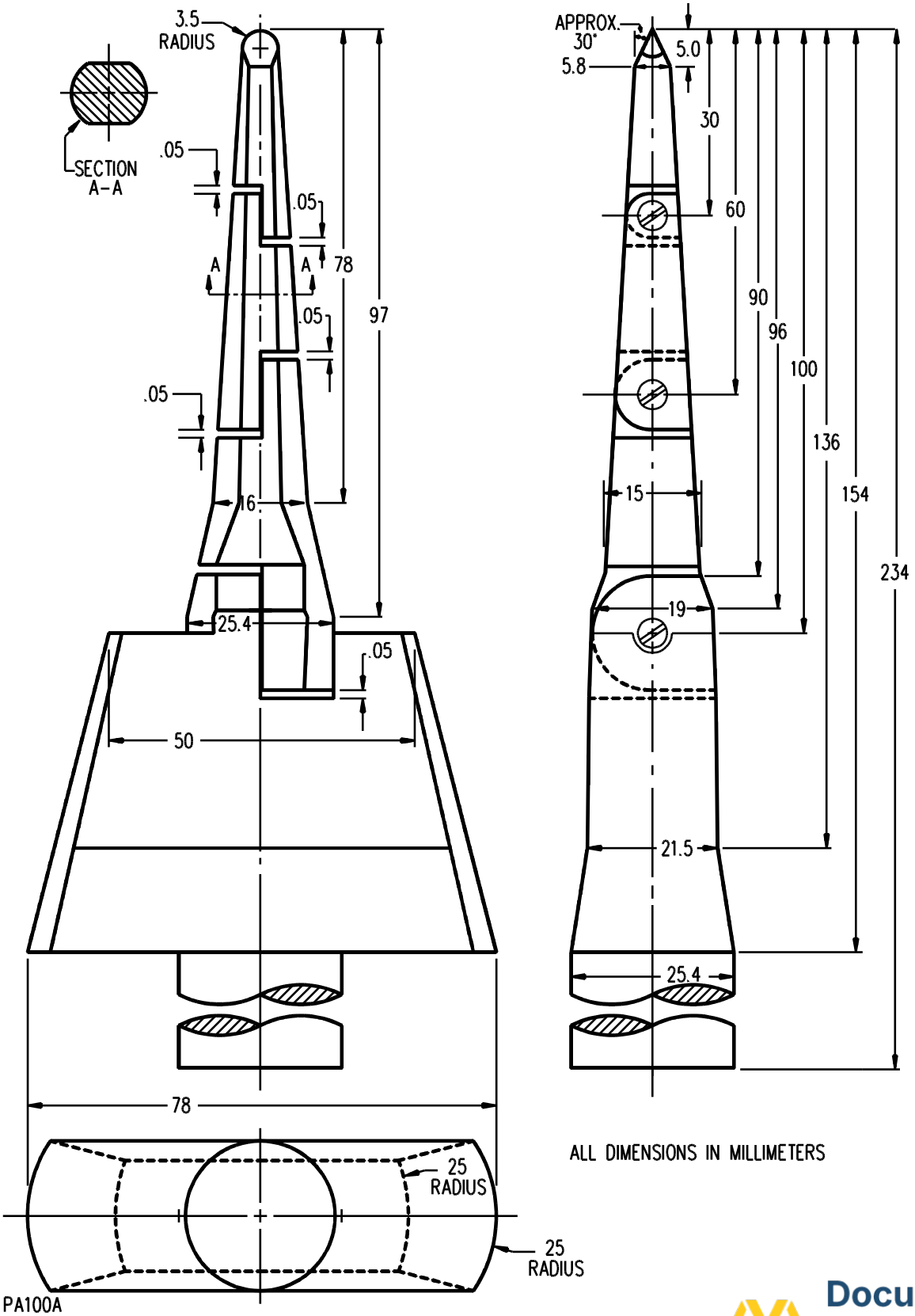

Documents
Document Sharing Hub
Full document details: UL 498F 2021

9.1.5 A separable part is considered essential for the operation of the device if it employs a latch or detent or requires use of a tool to remove, and if it performs any of the following functions:

a) Encloses or completes the enclosure of current-carrying parts other than those on the male face of an attachment plug;

b) Encloses or completes the enclosure of the flexible cord from which the jacket has been removed for wiring;

c) Provides for the placement and removal of a fuse.

9.1.6 A separable part (such as an insulating face cover, disc or strain relief clamp) is not considered essential for the operation of the device if it can be removed without the use of a tool or without defeating a latch or detent and if it performs any of the following functions:

a) Provides strain relief;

b) Encloses wiring terminals that would otherwise be exposed on the male face of an attachment plug or current tap; or

c) Provides access to a fuse through the male face of an attachment plug.

9.1.7 With respect to 9.1.5(b), the enclosure of a flexible cord is not considered to be complete where two insulated conductors of a parallel-type cord are split apart or where the jacket is removed from the insulated conductors of a jacketed-type cord.

9.2 Male faces and wire terminations

9.2.1 The wire terminations of a 20 A attachment plug shall be completely enclosed when the device is wired on flexible cord and assembled as intended, using only those parts essential for the operation of the device (dead-front construction). See 9.1.5 and 9.1.6.

9.2.2 An exposed live part on the face of an attachment plug rated other than 20 A shall be provided with an insulating disc or face cover that is at least 0.028 inch (0.71 mm) thick and completely covers all exposed live parts. Any unfilled openings on a face cover or disc provided with multiple clearance openings to enable its use with a number of blade arrangements are to be located opposite the anticipated insulating face of the corresponding outlet device.

9.2.3 An insulating disc or face cover intended to be opened or removed to provide access to the wiring terminals shall be mechanically secured after wiring by one or more screws, latches, or detents that cannot be unintentionally opened or removed. A cover that is held in place by only friction without any positive detent action is not considered mechanically secured and is to be subjected to the Secureness-Of-Cover Test described in Section 47.

9.2.4 An insulating disc or face cover shall enclose the wiring terminal compartments with a fit at the periphery that will not permit the entrance of a 0.030 inch diameter (0.76 mm) probe.

Exception: A notch may be provided in the cover to facilitate removal but only in areas remote from wiring terminals so that unclamped live strands cannot reach the opening. The notch is to comply with all of the following:

a) It shall not be deeper than 1/8 inch (3.2 mm) from the periphery;

b) It shall not be wider than 3/8 inch (9.5 mm) along the periphery of the cover; and

Documents
Document Sharing Hub
Full document details: UL 498F 2021

c) It shall not be located within 3/8 inch (9.5 mm) of the binding screw head as measured from the closest point in the notch periphery.

9.2.5 A device with a separable face cover shall be capable of being properly wired with the maximum size of the heaviest-duty type of flexible cord intended without inhibiting the full seating of the cover. The flexible cord used to determine compliance shall:

a) Have an ampacity at least equal to the rating of the device configuration;

b) Be of the type and size marked on the device; or

c) Be of the maximum size that can be accommodated by the cord-entrance opening into the device.

9.2.6 An attachment plug with a separable face cover or disc shall be shipped with the cover attached to the device but not necessarily mechanically secured.

10 Current-Carrying Parts

10.1 General

10.1.1 Iron or steel, plated or unplated, shall not be used for parts that are depended upon to carry current.

Exception No. 1: Stainless steel may be employed for a part not subject to arcing.

Exception No. 2: A steel that is corrosion-resistant (stainless) or is protected against corrosion by cadmium plating, zinc plating, or an equivalent protective coating, may be used for wire-binding nuts and screws if these parts are not depended upon to carry current.

10.1.2 A current-carrying part shall be restricted from turning relative to the surface on which it is mounted if such turning would adversely affect the performance of the device.

10.1.3 Uninsulated live parts shall be secured in place so that a reduction in the spacings below those required in 14.1 is not likely.

10.2 Contacts

10.2.1 Female contacts and associated live parts in the contact opening of an outlet device that can be touched by the probe illustrated in Figure 10.1 shall be recessed from the plane of the opening a distance not less than 1/4 of the maximum straight-line dimension of the opening, or 3/64 inch (1.2 mm), whichever is larger. That plane nearest the face of the device having the minimum opening for the pin or blade clearance is to be used to determine the minimum recess. Bevels, tapers, or other expansions of the opening to the face of the device do not affect the measurement. The probe in Figure 10.1 is to be inserted point first as far as possible in the opening without distorting the perimeter of the opening. The maximum straight-line dimension is the maximum-length straight-line that will fit within the opening at the plane of measurement.

Exception No. 1: Devices having openings that close upon removal of the attachment plug are not required to comply with this requirement.

Exception No. 2: Specific-purpose devices intended only for disconnecting use (see 88.5), are not required to comply with this requirement.

AVA Documents
Document Sharing Hub

Full document details: UL 498F 2021

Figure 10.1

Probe

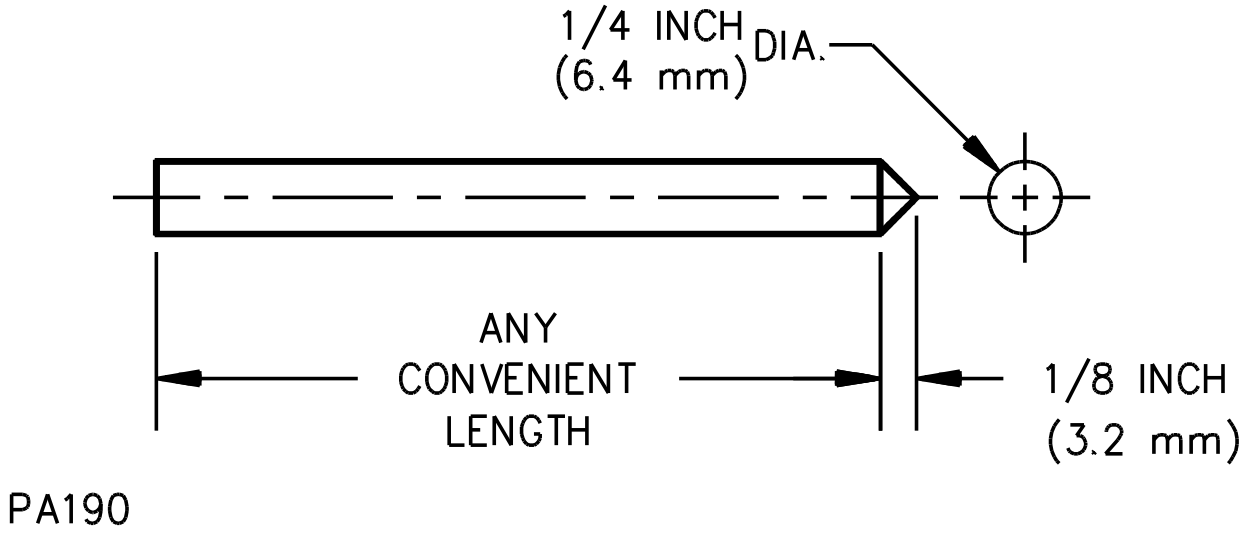

11 Grounding and Dead Metal Parts

11.1 The following grounding parts shall be of copper or of a copper-base alloy:

a) The grounding pin, blade, or contact,

b) The grounding-conductor path through an attachment plug or cord connector, except for a metal housing or armor, and

c) The grounding-conductor path through a receptacle up to the strap, yoke, or other mounting means.

Exception: A rivet, bolt, or clamp that is used to secure parts in the grounding-conductor path, but which is not an essential conductor in the grounding-conductor path, may be of steel or its equivalent.

11.2 A copper-base-alloy rivet that is used to secure parts in the grounding-conductor path, or that forms a part of the grounding-conductor path, shall not contain less than 80 percent copper.

11.3 The grounding-conductor path connections in a grounding device shall be secured by riveting, bolting, welding, or equivalent means.

Exception: Another form of connection employed in a cord connector is not prohibited when the connection complies with the requirement in Potential Drop in Grounding Connections Test, Section 63.

11.4 The grounding pin, blade, or contact, of a grounding device shall be permanently attached to the body of the device.

AVA Documents
Document Sharing Hub
Full document details: UL 498F 2021

Exception: A device in which the grounding member is mounted in soft rubber or similarly flexible material is not precluded by this requirement. The requirement contemplates that the element is to be secured in a manner so that it is not readily removable or movable.

11.5 Grounding and other dead metal parts shall be secured in place so that a reduction in spacings below those required in 14.1 is not likely.

11.6 The grounding terminal of a grounding device shall be connected to the contact that is intended for use for equipment grounding. For devices having one of the standard grounding configurations, the grounding contact is identified by the letter "G" in the corresponding figure in ANSI/NEMA WD6, and in UL 1681. The grounding terminal shall be permanently identified in accordance with 91.1.1 in a manner that is readily recognizable during installation. See also 18.1, 22.1, 26.1.2, and Section 91, Identification and Marking of Terminals.

11.7 Dead-metal parts of a grounding device shall be conductively connected to the grounding-conductor path through the device. See 9.1.2.

Exception: Dead-metal parts isolated from current-carrying parts and wiring other than complete flexible cords (see 9.1.7) are not required to comply with this requirement.

11.8 A conductive connection between a blade, pin, or contact, and an exposed dead-metal part capable of being grounded in service, such as the mounting strap, yoke, or body armor, shall be provided only in a grounding device. A non-grounding device with exposed dead-metal parts shall not be provided with a wiring terminal identified for an equipment grounding conductor. See also 18.3 and 22.2.

Exception: A nonstandard-configuration device that does not employ a dedicated grounding blade, pin, or contact, but which uses body armor or similar exposed metal parts as an equipment grounding conductor is not prohibited from being provided with an equipment grounding terminal only when the conductive connection between the grounding terminal and the exposed metal parts is obvious to the installer.

11.9 Dead metal parts of a device for use in non-grounding applications shall be insulated from live parts and wiring other than the complete flexible cord so that stray strands, failure of wiring terminals, or failure of wiring shall not energize accessible dead metal parts. See 9.1.3.

11.10 Iron or steel other than machine screws, washers, nuts, and stainless steel parts shall be protected against corrosion.

Exception: Parts determined to comply with 28.2.4 are not required to comply with this requirement.

12 Terminals

12.1 General

12.1.1 When a device is intended for the connection of conductors, a means shall be provided for connection such as a wire-binding screw or pressure-wire type wiring terminal, or a lead that is factory-assembled by means of soldering, welding, riveting or crimping. A wire-binding screw terminal shall not be used for the connection of circuit wires to a device rated more than 30 A and intended for connection to conductors greater than 10 AWG (5.3 mm^2).

12.1.2 A terminal provided for the field connection of a grounding conductor shall employ a mechanical clamping means that does not depend upon solder for the connection of the wire.

Documents
Document Sharing Hub
Full document details: UL 498F 2021

12.2 Wire-binding screw terminals

12.2.1 A wiring terminal that involves a wire-binding screw shall have upturned lugs, or the equivalent, to hold a wire under the head of the screw.

12.2.2 A terminal plate that has a tapped hole for a wire-binding screw shall be of 0.030 inch (0.76 mm) or thicker metal and shall not have fewer than two full threads in the metal. A binding screw that has 32 or more threads per inch (per 25.4 mm) with a terminal plate formed from stock 0.030 inch (0.76 mm) thick, may have the metal extruded at the tapped hole to provide two full threads for the binding screw.

12.2.3 A wire-binding screw shall thread into metal.

12.2.4 The minimum size and maximum number of threads per inch (per 25.4 mm) for a wire-binding screw shall be as indicated in Table 12.1.

Table 12.1
Sizes of Terminal Screws

Rating of device in amperes	Minimum size of screw	Maximum number of threads per inch (per 25.4 mm)
20	8[a]	32[b]
30	8	32

[a] No. 6-36 screws with a 0.296 inch diameter (7.52 mm) or larger head may be used for terminals on attachment plugs and cord connectors. On the device with a 5-20 configuration, the terminal screw that is used for connecting the grounding conductor to the outlet box shall not be smaller than No. 6-36.

[b] No. 8 or larger screws having more than the number of threads per inch (per 25.4 mm) indicated may be used for terminals when the assembly complies with the Tightening Torque Test, Section 44.

12.2.5 A receptacle or inlet rated 30 A or less and employing wire-binding screw terminals for connection to copper branch circuit conductors only, shall comply with the general performance requirements for receptacles, Section 67 or the general performance requirements for inlets, Section 51 as applicable.

12.2.6 The tightening torque for the wire-binding screw terminals shall be specified by the device manufacturer and shall be marked as described in Reference No. 4 of Table 89.2 for inlets and Reference No. 18 of Table 89.4 for receptacles.

12.3 Soldering lugs

12.3.1 A terminal plate for a soldering lug shall be at least 0.050 inch (1.27 mm) thick and shall not have fewer than two full threads in the metal for a terminal screw.

12.4 Pressure-wire terminals

12.4.1 A terminal plate for a pressure-wire terminal shall be at least 0.030 inch (0.76 mm) thick and shall not have fewer than two full threads in the metal for a terminal screw.

12.4.2 A pressure-wire terminal intended for the connection of branch circuit conductors to an inlet or receptacle shall be investigated in accordance with Table 12.2.

Documents
Document Sharing Hub
Full document details: UL 498F 2021

Table 12.2
Pressure-wire Terminals Used in Receptacles and Inlets

Use	Current rating	Pressure-wire terminal type	Reference paragraphs
Copper wire only	<30A	Clamp	54.4, 72.5
		Setscrew	12.4.3, 54.1, 72.2

12.4.3 The tightening torque for the pressure-wire terminals designated in Table 12.2 shall be specified by the device manufacturer and shall be marked as described in Reference No. 4 of Table 89.2 for inlets and Reference No. 18 of Table 89.4 for receptacles. The specified tightening torque shall not be less than 90 percent of the value employed in the static heating test in UL 486E, for the maximum wire size corresponding to the ampere rating of the device.

Exception: A lesser torque value is not prohibited when the connector is investigated in accordance with UL 486A-486B or UL 486E using the lesser assigned torque value.

12.5 Combination wire binding/pressure-wire terminals

12.5.1 A receptacle or inlet employing a combination wire binding/pressure-type terminal shall be limited to 10, or 12 AWG conductors. The terminals shall comply with the applicable performance requirements as specified in UL 486E.

12.5.2 A receptacle or inlet employing a combination wire binding/pressure-wire terminal for connection to copper branch circuit conductors only, shall comply with the general performance requirements for receptacles, as specified in Section 67, Combination Wire Binding/Pressure Wire-Type Terminals, or the general performance requirements for inlets, Section 51 as applicable.

12.6 Spring action clamp terminals

12.6.1 In addition to the requirements contained in this standard, a device employing a spring action clamp terminal shall also comply with the applicable requirements, as specified in UL 486E. All tests shall be investigated with minimum and maximum conductor AWG size and for each type of conductor (solid and stranded), for each device construction.

12.6.2 A receptacle or inlet employing spring action clamp terminals are intended for either stranded or solid or both, copper wire only.

12.6.3 A receptacle or inlet employing spring action clamp terminals are intended for the connection of a single conductor only.

12.6.4 An attachment plug or cord connector employing spring action clamp terminals are intended for the connection to flexible cord only.

13 Cord Entry and Strain Relief

13.1 A device intended for connection to flexible cord shall be provided with a means of strain relief so that a pull on the flexible cord will not be transmitted directly to the wiring terminations. Acceptability of the strain relief means shall be determined by the test described in Integrity of Assembly Test, Sections 48 or 64.

Exception: The strain relief provided on a device intended solely for factory assembly to the conductors of a flexible cord shall be subjected to the Integrity of Assembly Test, Section 46, but is not required to restrict

AVA Documents
Document Sharing Hub
Full document details: UL 498F 2021

a pull on the flexible cord from being transmitted directly to the wiring terminations when the conductors are terminated as described in 13.2(a).

13.2 A device intended solely for factory assembly to the conductors of a flexible cord is to be connected to the conductors by:

a) Welding, riveting, crimping, or the equivalent, or

b) Soldering, when an offset or one or more right-angle bends in the conductor are employed so that a pull on the conductor will not be transmitted directly to the connection.

13.3 The diameter of a round cord-entry hole shall not be longer than 1/4 inch (6.4 mm).

13.4 A metal-covered device intended for connection to a flexible cord shall be provided with an insulating bushing of porcelain, phenolic or cold-molded composition, or other insulating material with equivalent properties.

Exception No. 1: Hard fiber is acceptable for the bushing if the fiber is not less than 3/64 inch (1.2 mm) thick, and it is so formed and secured in place that it will not be affected by ordinary conditions of moisture.

Exception No. 2: If the metal covering (armor) of a device is not in proximity to the cord-entry hole, and the insulating material of which the plug is made serves as a smooth, well-rounded bushing for a flexible cord, a separate insulating bushing is not required.

Exception No. 3: A metal-covered device with a metal cord grip intended specifically for use with a jacketed type of flexible cord, such as Type S or SJ is not required to have an insulating bushing.

14 Spacings

14.1 The spacings maintained through air or over surface shall be a minimum 3/64 inch (1.2 mm) for a device rated 250 V or less, and a minimum 1/8 inch (3.2 mm) for a device rated more than 250 V, between the following:

a) Uninsulated live parts of opposite polarity;

b) An uninsulated live part and a dead-metal part that is likely to be grounded or exposed to contact by persons when the device is installed as intended, including a metal surface on which the device is mounted in the intended manner or a metal face plate used with a flush receptacle.

Exception No. 1: The grounding terminal of a flush receptacle shall instead comply with the spacing requirements in 28.2.1.

Exception No. 2: A dead-metal screw head, rivet, or the like, which is located in a hole not larger than 9/32 inch (7.1 mm) in diameter and recessed not less than 3/16 inch (4.8 mm) is not considered to be exposed to contact by persons after the device is installed in the intended manner.

14.2 In measuring a spacing, an isolated dead-metal part interposed between live parts of opposite polarity, or between a live part and a grounded or exposed dead-metal part, is considered to reduce the spacing by an amount equal to the dimension of the isolated dead-metal part in the direction of the measurement.

Documents
Document Sharing Hub
Full document details: UL 498F 2021