UL 507

ISBN 0-7629-0488-7

Electric Fans

UL COPYRIGHTED MATERIAL –
NOT AUTHORIZED FOR FURTHER REPRODUCTION OR
DISTRIBUTION WITHOUT PERMISSION FROM UL

Documents
Document Sharing Hub

Full document details: UL 507 2006

UL COPYRIGHTED MATERIAL –
NOT AUTHORIZED FOR FURTHER REPRODUCTION OR
DISTRIBUTION WITHOUT PERMISSION FROM UL

Documents
Document Sharing Hub

Full document details: UL 507 2006

Underwriters Laboratories Inc. (UL)
333 Pfingsten Road
Northbrook, IL 60062-2096

UL Standard for Safety for Electric Fans, UL 507

Ninth Edition, Dated December 13, 1999

Revisions: This Standard contains revisions through and including January 10, 2006.

Summary of Topics

The revisions dated January 10, 2006 were issued to extend the current effective date of December 23, 2005 to December 23, 2007 for part (c) of paragraph 19.6.

UL Standards for Safety are developed and maintained in the Standard Generalized Markup Language (SGML). SGML -- an international standard (ISO 8879-1986) -- is a descriptive markup language that describes a document's structure and purpose, rather than its physical appearance on a page. Due to formatting differences resulting from the use of UL's new electronic publishing system, please note that additional pages (on which no requirements have been changed) may be included in revision pages due to relocation of existing text and reformatting of the Standard.

Text that has been changed in any manner is marked with a vertical line in the margin. Changes in requirements are marked with a vertical line in the margin and are followed by an effective date note indicating the date of publication or the date on which the changed requirement becomes effective.

A change in an effective date is indicated by a note following the affected item, and giving both the previous effective date and the new date the requirement becomes effective.

The following table lists the future effective dates with the corresponding reference.

Future Effective Dates	References
December 23, 2005	Paragraphs 6.3.1, 6.4.2, 7.1, 8.3.1, 8.3.3, 9.3.1, 9.3.2, 9.4.1, 9.4.3, 19.6(a), (b), (d) - (f), 23.0, 23.1, 23.3, 24.9, 46.2, 46.3, 61.4, 62.1.10, 62.5.3, 62.5.8, 62.5.9, 63.6, 130.8, 159.2, 159.3.1, Table 9.1 (rows one and two), and Figure 9.1
May 12, 2007	Paragraphs 1.1 – 1.8, 91.2.2, 2.2.5, 16.19.1, 22.1.1, 22.1.2, 38.1.1, 38.3.4, 63.7, 63.8, 64.5, 64.7, 68.1, 68.2, 86.9 – 86.14, 88.8, 88.9, 89.5, 91.2.2, 91.3.3.1, Sections 42A and 44A, and Table 9.1 (row three)
December 23, 2007	Part (c) of paragraph 19.6

The revisions dated July 6, 2005 include a reprinted title page (page1) for this Standard.

The revisions dated July 6, 2005 were issued to correct an effective date for Table 9.1, in which rows one and two are effective December 23, 2005 and row 3 is effective May 12, 2007 per bulletin dated June 17, 2005 sent to subscribers to Subject 507 and to Listees GPRT and GPWV. Also included in this revision is the effective date of June 23, 2005 extended to December 23, 2005 per bulletin dated June 22, 2005 sent to all Listees to Subject 507.

The revisions dated June 5, 2003 were issued to correct an effective date for Table 13.2. The effective date was changed from February 21, 2004 to February 21, 2005.

UL COPYRIGHTED MATERIAL –
NOT AUTHORIZED FOR FURTHER REPRODUCTION OR
DISTRIBUTION WITHOUT PERMISSION FROM UL
Documents
Document Sharing Hub
Full document details: UL 507 2006

As indicated on the title page (page1), this UL Standard for Safety has been adopted by the Department of Defense.

As indicated on the title page (page 1), this UL Standard for Safety is an American National Standard. Attention is directed to the note on the title page of this Standard outlining the procedures to be followed to retain the approved text of this ANSI/UL Standard.

The UL Foreword is no longer located within the UL Standard. For information concerning the use and application of the requirements contained in this Standard, the current version of the UL Foreword is located on ULStandardsInfoNet at: http://ulstandardsinfonet.ul.com/ulforeword.html

The master for this Standard at UL's Northbrook Office is the official document insofar as it relates to a UL service and the compliance of a product with respect to the requirements for that product and service, or if there are questions regarding the accuracy of this Standard.

UL's Standards for Safety are copyrighted by UL. Neither a printed copy of a Standard, nor the distribution diskette for a Standard-on-Diskette and the file for the Standard on the distribution diskette should be altered in any way. All of UL's Standards and all copyrights, ownerships, and rights regarding those Standards shall remain the sole and exclusive property of UL.

All rights reserved. No part of this publication may be reproduced, stored in a retrieval system, or transmitted in any form by any means, electronic, mechanical photocopying, recording, or otherwise without prior permission of UL.

Revisions of UL Standards for Safety are issued from time to time. A UL Standard for Safety is current only if it incorporates the most recently adopted revisions.

UL provides this Standard ″as is″ without warranty of any kind, either expressed or implied, including but not limited to, the implied warranties of merchantability or fitness for any purpose.

In no event will UL be liable for any special, incidental, consequential, indirect or similar damages, including loss of profits, lost savings, loss of data, or any other damages arising out of the use of or the inability to use this Standard, even if UL or an authorized UL representative has been advised of the possibility of such damage. In no event shall UL's liability for any damage ever exceed the price paid for this Standard, regardless of the form of the claim.

UL will attempt to answer support requests concerning electronic versions of its Standards. However, this support service is offered on a reasonable efforts basis only, and UL may not be able to resolve every support request. UL supports the electronic versions of its Standards only if they are used under the conditions and operating systems for which it is intended. UL's support policies may change from time-to-time without notification.

UL reserves the right to change the format, presentation, file types and formats, delivery methods and formats, and the like of both its printed and electronic Standards without prior notice.

Purchasers of the electronic versions of UL's Standards for Safety agree to defend, indemnify, and hold UL harmless from and against any loss, expense, liability, damage, claim, or judgement (including reasonable attorney's fees) resulting from any error or deviation introduced while purchaser is storing an electronic Standard on the purchaser's computer system.

UL COPYRIGHTED MATERIAL –
NOT AUTHORIZED FOR FURTHER REPRODUCTION OR
DISTRIBUTION WITHOUT PERMISSION FROM UL

Documents
Document Sharing Hub

Full document details: UL 507 2006

If a single-user version electronic Standard was purchased, one copy of this Standard may be stored on the hard disk of a single personal computer, or on a single LAN file-server or the permanent storage device of a multiple-user computer in such a manner that this Standard may only be accessed by one user at a time and for which there is no possibility of multiple concurrent access.

If a multiple-user version electronic Standard was purchased, one copy of the Standard may be stored on a single LAN file-server, or on the permanent storage device of a multiple-user computer, or on an Intranet server. The number of concurrent users shall not exceed the number of users authorized.

Electronic Standards are intended for on-line use, such as for viewing the requirements of a Standard, conducting a word search, and the like. Only one copy of the Standard may be printed from each single-user version of an electronic Standard. Only one copy of the Standard may be printed for each authorized user of a multiple-user version of an electronic Standard. Because of differences in the computer/software/printer setup used by UL and those of electronic Standards purchasers, the printed copy obtained by a purchaser may not look exactly like the on-line screen view or the printed Standard.

An employee of an organization purchasing a UL Standard can make a copy of the page or pages being viewed for their own fair and/or practical internal use.

The requirements in this Standard are now in effect, except for those paragraphs, sections, tables, figures, and/or other elements of the Standard having future effective dates as indicated in the note following the affected item. The prior text for requirements that have been revised and that have a future effective date are located after the Standard, and are preceded by a ″SUPERSEDED REQUIREMENTS″ notice.

New product submittals made prior to a specified future effective date will be judged under all of the requirements in this Standard including those requirements with a specified future effective date, unless the applicant specifically requests that the product be judged under the current requirements. However, if the applicant elects this option, it should be noted that compliance with all the requirements in this Standard will be required as a condition of continued Listing, Recognition, and Follow-Up Services after the effective date, and understanding of this should be signified in writing.

Copyright © 2006 Underwriters Laboratories Inc.

UL COPYRIGHTED MATERIAL –
NOT AUTHORIZED FOR FURTHER REPRODUCTION OR
DISTRIBUTION WITHOUT PERMISSION FROM UL

Documents
Document Sharing Hub

Full document details: UL 507 2006

This Standard consists of pages dated as shown in the following checklist:

Page	Date
1	July 6, 2005
2	May 12, 2005
3	January 10, 2006
4-5	May 12, 2005
6	February 21, 2003
7-8A	May 12, 2005
8B	December 23, 2003
8C	May 12, 2005
8D-10	December 23, 2003
11	February 21, 2003
12-13	December 13, 1999
14-18D	May 12, 2005
19	February 21, 2003
20	December 13, 1999
21-22	May 12, 2005
23-24	February 21, 2003
25	May 12, 2005
26	July 6, 2005
26A-26B	May 12, 2005
27	December 23, 2003
28	December 13, 1999
29-30	December 23, 2003
30A-30B	February 21, 2003
31	December 23, 2003
32	July 6, 2005
32A-32B	May 12, 2005
33	December 13, 1999
34	May 12, 2005
35	December 13, 1999
36-38	December 23, 2003
38A	May 12, 2005
38B-38D	December 23, 2003
39	February 21, 2003
40-40B	May 12, 2005
41-44	February 21, 2003
45-46	September 24, 2001
46A-48	January 10, 2006
49-50B	May 12, 2005
51	January 10, 2006
52-54D	May 12, 2005
55	December 23, 2003
56-56B	May 12, 2005
57-58	December 23, 2003
59-60B	May 12, 2005
61	December 13, 1999
62-63	May 12, 2005
64	February 21, 2003
65	September 24, 2001
66-66B	February 21, 2003

UL COPYRIGHTED MATERIAL –
NOT AUTHORIZED FOR FURTHER REPRODUCTION OR
DISTRIBUTION WITHOUT PERMISSION FROM UL
Documents
Document Sharing Hub
Full document details: UL 507 2006

67-70 . . . . . December 13, 1999
71 . . . . . February 21, 2003
72-74B . . . . . December 23, 2003
75-76B . . . . . February 21, 2003
77 . . . . . December 13, 1999
78 . . . . . February 21, 2003
78A-79 . . . . . May 12, 2005
80-80B . . . . . December 23, 2003
81 . . . . . December 13, 1999
82 . . . . . May 12, 2005
82A-82B . . . . . September 24, 2001
83 . . . . . December 13, 1999
84-85. . . . . May 12, 2005
86 . . . . . September 24, 2001
86A-88 . . . . . May 12, 2005
89 . . . . . February 21, 2003
90 . . . . . December 23, 2003
90A-90B. . . . . February 21, 2003
91 . . . . . December 13, 1999
92-92B . . . . . December 23, 2003
93-94 . . . . . February 21, 2003
95 . . . . . December 13, 1999
96-98A . . . . . December 23, 2003
98B . . . . . September 24, 2001
99 . . . . . December 13, 1999
100 . . . . . December 23, 2003
100A . . . . . July 6, 2005
100B. . . . . December 23, 2003
101 . . . . . February 21, 2003
102 . . . . . December 23, 2003
102A . . . . . May 12, 2005
102B . . . . . February 21, 2003
103 . . . . . December 13, 1999
104 . . . . . May 12, 2005
105 . . . . . February 21, 2003
106-108A . . . . . May 12, 2005
108B . . . . . September 24, 2001
109 . . . . . December 13, 1999
110-112B . . . . . February 21, 2003
113 . . . . . December 13, 1999
114-114A . . . . . February 21, 2003
114B . . . . . May 12, 2005
115 . . . . . February 21, 2003
116 . . . . . December 13, 1999
117-119 . . . . . February 21, 2003
120 . . . . . May 12, 2005
120A-120B . . . . . February 21, 2003
121-122B . . . . . September 24, 2001
123-128B . . . . . May 12, 2005
129-130 . . . . . September 24, 2001
130A . . . . . May 12, 2005
130B-130N . . . . . December 23, 2003
131-136 . . . . . December 13, 1999

UL COPYRIGHTED MATERIAL –
NOT AUTHORIZED FOR FURTHER REPRODUCTION OR
DISTRIBUTION WITHOUT PERMISSION FROM UL

Documents
Document Sharing Hub

Full document details: UL 507 2006

137 . . . . . February 21, 2003
138-139 . . . . . May 12, 2005
140-143 . . . . . February 21, 2003
144 . . . . . May 12, 2005
145-146 . . . . . December 13, 1999
147-148B . . . . . February 21, 2003
149 . . . . . December 13, 1999
150-151 . . . . . February 21, 2003
152 . . . . . December 13, 1999
153-154 . . . . . February 21, 2003
155-156B . . . . . May 12, 2005
157 . . . . . December 13, 1999
158 . . . . . February 21, 2003
159 . . . . . May 12, 2005
160-160A. . . . . December 23, 2003
160B . . . . . May 12, 2005
160C-160F . . . . . December 23, 2003
161 . . . . . September 24, 2001
162 . . . . . May 12, 2005
162A-162B. . . . . September 24, 2001
163-165 . . . . . February 21, 2003
166-168 . . . . . May 12, 2005
168A. . . . . February 21, 2003
168B . . . . . May 12, 2005
168C-168D . . . . . February 21, 2003
169-173 . . . . . December 13, 1999
174 . . . . . September 24, 2001
175 . . . . . December 13, 1999
176 . . . . . December 23, 2003
176A-178 . . . . . May 12, 2005
179-180F . . . . . February 21, 2003
181 . . . . . May 12, 2005
182-183 . . . . . September 24, 2001
184-186B. . . . . December 23, 2003
187 . . . . . May 12, 2005
188-188B. . . . . December 23, 2003
189 . . . . . May 12, 2005
190-191 . . . . . February 21, 2003
192-193 . . . . . May 12, 2005
194 . . . . . February 21, 2003
SA1-SA2 . . . . . February 21, 2003
SA3-SA5 . . . . . December 13, 1999
SA6-SA8B. . . . . December 23, 2003
SA9-SA20 . . . . . December 13, 1999
A1 . . . . . May 12, 2005
A2. . . . . December 13, 1999
CRG1. . . . . December 13, 1999
CRG2. . . . . December 23, 2003
CRG3 . . . . . February 21, 2003
CRG4. . . . . December 13, 1999
CRG5-CRG6. . . . . February 21, 2003
CRG6A . . . . . December 23, 2003
CRG6B. . . . . February 21, 2003

UL COPYRIGHTED MATERIAL –
NOT AUTHORIZED FOR FURTHER REPRODUCTION OR
DISTRIBUTION WITHOUT PERMISSION FROM UL
Documents
Document Sharing Hub
Full document details: UL 507 2006

CRG7-CRG8 . . . . . December 13, 1999
SR1-SR2B . . . . . May 12, 2005
SR3-SR5 . . . . . December 23, 2003
SR6-SR8 . . . . . May 12, 2005

UL COPYRIGHTED MATERIAL –
NOT AUTHORIZED FOR FURTHER REPRODUCTION OR
DISTRIBUTION WITHOUT PERMISSION FROM UL
Documents
Document Sharing Hub
Full document details: UL 507 2006

No Text on This Page

UL COPYRIGHTED MATERIAL –
NOT AUTHORIZED FOR FURTHER REPRODUCTION OR
DISTRIBUTION WITHOUT PERMISSION FROM UL

Documents
Document Sharing Hub

Full document details: UL 507 2006

DECEMBER 13, 1999
(Title Page Reprinted: July 6, 2005)

ANSI/UL 507-2005

UL 507

Standard for Electric Fans

First Edition – January, 1935
Second Edition – March, 1938
Third Edition – May, 1961
Fourth Edition – July, 1969
Fifth Edition – November, 1972
Sixth Edition – February, 1977
Seventh Edition – December, 1991
Eighth Edition – October, 1994

Ninth Edition

December 13, 1999

The most recent designation of ANSI/UL 507 as an American National Standard (ANSI) occurred on May 6, 2005.

This ANSI/UL Standard for Safety, which consists of the Ninth edition with revisions through July 6, 2005 is under continuous maintenance, whereby each revision is ANSI approved upon publication. Comments or proposals for revisions on any part of the Standard may be submitted to UL at any time. Proposals should be submitted via a Proposal Request in UL's On-Line Collaborative Standards Development System (CSDS) at http://csds.ul.com.

The Department of Defense (DoD) has adopted UL 507 on February 5, 1993 . The publication of revised pages or a new edition of this Standard will not invalidate the DoD adoption.

An effective date included as a note immediately following certain requirements is one established by Underwriters Laboratories Inc.

Revisions of this Standard will be made by issuing revised or additional pages bearing their date of issue. A UL Standard is current only if it incorporates the most recently adopted revisions, all of which are itemized on the transmittal notice that accompanies the latest set of revised requirements.

ISBN 0-7629-0488-7

COPYRIGHT © 1979, 2005 UNDERWRITERS LABORATORIES INC.

UL COPYRIGHTED MATERIAL –
NOT AUTHORIZED FOR FURTHER REPRODUCTION OR
DISTRIBUTION WITHOUT PERMISSION FROM UL

Documents
Document Sharing Hub

Full document details: UL 507 2006

No Text on This Page

UL COPYRIGHTED MATERIAL –
NOT AUTHORIZED FOR FURTHER REPRODUCTION OR
DISTRIBUTION WITHOUT PERMISSION FROM UL

Documents
Document Sharing Hub

Full document details: UL 507 2006

CONTENTS

PART 1 – ALL FANS

INTRODUCTION

1 Scope 15
2 Glossary 17
2.1 General 17
2.2 Product terms 17
2.3 Additional terms 18A
3 Components 18B
4 Units of Measurement 18C
5 Application of Requirements 18C

CONSTRUCTION

6 Frame and Enclosures 19
6.1 General 19
6.2 Wood enclosure parts 22
6.3 Non-metallic enclosures 22
6.4 Non-metallic parts other than enclosures 25
7 Flame Spread and Smoke Developed Requirements for Non-Metallic Enclosures and Other Parts of Permanently Connected Equipment 26A
8 Accessibility of Moving Parts 26A
8.1 General 26A
8.2 Portable fans and window fans 26B
8.3 Stationary fans and permanently connected fans 29
9 Accessibility of Live Parts 31
9.1 General 31
9.2 Directly- and indirectly-accessible motor 31
9.3 Application of probes 32
9.4 Removal of parts 32A
9.5 Disconnection Means 34
10 Mechanical Assembly 34
11 Mounting Means 35
11.1 General 35
11.2 Cord-connected wall-mounted appliances 35
12 Protection Against Corrosion 36
13 Power Supply Connections – Permanently-Connected Appliances 36
13.1 General 36
13.2 Knockouts and openings 38
13.3 Field-wiring compartments 38A
13.4 Wiring terminals and leads 38C
13.5 Identification 39
14 Power Supply Connections – Cord-Connected Appliances 40
14.1 Cords and plugs 40
14.2 Strain relief 45
14.3 Bushings 46
15 Live Parts 46A
16 Internal Wiring – Electrical Connections 46A

UL COPYRIGHTED MATERIAL –
NOT AUTHORIZED FOR FURTHER REPRODUCTION OR
DISTRIBUTION WITHOUT PERMISSION FROM UL
Documents
Document Sharing Hub
Full document details: UL 507 2006

17 Insulating Material 49
18 Receptacles 50
19 Motors 50B
20 Motor Protection 52
21 Protective Devices 52
22 Switches, Including Motor Controllers 53
23 Capacitors 54A
24 Spacings 54B
25 Secondary Circuits 57
25.1 General 57
25.2 Difference between the level of evaluation required within each type of secondary circuit 57
25.3 Class 2 circuit requirements 60
25.4 Limited voltage/current circuit requirements 60
25.5 Limited energy circuit requirements 61
25.6 Limiting impedance circuit requirements 61
26 Printed-Wiring Boards 62
27 Electronic Circuits 63
28 Grounding 63
28.1 General 63
28.2 Permanently connected appliances 65
28.3 Cord-connected appliances 65
28.4 Grounding for low-voltage power-limited circuits 66
28.5 Fans employing convenience receptacles 66A
29 Filters 66A
30 Accessories 66B

PERFORMANCE – ALL APPLIANCES

31 Test Voltages 67
32 Leakage Current Test 67
33 Continuity of Grounding Circuit Test 70
34 Starting Current Test 70
35 Input Test 71
36 Temperature Test 71
36.1 All fans 71
36.2 Fans for use over an eye-level range oven 76
36.3 Controllers 76A
37 Dielectric Voltage Withstand Test 77
38 Water Spray Test 78A
38.1 General 78A
38.2 Test preparation 80
38.3 Procedure 82
38.4 120 volt cord-connected appliances 82
38.5 Other than 120 volt cord connected appliances 83
38.6 All appliances 83
39 Hosedown Test 83
40 Locked Rotor Test 84
41 Humidity Conditioning Test 85
42 Strain Relief Test 86
42A Interconnecting Cords and Leads 86A
43 Unguarded Impeller Tests 86A
44 Push Back Relief Test 86B

UL COPYRIGHTED MATERIAL –
NOT AUTHORIZED FOR FURTHER REPRODUCTION OR
DISTRIBUTION WITHOUT PERMISSION FROM UL
Documents
Document Sharing Hub
Full document details: UL 507 2006

44A Oscillating Fan Test 86B
45 Tests of Switches and Controls 87
45.1 Overload 87
45.2 Reversing 88
46 Static Load Test For Mounting Means 88
47 Impact Test on Guards 89
48 Static Force Test on Guards 90
49 Impeller Test for Portable Fans 90
50 Impeller Ignition Test 90
51 Component Breakdown Test 90A

PERFORMANCE – PORTABLE APPLIANCES

52 Drop Test 92
53 Security of Handle Test 92A
54 Stability Test 93
55 Hassock Fan Load Test 93

PERFORMANCE – PERMANENTLY CONNECTED APPLIANCES

56 Installation Test 94
57 Tests for Fans for Unattended Areas 94

MANUFACTURING AND PRODUCTION TESTS

58 Dielectric Voltage Withstand Test 94
59 Grounding Continuity Test 96
60 Polarization Test 96

RATING

61 Details 96

MARKING

62 General Markings 97
62.1 General 97
62.2 Motors 98
62.3 Controllers 99
62.4 Shipping 99
62.5 Wall- or ceiling-insert fans 99
62.6 Attic-mounted and roof-mounted fans 101
62.7 Wiring 101
63 Cautionary Markings 102

INSTRUCTIONS

64 Important Safety Instructions 103
64A Installation Instructions 105

UL COPYRIGHTED MATERIAL –
NOT AUTHORIZED FOR FURTHER REPRODUCTION OR
DISTRIBUTION WITHOUT PERMISSION FROM UL
Documents
Document Sharing Hub
Full document details: UL 507 2006

PART 2 – SPECIFIC FAN TYPES

FANS FOR USE WITH SOLID STATE SPEED CONTROLS

65 General 107
66 Construction 107
67 Performance 108
67.1 Temperature test 108
67.2 Abnormal operation test 108A
68 Marking 108A

CEILING-SUSPENDED FANS

69 General 110
70 Construction 110
70.1 Mounting means 110
70.2 Fan blades 112
70.3 Power supply connections 112
70.4 Wiring 112A
70.5 Openings in canopy 113
71 Performance 113
71.1 Static load test 113
71.2 Fans with polymeric mounting means 114
71.2A Polymeric blades 114A
71.3 Fan blade brackets 114B
72 Marking 117
73 Installation Instructions 119

DAMP LOCATION CEILING-SUSPENDED FANS

74 General 120A
75 Construction – Protection Against Corrosion 120A
76 Construction – Electrical 121
76A Construction – Exposure to Sunlight (Ultraviolet Radiation) 121
77 Performance 121
77.1 Polymeric blades 121
77.2 Polymeric ball-joint hanger means 122
78 Marking 122
79 Installation Instructions 122

WET LOCATION CEILING-SUSPENDED FANS

80 General 122
81 Construction 122
81.1 Corrosion protection 122
81.2 Fan blades 122A
82 Performance 122A
83 Marking 122A
84 Installation Instructions 122A

UL COPYRIGHTED MATERIAL –
NOT AUTHORIZED FOR FURTHER REPRODUCTION OR
DISTRIBUTION WITHOUT PERMISSION FROM UL

Documents
Document Sharing Hub

Full document details: UL 507 2006

CEILING-SUSPENDED FAN LIGHT KITS

85 General 123
86 Construction 123
87 Performance 124
88 Marking 125
89 Installation Instructions 126

FANS FOR USE IN COOKING AREAS

90 General 127
91 Construction 127
91.1 Motor 127
91.2 Duct-connection fitting 127
91.3 Enclosures and guards 128
91.4 Receptacles 128A
91.5 Filters 128A
91.6 Cord-connected rangehoods 128A
91.7 Rangehood cord-connection kits 130A
91.8 Light assemblies 130B
92 Performance 130B
92.1 General 130B
92.1A Temperature test for rangehoods 130C
92.2 Grease conditioning 130D
92.3 Oven and humidity conditioning 130D
92.4 Grease and humidity conditioning 130E
92.5 Tests for cord-connected rangehoods 130E
92.6 Tests for rangehood cord-connection kits 130E
92A Rating for Cord-Connected Rangehoods 130E
93 Marking 130F
93A Installation Instructions for Rangehoods and Rangehood Cord-Connection Kits 130G
93B Safety Instructions 130H

DAMP LOCATION FANS FOR USE IN COOKING AREAS

94 General 130I
95 Marking 130J
96 Instructions 130J

RANGEHOOD/REMOTE BLOWERS FOR USE IN COOKING AREAS

96A General 130J
96B Construction 130J
96C Performance 130K
96D Marking 130K
96E Installation Instructions 130K

VENTILATING-HOOD-FAN SHELVES

97 General 130L
98 Construction 130L
99 Performance 130M
99.1 Ventilating-hood-fan shelf temperature test 130M

UL COPYRIGHTED MATERIAL –
NOT AUTHORIZED FOR FURTHER REPRODUCTION OR
DISTRIBUTION WITHOUT PERMISSION FROM UL
Documents
Document Sharing Hub
Full document details: UL 507 2006

99.2 Strength of mounting test 135
99.3 Tipover test 136
100 Ratings 136
101 Marking 136
102 Installation Instructions 137

RECREATIONAL VEHICLE FANS

103 General 138
104 Construction 138
104.1 Means of mounting 138
104.2 Diffusers and lenses 138A
104.3 Supply connections – 24 volts or less 138A
104.4 Wiring 138A
104.5 Electrical components 138A
105 Performance 139
105.1 Input test – 24 volts or less 139
105.2 Normal temperature test – 24 volts or less 139
105.3 Dielectric voltage-withstand test – 24 volts or less 139
105.4 Abnormal operation test – 24 volts or less 141
105.5 Rain test – 24 volts or less 141
105.6 Vibration test – 24 volts or less 141
106 Manufacturing and Production Tests 142
106.1 Dielectric voltage-withstand test – 24 volts or less 142
107 Marking 142

FANS FOR AGRICULTURAL BUILDINGS

108 General 142
109 Construction 143
110 Performance 143
111 Marking 143

CEILING INSERT FAN/LIGHT COMBINATIONS

112 General 143
113 Construction 144
114 Performance 145
114.1 Normal temperature test 145
114.2 Abnormal operation tests 146
115 Marking 148A
116 Operating and Installation Instructions 150

SWAG-MOUNTED CEILING-SUSPENDED FANS

117 General 150
118 Construction 150
119 Marking 150B
120 Installation Instructions 152
121 Swag Kits 152
122 Through-Cord In-Line Speed Controllers 152
122.1 General 152
122.2 Construction 153

UL COPYRIGHTED MATERIAL –
NOT AUTHORIZED FOR FURTHER REPRODUCTION OR
DISTRIBUTION WITHOUT PERMISSION FROM UL
Documents
Document Sharing Hub
Full document details: UL 507 2006

122.3 Performance 154
122.4 Marking 155

FANS FOR USE IN WINDOWS

123 General 155
124 Construction 155
125 Installation Instructions 156

TOILET-BOWL FANS

126 General 156
127 Performance 156
127.1 Water spray test 156
127.2 Overflow test 156
127.3 Creep test 157
127.4 Heat cycling test 157
127.5 Temperature cycling tests 158
127.6 Static load test 158

EVAPORATIVE COOLERS

128 General 158
129 Construction 158
129.1 Frame and enclosure 158
129.2 Motors and pumps 159
129.3 Filters 159
129.4 Backflow prevention 160
129.5 Wetting of live parts 160
130 Performance 160
130.1 Input test 160
130.2 Temperature test 160A
130.3 Moisture resistance test 160A
130.4 Stability test 160A
130.5 Ultraviolet light and water exposure 160B
130.6 Overflow test 160B
130.7 Spill test 160C
130.8 Static loading test 160C
130A Marking 160E

FLOOR INSERT FANS

131 General 160E
132 Construction 160E
132.1 Moving parts 160E
133 Performance 161
133.1 Water splash test 161
133.2 Crush test 161

UL COPYRIGHTED MATERIAL –
NOT AUTHORIZED FOR FURTHER REPRODUCTION OR
DISTRIBUTION WITHOUT PERMISSION FROM UL
Documents
Document Sharing Hub
Full document details: UL 507 2006

OUTDOOR USE EQUIPMENT

134 General 161
135 Construction 162
135.1 General 162
135.2 Protection against corrosion 162
135.3 Field-wiring connections 163
135.4 Internal wiring 163
135.5 Insulating material 164
135.6 Enclosures 164
135.7 Grounding and power supply connections 164A
136 Performance 164A
136.1 Sealing compound 164A
136.2 Gasket 164A
136.3 Exposure to sunlight (ultraviolet radiation) 164B
137 Marking 164B
138 Instructions 165

DAMP LOCATION COMPONENT FANS

138A General 165
138B Construction 165
138C Performance 166
138D Markings 166

WET LOCATION AND OUTDOOR-USE COMPONENT FANS

138E General 166
138F Construction 166
138G Performance 167
138G.1 Thermal cycling test 167
138H Markings 168

FANS FOR USE IN UNATTENDED AREAS

139 General 168
140 Performance 168A
140.1 Test preparation – fan motor failure mode analysis 168A
140.2 Test procedure – fan motor failure mode analysis 168A

FANS INTENDED FOR INSTALLATION OVER A BATHTUB OR SHOWER

141 General 168B
142 Performance 168B
142.1 Water spray test 168B
142.2 Thermal shock test 168C
143 Marking 171
144 Installation Instructions 171

UL COPYRIGHTED MATERIAL –
NOT AUTHORIZED FOR FURTHER REPRODUCTION OR
DISTRIBUTION WITHOUT PERMISSION FROM UL
Documents
Document Sharing Hub
Full document details: UL 507 2006

DOWN-DRAFT FANS

145 General 171
146 Construction 171
146.1 Power supply connections 171
146.2 Actuating members 171
146.3 Ducts 172
146.4 Accessibility of moving parts 172
147 Performance 172
147.1 Temperature test 172
147.2 Flare-up test 175
147.3 Temperature and grease build-up profile 175
148 Marking 176
149 Installation Instructions 176

LOW VOLTAGE COMPONENT FANS

150 General 176
151 Construction 176A
151.1 Flammability of non-metallic enclosures and other parts 176A
151.2 Internal wiring – electrical connections 176A
151.3 Insulating material 176A
152 Performance 176B
152.1 Test voltages 176B
152.2 Input test 176B
152.3 Temperature test 176B
152.4 Dielectric voltage withstand test 176B
152.5 Abnormal operation locked rotor test 176B
153 Rating 179
154 Marking 179

DRYER TYPE AND COMMERCIAL BLOWER INFLATOR TYPE FANS

155 General 179
156 Construction 180
156.1 Convenience receptacle 180
156.2 Power supply cord 180
156A Performance 180A
156A.1 General 180A
156A.2 Attachment Plug Test 180A
156B Markings 180B
156B.1 General 180B
156C Instructions 180C
156C.1 General 180C

EVAPORATIVE COOLERS AND AIR-FILTERING APPLIANCES FOR COMMERCIAL-INDUSTRIAL APPLICATIONS

157 General 180C
158 Construction 180D
158.1 Assembly and shipping 180D
158.2 Transformers 181
158.3 Motor overload protection 181

UL COPYRIGHTED MATERIAL –
NOT AUTHORIZED FOR FURTHER REPRODUCTION OR
DISTRIBUTION WITHOUT PERMISSION FROM UL
Documents
Document Sharing Hub
Full document details: UL 507 2006

158.4 Overcurrent protection 183
158.5 Internal wiring 183
159 Markings 184
160 Caution Markings 186

RETROFIT PUMPS FOR EVAPORATIVE COOLERS

161 General 186
162 Construction 186A
163 Rating 188
164 Marking 188
165 Installation Instructions 188

DIRECT PLUG-IN PRODUCTS

166 General 189
167 Construction 189
167.1 Power supply connections 189
168 Performance 192
169 Marking 192

AIR FILTERING APPLIANCES FOR USE IN ″OTHER SPACES USED FOR ENVIRONMENTAL AIR″

170 General 192
171 Construction 192
172 Markings 193

SUPPLEMENT SA - FOLLOW-UP INSPECTION INSTRUCTIONS FOR FANS

INTRODUCTION

SA1 Scope SA1
SA2 Glossary SA1

RESPONSIBILITIES OF THE MANUFACTURER

SA3 General SA3

REQUIREMENTS FOR FACTORY TESTS

SA4 General SA4
SA5 Production Line Dielectric Voltage Withstand Test SA4
SA6 Production Line Grounding Continuity Test SA4
SA7 Production Line Polarization Test SA4
SA8 Impact Test on Thermoplastic Enclosures SA5
SA9 Locked Rotor Test SA5
SA9.1 General SA5
SA9.2 Acceptance criteria SA6
SA9.3 Test equipment SA8
SA9.4 Test preparation SA8

UL COPYRIGHTED MATERIAL –
NOT AUTHORIZED FOR FURTHER REPRODUCTION OR
DISTRIBUTION WITHOUT PERMISSION FROM UL
Documents
Document Sharing Hub
Full document details: UL 507 2006

SA9.5 Test method SA9

RESPONSIBILITIES OF THE FIELD REPRESENTATIVE

SA10 General SA10

INSTRUCTIONS FOR INSPECTION OF THE PRODUCT

SA11 General Requirements SA11
SA12 Special Requirements SA11

UL COPYRIGHTED MATERIAL –
NOT AUTHORIZED FOR FURTHER REPRODUCTION OR
DISTRIBUTION WITHOUT PERMISSION FROM UL
Documents
Document Sharing Hub
Full document details: UL 507 2006

No Text on This Page

UL COPYRIGHTED MATERIAL –
NOT AUTHORIZED FOR FURTHER REPRODUCTION OR
DISTRIBUTION WITHOUT PERMISSION FROM UL

Documents
Document Sharing Hub

Full document details: UL 507 2006

INSTRUCTIONS FOR FOLLOW-UP TESTS AT CERTIFICATION ORGANIZATION

SA13 Instructions for Sample Pickup SA14
SA13.1 General SA14
SA13.2 Thermoplastic enclosures SA14
SA13.3 Thermoplastic parts SA14
SA13.4 Fans and motors SA15
SA13.5 Polymeric ball-joint hangers SA16
SA14 Thermoplastic Enclosure Tests SA17
SA14.1 General SA17
SA14.2 Qualitative infrared analysis SA17
SA14.3 Differential scanning calorimetry SA17
SA14.4 Thermogravimetry SA17
SA14.5 Flame test – 3/4 inch SA18
SA14.6 Flame test – 5 inch SA18
SA15 Thermoplastic Parts Test SA18
SA16 Locked Rotor Tests SA18
SA17 Polymeric Ball-Joint Hanger Tests SA19
SA17.1 General SA19
SA17.2 Temperature conditioning SA19
SA17.3 Static load test SA19
SA17.4 Qualitative infrared analysis SA19
SA17.5 Flame test – 5 inch SA19

APPENDIX A

Standards for Components A1

UL COPYRIGHTED MATERIAL –
NOT AUTHORIZED FOR FURTHER REPRODUCTION OR
DISTRIBUTION WITHOUT PERMISSION FROM UL
Documents
Document Sharing Hub
Full document details: UL 507 2006

CANADIAN REQUIREMENTS COMPARISON GUIDE CRG 507

UL AND CANADIAN STANDARDS FOR ELECTRIC FANS CRG1

UL COPYRIGHTED MATERIAL –
NOT AUTHORIZED FOR FURTHER REPRODUCTION OR
DISTRIBUTION WITHOUT PERMISSION FROM UL
Documents
Document Sharing Hub
Full document details: UL 507 2006

No Text on This Page

UL COPYRIGHTED MATERIAL –
NOT AUTHORIZED FOR FURTHER REPRODUCTION OR
DISTRIBUTION WITHOUT PERMISSION FROM UL

Documents
Document Sharing Hub

Full document details: UL 507 2006

This page intentionally left blank.

UL COPYRIGHTED MATERIAL –
NOT AUTHORIZED FOR FURTHER REPRODUCTION OR
DISTRIBUTION WITHOUT PERMISSION FROM UL
Documents
Document Sharing Hub
Full document details: UL 507 2006

PART 1 – ALL FANS

INTRODUCTION

1 Scope

1.1 These requirements cover:

a) Fans and blowers that circulate air, such as desk, ceiling-suspended, and hassock fans;

b) Fans and blowers that ventilate air, such as attic, whole-house window, through wall, and direct discharge fans;

c) Ducted fans and blowers that exhaust air to the outside of a building structure, such as in-line, wall insert and ceiling insert fans;

d) Dryer type fans used for drying carpets or floors;

e) Household and commercial blower inflator type fans except as noted in 1.8(k);

f) Evaporative coolers;

g) Evaporative cooler replacement pumps;

h) Air-filtering appliances;

i) Component fans;

j) Low voltage component fans;

k) Residential cooking area fans, such as rangehoods and downdrafts;

l) Hand dryers without heater; and

m) Recirculating and blending units except as noted in 1.8(h).

These products are rated 600 volts or less and are intended to be employed in accordance with the National Electrical Code, ANSI/NFPA 70.

Revised 1.1 effective May 12, 2007

1.2 Deleted effective May 12, 2007

1.3 Deleted effective May 12, 2007

1.4 Deleted effective May 12, 2007

UL COPYRIGHTED MATERIAL –
NOT AUTHORIZED FOR FURTHER REPRODUCTION OR
DISTRIBUTION WITHOUT PERMISSION FROM UL

Documents
Document Sharing Hub

Full document details: UL 507 2006

1.5 Deleted effective May 12, 2007

1.6 Deleted effective May 12, 2007

1.7 Deleted effective May 12, 2007

1.8 These requirements do not cover:

a) Air heaters incorporating fans, heating-ventilating units, or blowers comprising components of such equipment as furnaces, mechanical-refrigeration equipment, or air conditioners;

b) Fusible links, and the like, provided to disconnect a fan or close shutters in the event of fire;

c) Fans for use in cooking areas when the fan is intended for other than household use;

d) Fans intended to be used in hazardous locations as defined in the National Electrical Code, ANSI/NFPA 70;

e) Fans intended to be installed over solvents or chemically flammable liquids or vapors;

f) Fans located in chemically corrosive environments;

g) Humidifiers;

h) Fans intended to move heated or conditioned air;

i) Heated hand dryers;

j) Ionizers, products with ionization features, or electrostatic air cleaners;

k) Blower or inflators intended for use with inflatable bouncing toys or similar children's products.

l) Microwaves, ventilating or otherwise;

m) Ducted or non-ducted heat recovery ventilators;

n) Deodorizers and air fresheners.

Added 1.8 effective May 12, 2007

UL COPYRIGHTED MATERIAL –
NOT AUTHORIZED FOR FURTHER REPRODUCTION OR
DISTRIBUTION WITHOUT PERMISSION FROM UL

Documents
Document Sharing Hub

Full document details: UL 507 2006

2 Glossary

2.1 General

2.1.1 For the purpose of this standard the following definitions apply. The types of appliances are arranged in alphabetical order under the heading Product Terms. Other terms not related to the types of products are defined in alphabetical order under the heading Additional Terms. Also, see appropriate sections of the Standard for specific fan types not defined in this section.

2.2 Product terms

2.2.1 AIR-FILTERING APPLIANCE – An appliance consisting of an air-circulating fan and a mechanical filter.

2.2.2 AIR DEODORIZER – An appliance that has a fan and is intended to treat the air in a relatively small area by the dispersal of chemicals. A mechanical filter may be employed.

2.2.3 AIR FRESHENER – An appliance that has a fan and is intended to scent the air in a relatively small area by the dispersal of chemicals. A mechanical filter may be employed.

2.2.3.1 ATTIC FAN – A fan mounted on a building's roof or gable used to vent air out from the attic to the exterior of the building. Exhaust of the fan is typically capped with a dome lid or behind louvres to prevent exposure to weather.

2.2.3.1 added February 21, 2003

2.2.4 BLADE – A component of an impeller or an individual ″paddle″ of a ceiling-suspended fan.

2.2.5 BOX FAN – A portable fan sometimes referred to as a ″suitcase″ fan. This product consists of a front and back grill mounted to a central frame, typically rectangular or square in shape, with width and height dimensions each measuring greater than 16 inches. The fan is typically designed to be placed on the floor or desk during operation, but may be provided with hardware for window mounting.

Revised 2.2.5 effective May 12, 2007

2.2.6 CEILING INSERT FAN/LIGHT COMBINATION – An appliance consisting of a fan and a light which is installed through a hole in the ceiling surface.

2.2.7 CEILING-SUSPENDED FAN – A fan intended to be mounted to a ceiling outlet box or ceiling building structure, and has blades which rotate below the ceiling. Popularly called a ″paddle″ fan.

2.2.8 DESK FAN – A fan intended for use on a desk or table. Some desk fans are provided with keyhole slots for wall mounting.

2.2.9 DOWN-DRAFT FAN – A fan intended for installation adjacent to a grill or stove top, and that draws smoke down into an exhaust duct.

2.2.9.1 DRAIN PUMP – A pump provided in an evaporative cooler, in addition to the recirculating pump(s), intended to periodically purge the reservoir of mineral laden water.

2.2.9.1 added December 23, 2003

2.2.10 EVAPORATIVE COOLER – An appliance that introduces moisture into the air. This appliance incorporates a fan, filter, or heater, or all of these components. Some evaporative coolers have provision for connection to a duct.

UL COPYRIGHTED MATERIAL –
NOT AUTHORIZED FOR FURTHER REPRODUCTION OR
DISTRIBUTION WITHOUT PERMISSION FROM UL
Documents
Document Sharing Hub
Full document details: UL 507 2006

2.2.11 FLOOR INSERT FAN – An intake or exhaust fan installed in a raised floor.

2.2.12 HASSOCK FAN – A floor support fan resembling a foot rest.

2.2.12.1 HOUSEHOLD AND COMMERCIAL BLOWER INFLATOR TYPE FAN – used for inflating low-pressure products such as commercial rooftop balloon displays, and miscellaneous low-pressure inflatable products. These fans do not contain any type of pressurized-vessel .

2.2.12.1 revised May 12, 2005

2.2.13 IMPELLER – An assembly of blades about an integral hub.

2.2.14 THROUGH-WALL FAN – A fan installed through the wall or other structure and intended to draw air from the outside or exhaust air from the inside.

2.2.14 revised May 12, 2005

2.2.15 LOW VOLTAGE COMPONENT FAN – A component fan intended to be used in isolated secondary circuits and rated a maximum of 30 V rms (42.2 V peak) or 60 V dc.

2.2.16 PORTABLE APPLIANCE – A cord-connected appliance capable of being easily moved by hand from place to place (in normal use).

2.2.17 ROOM-TO-ROOM FAN – An appliance that is to be installed in a sleeve through an interior wall, and is intended to direct air from one room to another.

2.2.17 revised May 12, 2005

2.2.18 SECONDARY PROTECTION – A thermal cutoff or manual reset thermal protector provided with a motor that does not operate during the Locked Rotor Test of Section 40. Also referred to as ″back-up″ protection.

2.2.19 STATIONARY APPLIANCE – A cord-connected appliance that is intended to be fastened in place or located in a dedicated place.

2.2.20 VENTILATING-HOOD-FAN SHELF – A hood fan incorporating a shelf or a compartment to accommodate a microwave oven.

2.2.21 WALL-INSERT FAN – An intake or exhaust fan permanently attached in a wall without a sleeve.

2.2.21.1 WHOLE HOUSE FAN – A fan mounted on the attic-side of a ceiling, typically centrally located in a hallway. The fan is usually concealed behind a ceiling grill that opens and closes automatically. The fan is used to cool an entire house by drawing cooler outside air through open windows in the house and exhausting the hot room air through the attic to the building exterior.

2.2.21.1 added February 21, 2003

2.2.22 WINDOW-MOUNTED FAN – A window fan or a box fan intended for installation in a window.

UL COPYRIGHTED MATERIAL –
NOT AUTHORIZED FOR FURTHER REPRODUCTION OR
DISTRIBUTION WITHOUT PERMISSION FROM UL
Documents
Document Sharing Hub
Full document details: UL 507 2006

2.3 Additional terms

2.3.0 AIR DISTRIBUTION SYSTEM – For the purpose of determining smoke developed requirements for non-metallic enclosures and other parts of appliances covered by this Standard, an air distribution system is defined as a continuous passageway for the transmission of air that does not vent directly to the outdoors. For example, a building having several fans inter-connected with air ducts before venting to the outdoors.

2.3.0 added September 24, 2001

2.3.0.1 APPLIANCE COUPLER – A single-outlet, female contact device that is attached to a flexible cord as part of a detachable power supply cord to be connected to an inlet.

2.3.0.1 added September 24, 2001

2.3.1 ASKAREL – A generic term for a group of nonflammable synthetic chlorinated hydrocarbons used as electrical insulating media. Askarels of various compositional types are used. Under arcing conditions the gases produced, while consisting predominantly of noncombustible hydrogen chloride, can include varying amounts of combustible gases depending upon the askarel type.

2.3.1.1 BRANCH CIRCUIT, INDIVIDUAL – A branch circuit that supplies only one utilization equipment.

2.3.1.1 added September 24, 2001

2.3.1.2 CABINET – That part of a unit that encloses insulated wiring, electrical enclosures, moving parts, motors, or enclosed electrical parts.

2.3.1.2 added February 21, 2003

2.3.2 COOKING AREA – An area in close proximity (as defined in Figure 62.1) to a stove, range, or oven, where fumes, grease laden air, or the like may be present.

2.3.3 ENCLOSURE – That part of the product that:

a) Renders inaccessible all or any parts of the fan that present a risk of electric shock or injury to persons due to total or partial collapse with a resulting reduction of spacings, loosening or displacement of parts, or other serious defects; or

b) Retards propagation of flame initiated by electrical disturbances occurring within.

2.3.3.1 INLET – A male contact device that is mounted on a fan to provide an integral blade configuration for the connection of an appliance coupler.

2.3.3.1 added September 24, 2001

2.3.4 MOUNTING MEANS – Hardware to mount the fan to the building structure or to an outlet box.

2.3.4.1 OTHER SPACE USED FOR ENVIRONMENTAL AIR – Space used for environmental air-handling purposes other than ducts and plenums. It does not include habitable rooms or areas of buildings, the prime purpose of which is not air handling. The space over a hung ceiling used for environmental air handling purposes is an example of the type of other space to which this section applies.

2.3.4.1 added February 21, 2003

2.3.5 OUTLET BOX – As used in this standard, the term ″outlet box″ includes an outlet box or any other supporting system, usually field supplied, intended to enclose splices and wiring devices or to support a fan.

UL COPYRIGHTED MATERIAL –
NOT AUTHORIZED FOR FURTHER REPRODUCTION OR
DISTRIBUTION WITHOUT PERMISSION FROM UL
Documents
Document Sharing Hub
Full document details: UL 507 2006

2.3.6 RISK OF ELECTRIC SHOCK – A risk of electric shock exists at any part when:

a) The potential between the part and earth ground or any other accessible part is more than 30 V rms (42.4 V peak); and

b) The continuous current flow through a 1500 ohm resistor connected across the potential exceeds 0.5 mA.

2.3.7 SINGLE-OPERATION DEVICE – A device that incorporates a bimetal that is calibrated to open the motor circuit upon reaching a certain temperature and is resettable only by cooling to minus 35°C (minus 31°F), or lower.

2.3.8 TOTALLY ENCLOSED MOTOR – A motor that is enclosed to prevent the free exchange of air between the inside and outside of the enclosure for windings but not sufficiently enclosed to be airtight. Drainholes are acceptable.

2.3.9 TYPE F MOTOR – A thermally protected or impedance protected shaded pole motor employing class A insulation and marked ″ZPF″ or ″Impedance Protected F″, or ″TPF″ or ″Thermally Protected F″, where ″F″ stands for ″Fan″. These markings require compliance with requirements for Type F motors in this Standard.

2.3.10 USER SERVICING – Any form of servicing, such as routine cleaning and replacement of a fuse or a lamp, that is performed by personnel other than those trained to maintain the appliance.

2.3.11 VENTURI – A constricting throat in the air passage of an appliance which causes a pressure differential.

3 Components

3.1 Except as indicated in 3.2, a component of a product covered by this Standard shall comply with the requirements for that component.

3.2 A component is not required to comply with a specific requirement that:

a) Involves a feature or characteristic not required in the application of the component in the product covered by this standard, or

b) Is superseded by a requirement in this standard.

3.3 A component shall be used in accordance with its rating established for the intended conditions of use.

3.4 Specific components are incomplete in construction features or restricted in performance capabilities. Such components are intended for use only under limited conditions, such as certain temperatures not exceeding specified limits, and shall be used only under those specific conditions.

UL COPYRIGHTED MATERIAL –
NOT AUTHORIZED FOR FURTHER REPRODUCTION OR
DISTRIBUTION WITHOUT PERMISSION FROM UL
Documents
Document Sharing Hub
Full document details: UL 507 2006

4 Units of Measurement

4.1 Values stated without parentheses are the requirement. Values in parentheses are explanatory or approximate information.

4.2 Unless indicated otherwise, all voltage and current values mentioned in this standard are root mean square (rms).

5 Application of Requirements

5.1 This standard is comprised of two parts. Part 1 consists of requirements that are to be applied to all products covered by UL 507 unless otherwise specified. Part 2 consists of requirements for specific product types. These requirements supplement or modify the requirements in Part 1. For each product type, the requirements unique to that construction are presented in the same format as Part 1 (with headings for construction, performance, marking, and the like). A product's construction and intended use may result in the application of more than one set of requirements in Part 2. (For example: a ceiling-suspended fan intended for use in an agricultural environment shall comply with the requirements in Part 1, the requirements for ceiling-suspended fans in Part 2, and the requirements for fans used in agricultural buildings in Part 2.)

5.2 With respect to the text in this Standard, a requirement that applies only to a specific type of appliance, such as an evaporative cooler or an air-filtering appliance, is so identified by a specific reference in that requirement to the type involved. Absence of such specific reference, or use of the term ″appliance″ or ″fan″, indicates that the requirement applies to all appliances covered by this Standard unless the context indicates otherwise.

5.3 A household canopy- or hood-type unit, the electrical components of which are complete except for a fan or blower, may be investigated under the applicable requirements in this standard to determine whether the unit is acceptable for use with cooking equipment. A household wall- or ceiling-insert fan that is intended for use with such a separate hood may also be investigated to determine whether it is acceptable for use with cooking equipment. See 62.5.1 and 90.1.

5.4 A combination fan and light combination or a ceiling-suspended fan light kit shall comply with the applicable requirements of this standard and with the applicable requirements in the Standard for Luminaires, UL 1598.

5.4 revised February 21, 2003

5.5 An evaporative cooler that incorporates a heating element is investigated in accordance with the applicable requirements of this standard and with the applicable requirements for electric space-heating equipment.

UL COPYRIGHTED MATERIAL –
NOT AUTHORIZED FOR FURTHER REPRODUCTION OR
DISTRIBUTION WITHOUT PERMISSION FROM UL
Documents
Document Sharing Hub
Full document details: UL 507 2006

No Text on This Page

UL COPYRIGHTED MATERIAL –
NOT AUTHORIZED FOR FURTHER REPRODUCTION OR
DISTRIBUTION WITHOUT PERMISSION FROM UL

Documents
Document Sharing Hub

Full document details: UL 507 2006

CONSTRUCTION

6 Frame and Enclosures

6.1 General

6.1.1 An appliance shall be formed and assembled so that it has the strength and rigidity necessary to resist the abuses to which it is subjected, without causing a risk of fire, electrical shock, or injury to persons due to total or partial collapse with a resulting reduction of spacings, loosening or displacement of parts, or other serious defects.

6.1.2 A cast- or sheet-metal section of the enclosure shall not be thinner than the applicable value specified in Table 6.1.

Exception No. 1: A small area or surface that is curved or otherwise reinforced to provide equivalent mechanical strength is not required to comply with the specifications in the first column of thicknesses in Table 6.1.

Exception No. 2: A section of the enclosure made of uncoated or galvanized sheet steel or cast malleable iron shall not be thinner than the specifications in the first column of thicknesses in Table 6.1 unless such factors as the following are determined to be acceptable:

UL COPYRIGHTED MATERIAL –
NOT AUTHORIZED FOR FURTHER REPRODUCTION OR
DISTRIBUTION WITHOUT PERMISSION FROM UL
Documents
Document Sharing Hub
Full document details: UL 507 2006

a) Mechanical strength and impact resistance with regard to intended use and location of the appliance;

b) Resistance to corrosion;

c) Size and shape; and

d) Location on the appliance.

6.1.3 A fan having features intended to be attractive to children or to have play value or an appearance of play value shall:

a) Be provided with a marking that warns against use as a toy as described in 63.9; and

b) Not have any portion of the fan intended to be removed and utilized as an item with play value.

Exception: This requirement does not apply to a fan that complies with the Standard for Electric Toys, UL 696.

Table 6.1
Minimum thicknesses of enclosure metal

	At small, flat, unreinforced surfaces and at surfaces of a shape or size to provide adequate mechanical strength		At surfaces to which a wiring system is to be connected in the field		At large, unreinforced, flat surfaces	
Metal	**mm**	**(inch)**	**mm**	**(inch)[a]**	**mm**	**(inch)**
Die-cast metal	1.19	(3/64)	–		1.98	(5/64)
Cast malleable iron	1.59	(1/16)	–		2.38	(3/32)
Other cast metal	2.38	(3/32)	–		3.18	(1/8)
Uncoated sheet steel	0.66	(0.026)	0.81	(0.032)	0.66	(0.026)
Galvanized sheet steel	0.74	(0.029)	0.86	(0.034)	0.74	(0.029)
Nonferrous sheet metal	0.91	(0.036)	1.14	(0.045)	0.91	(0.036)

[a] A sheet-steel wall of thickness less than that specified shall not be used unless the area surrounding the knockout has a minimum thickness of 0.81 mm (0.032 inch).

6.1.4 The enclosure of an appliance shall prevent molten metal, burning insulation, flaming particles, and other ignited material from falling onto flammable materials, including the surface upon which the appliance is supported when the appliance is:

a) Installed in a remote location such as the location of an attic ventilator or a whole house ventilator; or

b) Thermostatically controlled.

Exception: This requirement does not apply to a thermostatically controlled fan intended for use in cooking areas and mounted directly above the cooking surface.

UL COPYRIGHTED MATERIAL –
NOT AUTHORIZED FOR FURTHER REPRODUCTION OR
DISTRIBUTION WITHOUT PERMISSION FROM UL
Documents
Document Sharing Hub
Full document details: UL 507 2006

6.1.5 The requirements in 6.1.4 necessitate the use of a metal barrier or a non-metallic barrier of a material having a zero flame spread rating when tested as described in the Standard for Tests for Surface Burning Characteristics of Building Materials, UL 723:

a) Under a motor unless:

1) The structural parts of the motor or of the appliance provide the equivalent of such a barrier (such as the use of metal louvers as bottom barriers);

2) The protection provided with the motor is such that no burning insulation or molten material falls to the surface that supports the appliance or into the wiring compartment when the motor is energized under each of the following fault conditions:

i) Open main winding;

ii) Open auxiliary winding;

iii) Starting switch short-circuited; and

iv) Capacitor of a permanent-split capacitor motor short-circuited and the rotor locked – the short circuit is to be applied before the motor is energized; or

3) The motor is provided with a thermal motor protector that prevents the temperature of the motor windings from exceeding 125°C (257°F) under the maximum load under which the motor runs without causing the protector to cycle and from exceeding 150°C (302°F) with the rotor of the motor locked; or

Exception: A direct drive fan motor is required to only be subjected to the locked rotor test.

4) The motor complies with the requirements for impedance-protected motors in the Standard for Overheating Protection for Motors, UL 2111, and the temperature of the motor winding does not exceed 150°C (302°F) during the first 72 hours of operation with the rotor of the motor locked.

b) Under wire, unless the wire:

1) Is thermoplastic wire which complies with the requirements of the Vertical Wires test in the Standard for Electrical Wires, Cables, and Flexible Cords, UL 1581, and is marked VW-1; or

2) Has at least equivalent characteristics as determined in the flame tests specified in the Standard for Thermoplastic-Insulated Wires and Cables, UL 83.

c) Under a switch, relay, solenoid, or similar component unless:

1) A short circuit or overload in the component does not result in a risk of fire; or

2) There are no openings in the enclosure through which molten metal, burning insulation, flaming particles, or other ignited material can fall.

UL COPYRIGHTED MATERIAL –
NOT AUTHORIZED FOR FURTHER REPRODUCTION OR
DISTRIBUTION WITHOUT PERMISSION FROM UL

Documents
Document Sharing Hub

Full document details: UL 507 2006

Exception: A terminal is not required to have a barrier.

6.1.5 revised February 21, 2003

6.1.6 The barrier mentioned in 6.1.5 shall be horizontal, shall be located as illustrated in Figure 6.1, and shall have an area in accordance with the illustration. Openings for drainage, ventilation, and the like, shall not be employed in the barrier unless such openings do not permit molten metal, burning insulation, or similar material, to fall onto flammable material.

6.1.7 A ventilating opening provided in the enclosure of an appliance or an externally mounted component of an appliance where the appliance is intended to be recessed into a wall or false ceiling shall not vent into a concealed space where the spread of a fire occurs undetected.

6.2 Wood enclosure parts

6.2.1 Wood shall not be employed as an appliance enclosure unless:

a) The enclosure is not intended for use in a cooking area, a bathroom, a damp location, or outdoors; and

b) The enclosure is in accordance with the Temperature Test requirements in Table 36.1, as applicable to wood.

Revised 6.2.1 effective June 1, 2004

6.2.2 A wood enclosure serving as an enclosure of uninsulated live parts shall be subjected to flammability testing and resistance to impact testing (5 ft-lbs) in accordance with the Standard for Polymeric Materials – Use in Electrical Equipment Evaluations, UL 746C.

Revised 6.2.2 effective June 1, 2004

6.3 Non-metallic enclosures

6.3.1 A non-metallic enclosure shall comply with the applicable mechanical and electrical property considerations, flammability, and thermal requirements as specified in the Standard for Polymeric Materials – Use in Electrical Equipment Evaluations, UL 746C. A 6.8 J (5 ft·lbf) impact value shall apply to all appliances when determining the impact resistance of polymeric enclosures. This impact value shall also be used for cold impact testing of appliances intended to be used or stored in cold environments, such as fans mounted in the crawl space or attic and outdoor use products.

Exception No. 1: A polymeric grille used in a ceiling or wall insert fan is not required to comply with the flammability requirements of UL 746C when:

a) The material has a minimum flame class rating of HB;

b) All live parts within the enclosure are insulated and the insulation thickness is 0.71 mm (0.028 inch) or greater; and

c) The grille is completely external when installed as intended.

Exception No. 2: A polymeric grille used in a fan intended to be mounted at least 2.1 m (7 feet) above the floor is not required to comply with the Resistance to Impact Test of UL 746C.

Revised 6.3.1 effective December 23, 2005

UL COPYRIGHTED MATERIAL –
NOT AUTHORIZED FOR FURTHER REPRODUCTION OR
DISTRIBUTION WITHOUT PERMISSION FROM UL

Documents
Document Sharing Hub

Full document details: UL 507 2006

6.3.2 Among the factors to be considered when judging a non-metallic enclosure, other than of polymeric material, or a magnesium enclosure shall be:

a) Mechanical strength;

b) Resistance to impact;

c) Moisture-absorptive properties;

d) Combustibility;

e) Resistance to arcing; and

f) Resistance to distortion at temperatures to which the enclosure is subjected under conditions of normal or abnormal use.

UL COPYRIGHTED MATERIAL –
NOT AUTHORIZED FOR FURTHER REPRODUCTION OR
DISTRIBUTION WITHOUT PERMISSION FROM UL

Documents
Document Sharing Hub

Full document details: UL 507 2006

Figure 6.1
Barrier

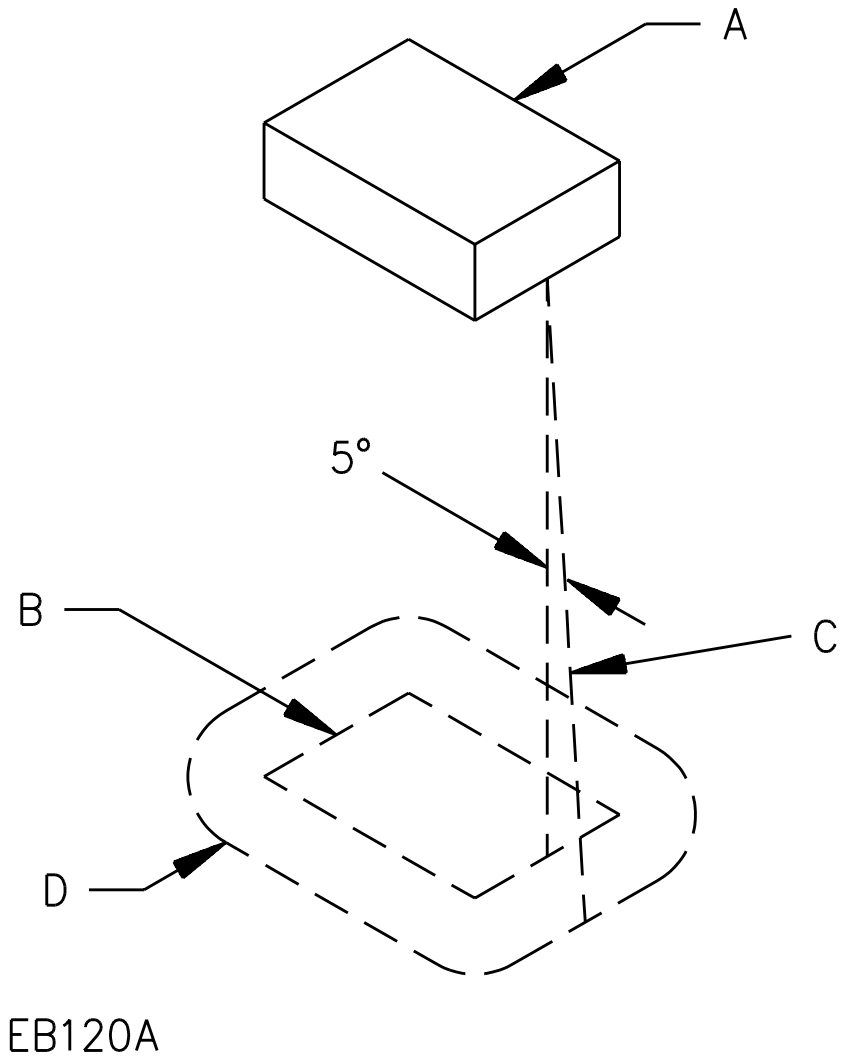

A – Region to be shielded by barrier. This will consist of the entire component if it is not otherwise shielded and will consist of the unshielded portions of a component that is partially shielded by the component enclosure or equivalent.

B – Projection of outline of component on horizontal plane.

C – Inclined line that traces out minimum area of barrier. The line is always:

1) Tangent to the component,
2) 5 degrees from the vertical, and
3) So oriented that the area traced out on a horizontal plane is maximum.

D – Location (horizontal) and minimum area for barrier. The area is that included inside the line of intersection traced out by the inclined line C and the horizontal plane of the barrier.

UL COPYRIGHTED MATERIAL –
NOT AUTHORIZED FOR FURTHER REPRODUCTION OR
DISTRIBUTION WITHOUT PERMISSION FROM UL
Documents
Document Sharing Hub
Full document details: UL 507 2006

6.3.3 A non-metallic enclosure of a fan employing a fluorescent light shall comply with the requirements of Section 136.3.

Exception: A polymeric enclosure that complies with the Ultraviolet Light Exposure Test in the Standard for Polymeric Materials – Use in Electrical Equipment Evaluations, UL 746C, does not need to comply with the requirements of Section 136.3.

Added 6.3.3 effective February 21, 2005

6.3.4 A wall or ceiling insert fan or ceiling insert fan/light combination that is provided with a polymeric housing shall be marked not for use in fire rated installations and for use in one- and two-family dwellings only, in accordance with 62.5.8 and 62.5.9.

Added 6.3.4 effective June 23, 2005

6.4 Non-metallic parts other than enclosures

6.4.1 Polymeric material used to enclose a metal housing that encloses insulated or uninsulated live parts, or used as a decorative part, shall be classed either 5VA, 5VB, V-0, V-1, V-2, or HB by the burning tests described in the Standard for Tests for Flammability of Plastic Materials for Parts in Devices and Appliances, UL 94.

Exception No. 1: Decorative parts are not required to be made of a material classed 5VA, 5VB, V-0, V-1, V-2, or HB when the part does not occupy a volume greater than 2 cubic centimeters (0.122 cubic inch), does not have any dimension greater than 3 cm (1.18 inch), and is located so it does not propagate flame from one area to another or bridge between a possible source of ignition and other ignitable parts.

Exception No. 2: A material is determined to be equivalent when it complies with the 12-mm (0.47 inch) flame test, the 19-mm (0.75-inch) flame test, or 127-mm (5-inch) flame test of the Standard for Polymeric Materials – Use in Electrical Equipment Evaluations, UL 746C, when flame tested as used in the equipment. The use of a flame-retardant coating applied to the inside of a polymeric enclosure is not acceptable unless the coating/material interface is found to be acceptable by separate investigation.

6.4.2 An impeller of polymeric material outside a motor shall not be located within 25.4 mm (1 inch) of an opening in the motor housing.

Exception No. 1: For all motor types except skeleton or open frame, an impeller is not prohibited from being within 25.4 mm of an opening in the motor housing when:

a) The material is classed as V-2, V-1, V-0, or 5V in accordance with the Standard for Tests for Flammability of Plastic Materials for Parts in Devices and Appliances, UL 94. The coil wrap that complies with the 127 mm (5 inches) end product flame test as described in the Standard for Polymeric Materials – Use in Electric Equipment Evaluations, UL 746C, does not need to possess a 5VA flame rating;

b) The material complies with the requirements for enclosure flammability using a 19-mm (3/4-inch) flame, in accordance with the Standard for Polymeric Materials – Use in Electrical Equipment Evaluations, UL 746C; or

c) No motor opening within 25.4 mm of the blade has a dimension more than 6.75 mm (17/64 inch) or an area more than 35.48 mm^2 (0.055 square inch), and no more than six such openings are provided;

d) Deleted

UL COPYRIGHTED MATERIAL –
NOT AUTHORIZED FOR FURTHER REPRODUCTION OR
DISTRIBUTION WITHOUT PERMISSION FROM UL
Documents
Document Sharing Hub

e) The material has a hot wire ignition rating of at least 7 seconds as described in the Standard Test Method for Ignition of Materials by Hot Wire Sources, ASTM D3874;

f) The fan employs a thermally protected motor to drive the impeller and complies with the test requirements in Section 50, Impeller Ignition Test; or

g) The fan complies with the requirements for unattended areas as specified in Sections 139 and 140.

Exception No. 2: For bobbin-wound skeleton motors employed in a product other than ceiling-insert, wall-insert fans, or rangehoods, an impeller is not prohibited from being within 25.4 mm of the motor windings when:

a) The impeller is of material classed HB or less flammable in accordance with the Standard for Tests for Flammability of Plastic Materials for Parts in Devices and Appliances, UL 94;

b) The coil is completely covered with insulation at least 0.8 mm (1/32 inch) thick; and

c) The space between the coil covering and bobbin does not exceed 0.8 mm total.

Exception No. 3: For bobbin-wound skeleton motors employed in a ceiling-insert fan, wall-insert fan, or rangehood, an impeller is not prohibited from being within 25.4 mm of the motor windings when the motor complies with the requirements of 19.6.

Effective date for 6.4.2 changed from June 23, 2005 to December 23, 2005

6.4.3 A polymeric impeller for a fan intended to be installed in an area exposed to temperatures higher than 40°C (104°F), such as an attic fan or a fan intended for use in cooking areas, shall be molded from polymeric material having:

a) A heat deflection temperature under a minimum 455.07 kPa (66 psi) load of at least 75°C (167°F), determined as specified in the Standard for Polymeric Materials – Short Term Property Evaluations, UL 746A; and

b) A relative mechanical temperature index without impact of at least 60°C (140°F) determined as specified in the Standard for Polymeric Materials – Long Term Property Evaluations, UL 746B.

6.4.4 Foamed thermoplastic shall be classed HF-2 or HF-1.

6.4.5 A thermoplastic damper shall be classed HB, V-2, V-1, V-0, or 5V.

6.4.6 A thermoplastic part that is not decorative and that does not serve as an enclosure shall be classed HB, V-2, V-1, V-0, or 5V.

UL COPYRIGHTED MATERIAL –
NOT AUTHORIZED FOR FURTHER REPRODUCTION OR
DISTRIBUTION WITHOUT PERMISSION FROM UL
Documents
Document Sharing Hub
Full document details: UL 507 2006

7 Flame Spread and Smoke Developed Requirements for Non-Metallic Enclosures and Other Parts of Permanently Connected Equipment

7.1 A non-metallic enclosure or part that provides a barrier between a building cavity and internal parts of a fan that is intended to be permanently connected electrically, shall have a flame spread rating of zero in accordance with the Standard for Test for Surface Burning Characteristics of Building Materials, UL 723.

Exception No. 1: A fan grille, duct adapter, or other part that is installed exterior to the enclosure or part described in 7.1 is not required to comply with the flame spread requirements.

Exception No. 2: A material having a flame-spread rating of 25 or less, as determined by the Standard Test Method for Surface Flammability of Materials Using a Radiant Heat Energy Source, ASTM E162, is an alternative.

Exception No. 3: Deleted

Exception No. 4: This requirement does not apply to sound deadening material inside a fan enclosure that is rated HB or HF-2.

Exception No. 5: Deleted

Revised 7.1 effective December 23, 2005

7.2 Deleted February 21, 2003

7.3 Compliance with the Fire Test for Heat and Visible Smoke Release for Discrete Products and Their Accessories Installed in Air-Handling Spaces, UL 2043, is considered to meet the flame spread requirement of 7.1.

7.3 added February 21, 2003

8 Accessibility of Moving Parts

8.1 General

8.1.1 Deleted February 21, 2003

8.1.2 The rotor of a motor, a pulley, a belt, a gear, an impeller, or other moving parts shall be enclosed, guarded, or installed at a sufficient height per Section 8.2 or Section 8.3, as applicable, to reduce the risk of injury to persons.

Exception No. 1: This requirement does not apply to a part or portion of a part that is exposed to enable an appliance to perform its intended function.

Exception No. 2: This requirement does not apply to large commercial-industrial evaporative coolers intended for use in warehouses and similar spaces.

8.1.2 revised February 21, 2003

UL COPYRIGHTED MATERIAL –
NOT AUTHORIZED FOR FURTHER REPRODUCTION OR
DISTRIBUTION WITHOUT PERMISSION FROM UL
Documents
Document Sharing Hub
Full document details: UL 507 2006

8.1.3 An impeller shall be constructed of a material and in such a manner to reduce the risk of its breakage or its release of parts that could cause a risk of injury to persons.

8.1.3 revised February 21, 2003

8.1.4 Polymeric guards which are used for protecting the impeller, and also function as an electrical enclosure, shall be subjected to the following tests as applicable:

a) For a guard of un-insulated live parts, the guard shall comply with the Resistance to Impact Test of the Standard for Polymeric Materials – Use in Electrical Equipment Evaluations, UL 746C. The impact used is to be 6.8 J (5 ft·lbf).

b) For a guard of insulated live parts which have an insulation thickness of 0.71 mm (0.028 inch) or greater, the guard shall comply with Section 47, Impact Test on Guards and Section 48, Static Force Test on Guards.

8.2.12 revised and relocated as 8.1.4 February 21, 2003

8.1.5 An impeller shall be secured to the shaft, with consideration given to such factors as the size and weight of the impeller, motor power, mounted position, thrust direction, and the risk of injury to persons if breakage occurs. A reversible fan shall not rely solely on friction between the impeller and a nut turned onto a threaded shaft.

49.2 relocated as 8.1.5 February 21, 2003

8.2 Portable fans and window fans

8.2.1 Other than as described in 8.2.2, a moving part that causes a risk of injury to persons shall be guarded or enclosed.

8.2.2 A moving part such as a rotating grille, rotating air deflector driven by an airstream, or an impeller is not required to be guarded when the moving part complies with all of the following applicable requirements:

a) When motor driven, the impeller:

1) Does not weigh more than 45 g (0.1 pound);

2) Is not more than 203.20 mm (8 inches) in diameter; and

3) Is not more than 3.2 mm (1/8 inch) thick and has no reinforcement beyond the nose cone.

b) When driven by an airstream, the moving part:

1) Does not weigh more than 454 g (1 pound);

2) Does not have a diameter that exceeds 508 mm (20 inches); and

3) Complies with Section 52, Drop Test, without breakage of the blades.

c) The moving part:

1) Does not rotate faster than 2000 revolutions per minute; and

UL COPYRIGHTED MATERIAL –
NOT AUTHORIZED FOR FURTHER REPRODUCTION OR
DISTRIBUTION WITHOUT PERMISSION FROM UL
Documents
Document Sharing Hub
Full document details: UL 507 2006

2) Complies with the requirements specified in Section 43, Unguarded Impeller Tests, Section 47, Impact Test on Guards, and Section 52, Drop Test, without breakage of the blades.

d) The output power of the motor driving the part is not more than 35 watts (0.047 horsepower).

e) The ″K″ factor of the moving part determined as specified in 8.2.5 is less than 732.

f) A blade:

1) Employs a rounded leading edge with a diameter of at least 3.2 mm (1/8 inch); and

2) Is composed of material having:

i) A tensile strength of at least 6.895 MPa (1000 psi), in accordance with ASTM D638; and

ii) Elongation of not more than 206.85 MPa (30,000 psi), in accordance iwth ASTM D790.

g) An air deflector driven by the airstream has no leading edge and all exposed surfaces are smooth and well rounded.

Exception No. 1: An unguarded impeller is not required to comply with the requirements of 8.2.2(a)(1), (a)(2), (d), and (e) when the fan complies with 8.2.3.

Exception No. 2: An unguarded impeller is not required to comply with the requirements of 8.2.2(f)(2)(I), (f)(2)(ii), 8.2.2(b)(3), and 8.2.2(c)(2) if the impeller is molded of a component foam material rated a minimum HF-2.

8.2.2 revised December 23, 2003

8.2.3 An unguarded impeller that complies with the Exception to 8.2.2 shall produce an impact force of 175 N (39.34 pounds) or less.

8.2.4 Factors to be considered when judging whether a moving part or a portion of a part is likely to cause a risk of injury to persons shall include, but are not limited to:

a) The portion of the blade being contacted – trailing edge, leading edge, or periphery;

b) The blade material and angle, and type and sharpness of exposed edge; and

c) The energy available.

UL COPYRIGHTED MATERIAL –
NOT AUTHORIZED FOR FURTHER REPRODUCTION OR
DISTRIBUTION WITHOUT PERMISSION FROM UL
Documents
Document Sharing Hub
Full document details: UL 507 2006

8.2.5 Conventional designs of impellers meet the requirement of being guarded when:

a) The relationship between mass (W) in kg, radius (r) in mm, and speed (N) in revolutions per minute is such that K in the following equation is less than 29264:

$$K = 6 \times 10^{-7} (Wr^2N^2)$$

b) The guarding is such that the probe illustrated in Figure 8.1 cannot touch the leading edge of the blade and hub when inserted as described in 8.2.6. For a reversible fan, both edges of the blade are considered leading edges. When K is greater than 29264, the probe shall not touch any part of the impeller.

8.2.6 The portion of an impeller that entails a risk of injury to persons shall be guarded so that the probe illustrated in Figure 8.1 does not touch the part when inserted with a force of 4.45 N (1 pound) for a maximum of 5 seconds through any opening in the guard.

Figure 8.1
Probe for impellers of portable appliances

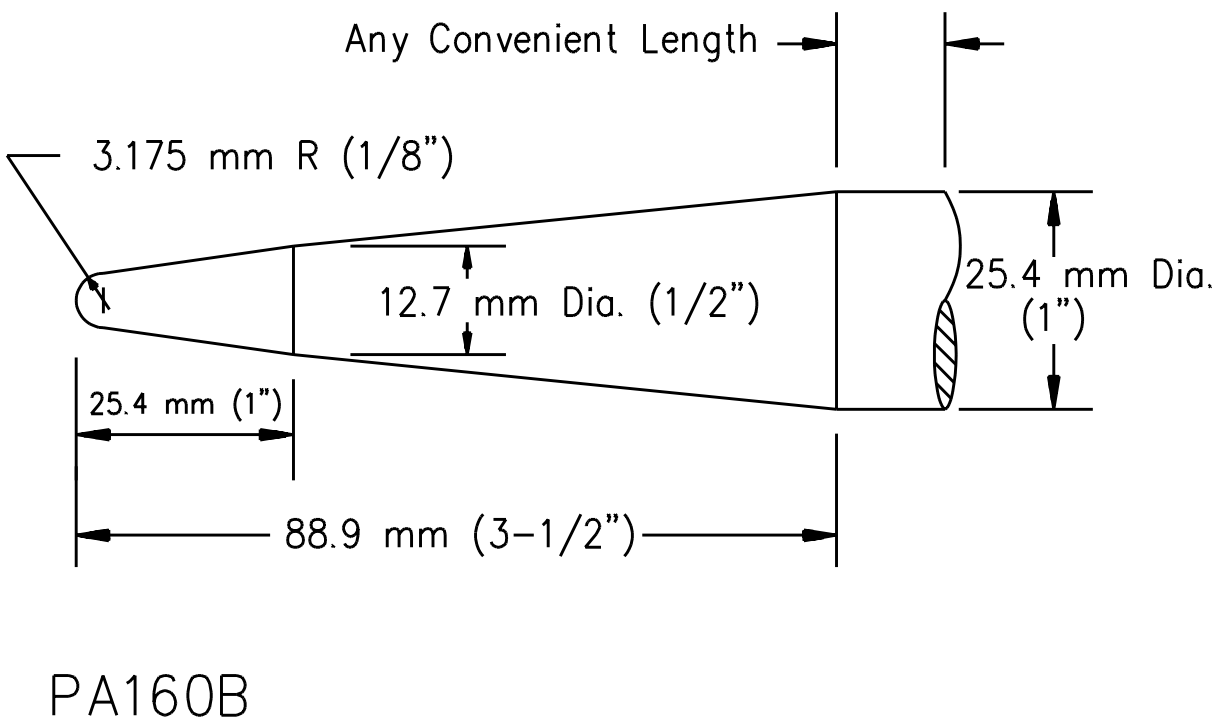

8.2.7 During an examination to determine whether an appliance complies with the requirements specified in 8.2.6, the guards and impellers of desk and stand fans are not to be removed before examination.

8.2.8 When a part used to comply with the requirement in 8.2.6 is made of a polymeric material, a sample is to be exposed for 7 hours to air at 70°C (158°F). While in the oven, the part is to be assembled to the fan and the fan is to be in its intended operating position. After the sample has cooled to room temperature, the probe illustrated in Figure 8.1 is to be inserted through each opening in the guard. The probe shall not be able to touch any portion of an impeller that can cause a risk of injury to persons.

UL COPYRIGHTED MATERIAL –
NOT AUTHORIZED FOR FURTHER REPRODUCTION OR
DISTRIBUTION WITHOUT PERMISSION FROM UL
Documents
Document Sharing Hub
Full document details: UL 507 2006

8.2.9 A guard employed to comply with the requirement in 8.2.6 shall be attached to the fan in any of the following ways:

a) Permanently;

b) By means requiring the use of a tool or tools for removal; or

c) By means not requiring the use of a tool or tools for removal provided that the securing means remain attached to the front or rear guard; and

1) Two separate motions, for example push and turn, are required to disengage the securing means; or

2) A force of 22.24 N (5 pounds) is required to disengage the securing means.

8.2.10 The removal force specified in 8.2.9(c)(2) is to be measured after conditioning the holding means by removing and replacing the guard ten times in the intended manner.

8.2.11 An enclosure, a frame, a guard, a handle, or other part of the fan that is exposed to contact during intended operation shall not be sufficiently sharp to constitute a risk of injury to persons.

8.2.12 Revised and relocated as 8.1.4 February 21, 2003

8.2.13 Non-metallic impellers on portable fans and window fans shall comply with Section 49, Impeller Test for Free Standing Fans and Window Fans.

8.2.13 added February 21, 2003

8.3 Stationary fans and permanently connected fans

8.3.0 In accordance with 8.1.2, the design and intended use of a stationary fan or of a fan intended to be permanently connected electrically is to be considered when evaluating an enclosure or guard.

8.3.0 added February 21, 2003

8.3.1 The impeller of a stationary or permanently connected fan shall be constructed so that it cannot be contacted by the probe illustrated in Figure 8.2.

Exception No. 1: An impeller of an in-wall fan, or a plenum-mounted fan with the grille flush with the ceiling, is not required to be guarded when it is mounted at least 2.1 m (7 feet) above the floor and marked as specified in 63.4.

Exception No. 1A: An impeller of a wall- or ceiling- insert fan shall comply with 8.3.3 – 8.3.4.

Exception No. 2: An impeller of a stationary or permanently connected nonresidential fan is not required to be guarded when it is mounted at least 2.1 m (7 feet) above the floor and marked as specified in 63.4 and either 62.1.10 or 111.1.

Exception No. 3: Residential attic fans and whole house fans shall comply with 8.3.5 and 8.3.6.

Exception No. 4: Ceiling-suspended fans shall comply with Section 70.2 and 72.1.

Exception No. 5: Fans for use in cooking areas shall comply with 91.3.1 – 91.3.3.

UL COPYRIGHTED MATERIAL –
NOT AUTHORIZED FOR FURTHER REPRODUCTION OR
DISTRIBUTION WITHOUT PERMISSION FROM UL
Documents
Document Sharing Hub
Full document details: UL 507 2006

Exception No. 6: The discharge side of duct connected fans as described in 8.3.7 need not comply with this requirement.

8.3.1 revised December 23, 2005

8.3.2 A stationary or permanently connected fan shall be constructed so that any moving parts, other than the impeller, that cause a risk of injury to persons cannot be contacted by the probe illustrated in Figure 8.2.

Figure 8.2
Probe for fan impellers and other moving parts of stationary fans and fans intended to be permanently connected electrically

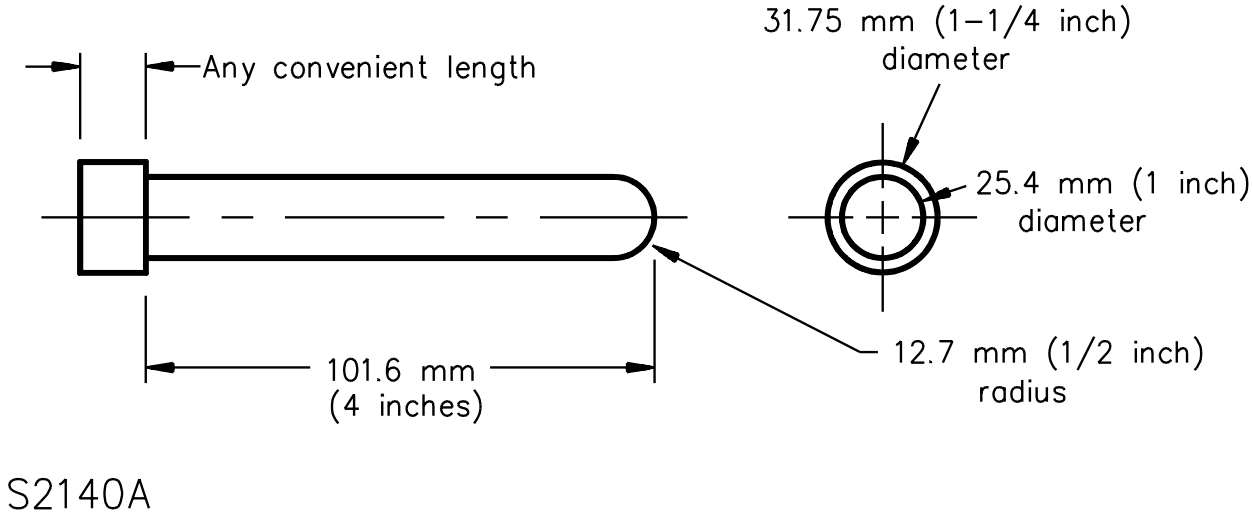

8.3.3 The 25.4-mm (1-inch) diameter probe as illustrated in Figure 8.2, when inserted through an opening on the air-inlet side of a wall- or ceiling-insert fan, shall not contact a moving part that presents a risk of injury to a person.

Exception No. 1: This requirement does not apply to a wall- or ceiling-insert fan provided with a reusable metal filter or marked to be mounted at least 2.1 m (7 feet) above floor level. See 63.4.

Exception No. 2: This requirement does not apply to a wall- or ceiling-insert fan having an impeller diameter of 254 mm (10 inches) or less, when:

a) The wall- or ceiling-insert fan is marked as specified in 62.5.7; and

b) The installation instructions specified in 64A.6 are provided.

Exception No. 3: This requirement does not apply to a wall- or ceiling-insert fan having an impeller 152.4 mm (6 inches) or less in diameter.

Revised 8.3.3 effective December 23, 2005

UL COPYRIGHTED MATERIAL –
NOT AUTHORIZED FOR FURTHER REPRODUCTION OR
DISTRIBUTION WITHOUT PERMISSION FROM UL
Documents
Document Sharing Hub
Full document details: UL 507 2006