UL 508C

STANDARD FOR SAFETY

Power Conversion Equipment

Documents
Document Sharing Hub

Full document details: UL 508C 2018

Documents
Document Sharing Hub

Full document details: UL 508C 2018

UL Standard for Safety for Power Conversion Equipment, UL 508C

Fourth Edition, Dated May 16, 2016

Summary of Topics

This revision of ANSI/UL 508C includes the Addition of Requirements for Modular Drive Systems.

Text that has been changed in any manner or impacted by UL's electronic publishing system is marked with a vertical line in the margin.

The new and revised requirements are substantially in accordance with Proposal(s) on this subject dated November 11, 2016, September 8, 2017 and March 2, 2018.

All rights reserved. No part of this publication may be reproduced, stored in a retrieval system, or transmitted in any form by any means, electronic, mechanical photocopying, recording, or otherwise without prior permission of UL.

UL provides this Standard ″as is″ without warranty of any kind, either expressed or implied, including but not limited to, the implied warranties of merchantability or fitness for any purpose.

In no event will UL be liable for any special, incidental, consequential, indirect or similar damages, including loss of profits, lost savings, loss of data, or any other damages arising out of the use of or the inability to use this Standard, even if UL or an authorized UL representative has been advised of the possibility of such damage. In no event shall UL's liability for any damage ever exceed the price paid for this Standard, regardless of the form of the claim.

Users of the electronic versions of UL's Standards for Safety agree to defend, indemnify, and hold UL harmless from and against any loss, expense, liability, damage, claim, or judgment (including reasonable attorney's fees) resulting from any error or deviation introduced while purchaser is storing an electronic Standard on the purchaser's computer system.

Documents
Document Sharing Hub

Full document details: UL 508C 2018

No Text on This Page

Documents
Document Sharing Hub

Full document details: UL 508C 2018

MAY 16, 2016
(Title Page Reprinted: June 11, 2018)

ANSI/UL 508C-2018

UL 508C

Standard for Power Conversion Equipment

First Edition – December, 1993
Second Edition – November, 1996
Third Edition – May, 2002

Fourth Edition

May 16, 2016

This ANSI/UL Standard for Safety consists of the Fourth Edition including revisions through June 11, 2018.

The most recent designation of ANSI/UL 508C as an American National Standard (ANSI) occurred on June 11, 2018. ANSI approval for a standard does not include the Cover Page, Transmittal Pages, and Title Page.

Comments or proposals for revisions on any part of the Standard may be submitted to UL at any time. Proposals should be submitted via a Proposal Request in UL's On-Line Collaborative Standards Development System (CSDS) at https://csds.ul.com.

UL's Standards for Safety are copyrighted by UL. Neither a printed nor electronic copy of a Standard should be altered in any way. All of UL's Standards and all copyrights, ownerships, and rights regarding those Standards shall remain the sole and exclusive property of UL.

COPYRIGHT © 2018 UNDERWRITERS LABORATORIES INC.

Documents
Document Sharing Hub

Full document details: UL 508C 2018

No Text on This Page

Documents
Document Sharing Hub

Full document details: UL 508C 2018

CONTENTS

INTRODUCTION

1 Scope 8
2 Glossary 8
3 Units of Measurement 10
4 Components 10
5 Undated References 10

ENCLOSURE CONSTRUCTION

6 Frames and Enclosure 10
6.1 General 10
6.2 Cast metal 11
6.3 Sheet metal 11
6.4 Doors and covers 15
6.5 Polymeric 19
6.6 Bonding 20
6.7 Resistance measurement 22
6.8 Openings in enclosure 22
6.9 Accessibility of live parts 22
6.10 Ventilating openings 25
6.11 Forced ventilation 26
6.12 Observation windows 26
6.13 Wire bending space 26

ENVIRONMENTAL RATING RELATED ENCLOSURE CONSTRUCTION

7 General 27
8 Protection Against Corrosion 27

ENVIRONMENTAL RATING RELATED ENCLOSURE PERFORMANCE

9 General 28

NON-ENVIRONMENTAL RATING RELATED ENCLOSURE PERFORMANCE

10 General 30
11 Securement of Snap-On Cover Test 30

INSTRUCTIONS AND MARKINGS PERTAINING TO ENCLOSURES

12 Permanence of Marking 30
13 Details 31

DEVICE CONSTRUCTION

14 General 31
15 Protection Against Corrosion 31
16 Provisions for Mounting 31
17 Insulating Material 32

Documents
Document Sharing Hub
Full document details: UL 508C 2018

18 Means for Switching 34
19 Live Parts 35
20 Drive Protection 35
20.1 General 35
20.2 Control circuit wiring 36
20.3 Control circuit transformer 38
20.4 Control circuit wiring and transformer combination 39
21 Capacitors 40
22 Fuseholders 40
23 Internal Wiring 41
23.1 General 41
23.2 Routing 41
23.3 Flexing 41
23.4 Color coding 42
23.5 Splices and connections 42
23.6 Splice insulation 43
24 External Interconnections 43
24.1 Open equipment 43
24.2 Enclosed equipment 43
24.3 Interconnecting cords and cables 43
25 Transformers 44
26 Blower Motors 44
27 Supply Connections 45
27.1 General 45
27.2 Permanently connected equipment 45
27.3 Tapped holes for conduit 45
27.4 Knockouts 46
27.5 Wiring terminals and leads 46
27.6 Cord-connected equipment 49
28 Cord-Connected Programming and Diagnostic Units 50
29 Risk of Electric Shock 51
30 Risk of Fire 51
31 Lithium Battery Circuits 52
32 Isolated Secondary Circuits 52
32.1 General 52
32.2 Class 2 circuits 55
32.3 Limited voltage/current circuits 55
32.4 Limited voltage circuits 56
32.5 Isolated power supply circuits 56
32.6 Limited energy circuits 57
32.7 Limiting impedance circuits 57
33 Limited Voltage Circuit Overcurrent Protection 59
33.1 General 59
33.2 Primary overcurrent protection 59
33.3 Secondary overcurrent protection 60
34 Separation of Circuits 60
35 Isolation Devices 61
36 Spacings 62
36.1 General 62
36.2 Spacings other than at field-wiring terminals 65
36.3 Spacings at field-wiring terminals for pollution degree 2 environments 67
36.4 Spacings for drives having general ratings for pollution degree 2 environments 67
36.5 Spacings for drives having limited ratings 68

Documents
Document Sharing Hub
Full document details: UL 508C 2018

36.6 Spacings for drives having other ratings 68
36.7 Spacings for products with known and controlled transient voltages 68
36.8 Spacings for drives used in pollution degree 2 environments 69
36.9 Spacings for drives evaluated in accordance with UL 840 69
36.10 Testing in lieu of spacings 70
36.11 Insulating material used as a barrier in lieu of spacings 71
36.12 Clamped insulating joints in lieu of spacings 73
36.13 Spacings between live parts and conduit openings 75
37 Grounding 75
38 Accessories 76

DEVICE PERFORMANCE

39 General 76
40 Temperature Test 78
41 Abnormal Operation Tests 83
41.1 General 83
41.2 Contactor overload 86
41.3 Single phasing 86
41.4 Inoperative blower motor 86
41.5 Clogged filter 86
41.6 Current limiting control 87
42 Full-Load Motor-Running Current Tables 87
43 Solid State Motor Overload Protection Test 88
43.1 General requirements 88
43.2 Test set-up 89
43.3 Thermal memory retention test (shutdown) 89
43.4 Thermal memory retention test (loss of power) 90
43.5 Speed sensitivity test 90
44 Dielectric Voltage-Withstand Test 90
44.1 General 90
44.2 Clamped joints 91
45 Short Circuit Test – Standard Fault Currents 91
45.1 General 91
45.2 Test circuit current/voltage 94
45.3 Input/output wiring connection 97
45.4 Ground fuse 98
45.5 Enclosures 98
45.6 Mounting 98
45.7 Openings 99
45.8 Branch circuit short circuit protection 99
46 Group Installation (Optional) 101
46.1 General 101
46.2 Sample selection 102
46.3 Short circuit test – group installation for standard fault currents 103
46.4 Short circuit test – group installation for high fault currents 104
47 Calibration of Short Circuit Test Circuits. 104
47.1 10,000 amperes or less 104
47.2 More than 10,000 amperes 105
48 Short Circuit Test – High Fault Currents 108
49 Transient-Voltage-Surge Suppression Test 111
50 Accelerated Aging Test 112
51 Breakdown of Components Test 113

Documents
Document Sharing Hub
Full document details: UL 508C 2018

52 Breakdown of Components Test – Group Installation for Standard Fault Currents 114
53 Breakdown of Components Test – Group Installation for High Fault Currents 115
54 Printed Wiring Board Abnormal Operation Test 115
55 Secondary Circuits Test 116
55.1 General 116
55.2 Limited voltage/current secondary test 117
55.3 Limited energy secondary test 117
55.4 Isolated power supply capacity test 117
55.5 Limited voltage secondary test 117
55.6 Limiting impedance test 118
56 Strain Relief Test 119
57 Push-Back Relief Test 119
58 Leakage Current Test 120
59 Rating 122

DEVICE MARKING

60 General 123
61 Overload, Over-Current, and Over-Speed Protection 124
62 Branch Circuit Short Circuit Protection 125
63 Branch Circuit Short Circuit Protection for Group Installation 126
64 Control Circuit Protection 127
65 Class 2 Circuit Markings 127
66 Wiring Terminal Markings 128
67 Cautionary Markings 130
68 Instructions and Markings Pertaining to Accessories 132
69 Marking Location 132

MANUFACTURING AND PRODUCTION LINE TEST

70 Circuit Functionality Evaluation 136
71 Production-Line Dielectric Voltage-Withstand Test 136
72 Production-Line Grounding-Continuity Test 138
73 Production-Line Polarization-Continuity Test – Cord and Plug Connected Equipment 138

COOLING SYSTEMS

74 General 138
75 Construction 139
76 Performance 140
76.1 Loss of cooling medium circulation test 140
76.2 Hydrostatic pressure test 140A
77 Plenum Rated Drives 140A

MODULAR DRIVE SYSTEMS

78 General 140B
79 Construction 140D
79.1 General 140D
79.2 Primary circuit conductor protection 140E
79.3 Common DC bus conductor protection 140F
79.4 DC tap conductor protection 140H
79.5 Load wire protection 140J

UL COPYRIGHTED MATERIAL –
NOT AUTHORIZED FOR FURTHER REPRODUCTION OR
DISTRIBUTION WITHOUT PERMISSION FROM UL

This document is only permissible for use by Anonymous User of University of Toronto. 7/5/2019 7:19:24 AM

Documents
Document Sharing Hub

Full document details: UL 508C 2018

80 Performance 140L
80.1 General 140L
80.2 Converter overload protection test 140L
80.3 Breakdown of components test 140M
80.4 Short circuit test, standard and high fault current 140N
81 Ratings 140O
82 Markings 140P
83 Instruction Manual 142

APPENDIX A

Standards for Components. A1

Documents
Document Sharing Hub

Full document details: UL 508C 2018

INTRODUCTION

1 Scope

1.1 These requirements cover open or enclosed equipment that supplies power to control a motor or motors operating at a frequency or voltage different than that of the input supply. These requirements also cover power-supply modules, input/output modules, Silicon Controlled Rectifier (SCR) or Transistor output modules, dynamic braking units, and input/output accessory kits for use with power conversion equipment.

1.2 This equipment is for use in ordinary locations in accordance with Articles 430 and 440 of the National Electrical Code, NFPA 70.

1.3 These requirements cover devices rated 1500 volts or less.

1.4 Equipment intended for use in hazardous locations as defined by the National Electrical Code, NFPA 70, shall be evaluated to the Standard for Explosion-Proof and Dust-Ignition-Proof Electrical Equipment for Use in Hazardous (Classified) Locations, UL 1203.

2 Glossary

2.1 For the purpose of this standard, the following definitions apply.

2.2 AMBIENT TEMPERATURE – The temperature of the room or chamber in which the equipment under test is located.

2.2.1 COMMON DC BUS CONDUCTOR – The conductors between the output of a converter section and the DC tap conductors of a modular drive assembly. Common DC bus conductors may have internal connections, external connections, or be modular DC bus conductors.

2.2.2 COMMON DC BUS CONDUCTOR, MODULAR – An assembly to which the converter section and inverter sections are connected or “plugged in” and that include integral connections for the sections and the conductors between the sections. A modular drive system using this assembly does not incorporate DC tap conductors. The connections for modular common dc bus conductors are internal connections.

2.3 CONTROL CIRCUIT – A circuit that carries the electric signals directing the performance of a controller, and does not carry the main power circuit (see IEEE Standards Dictionary of Electrical and Electronic Terms). A control circuit is mostly limited to 15 amperes.

2.3.1 CONVERTER OVERLOAD PROTECTION – Circuitry integral to the converter that acts to protect the converter and associated conductors under overload conditions by reducing current flow through the converter. The overload protection circuitry is usually comprised of hardware, firmware and software components.

2.3.2 CONVERTER SECTION (DC SUPPLY) – An AC/DC converter that supplies DC power to modular inverter sections via common DC bus conductors. The converter section may consist of a simple rectifier construction or it may also contain a DC/AC converter, to return regenerative energy to the supply circuit.

Documents
Document Sharing Hub
Full document details: UL 508C 2018

2.3.3 DC TAP CONDUCTORS – The conductors between the common DC bus conductors and the input of the inverter sections. DC tap conductors may have internal or external connections.

2.4 DRIVE SERIES – A number of drives produced as a related group, using similar design throughout the group. Examples of grouping include but are not limited to specific ratings, application or function.

2.5 ENCLOSURE, ENCLOSED DEVICE – Industrial control equipment provided with a suitably rated enclosure. (See the Standard for Enclosures for Electrical Equipment, UL 50 for details.)

2.6 ENCLOSURE, OPEN DEVICE – Industrial control equipment with an incomplete or partial enclosure.

2.6.1 EXTERNAL CONNECTIONS – Connections between two or more modules of a modular drive system in which the conductors are not entirely contained within the same end product enclosure as the components that are being connected.

2.7 GROUP INSTALLATION – A motor branch circuit for two or more motors, or one or more motors with other loads and protected by a circuit breaker or a single set of fuses.

2.8 INSULATED LIVE PART – An electrically live part that is provided with complete protection against electric shock and does not rely upon other parts for insulation.

2.8.1 INTERNAL CONNECTIONS – Connections between two or more modules of a modular drive system in which the conductors are entirely contained within the same end product enclosure as the modules that are being connected.

2.8.2 INVERTER SECTION – A DC/AC inverter intended to drive a motor load.

2.8.3 LOAD WIRE – A wire between the output of an inverter section and the motor controlled by the inverter.

2.8.4 MODULAR DRIVE SYSTEM – A modular drive system is an arrangement of a single converter and two or more inverter sections which are sold by the same company and intended to be used together to control multiple motors, but where a single inverter controls a single motor. The converter and inverter sections of a modular drive system are designed to facilitate field connection (field wiring), however they may also be supplied as a factory-assembled system. The converter and inverter sections of a modular drive system may be designed to connect together using any of the following methods: printed wiring board(s), factory-made wiring harness(es) / cabling, field wiring, or busbars. Connections between converter and inverters may be internal or external. Modular drive systems often support a variety of configurations and ratings.

2.8.5 OVERALL ASSEMBLY – An arrangement of a single converter and multiple inverter modules, with or without motors as shown in Figure 78.1, in a suitable enclosure or several enclosures mechanically attached and electrically connected together. The overall assembly forming a modular drive system can be either factory assembled or assembled in the field as per the instruction manual using factory supplied sections or parts and with or without factory supplied electrical connections for field wiring. Where the system is in more than one enclosure and the enclosures are to be mechanically attached in the field, the conductors between enclosures are contained within the final assembly of enclosures and do not become part of the installation (building) or machine wiring as per the instruction manual.

Documents
Document Sharing Hub
Full document details: UL 508C 2018

2.9 POLLUTION DEGREE 1 – No pollution or only dry, nonconductive pollution occurs. The pollution has no influence. Pollution degree 1 is obtainable by the encapsulation or hermetic sealing of the product. Typical constructions that meet this requirement are:

a) The use of conformal coating on printed wiring board foil traces that complies with the requirements for Conformal Coatings in the Standard for Polymeric Materials – Use in Electrical Equipment Evaluations, UL 746C;

b) The use of any potting material or encapsulation, such as epoxy;

c) The use of silicone rubber at a thickness of at least 1/32 inch (0.79 mm);

d) The use of a case or enclosure that is hermetically sealed against the entrance of an external atmosphere by means of fusion – such as from soldering, brazing, welding, or the fusion of glass to metal.

2.10 POLLUTION DEGREE 2 – Normally, only nonconductive pollution occurs; however, temporary conductivity is expected. Pollution degree 2 is obtainable by reducing possibilities of conductive pollution and reducing possibilities of condensation or high humidity at the creepage distances.

a) Typical constructions that reduce the possibility of conductive pollution are:

1) The use of an un-ventilated enclosure;

2) The use of a filtered ventilated enclosure when the ventilation is fan forced – that is, ventilation is accomplished by one or more blowers within the enclosure that provide a positive intake and exhaust; or

3) The use of an un-filtered ventilated enclosure when the ventilation is not fan forced.

b) Typical constructions that reduce the effects of condensation or high humidity are:

1) The use of a ventilated enclosure;

2) The continuous application of heat through the use of heaters;

3) The application of heat through continuous energization of the equipment, with interruptions such that cooling to the point of condensation does not occur; or

4) The use of any coatings, such as solder masking, on printed wiring board foil traces.

2.11 POLLUTION DEGREE 3 – Conductive pollution occurs, or dry, nonconductive pollution occurs that becomes conductive due to condensation that is expected.

2.11.1 PRIMARY CIRCUIT CONDUCTOR – The conductors connecting the AC input of the converter section to the load side of the branch circuit protective device.

Documents
Document Sharing Hub
Full document details: UL 508C 2018

2.12 RATED VOLTAGE – The nominal rms voltage for which the power conversion equipment is designed to operate.

2.13 REPRESENTATIVE MODEL – A specific model of power conversion equipment, having similar power elements (for example, power semiconductors, fuses, circuit breakers, capacitors, short circuit detection and output inductances) and circuit topologies as other models of power conversion equipment under consideration. The similarities between models allow testing of the specific model to be considered to represent some or all of the required testing of the other models.

2.14 SLASH VOLTAGE RATING – A rating with two rated voltages separated by a slash, for example, 460Y/267 volts or 480Y/277 volts. Equipment with a slash voltage rating is investigated for use in a circuit with these characteristics: the source is solidly grounded, the nominal voltage between any two circuit conductors does not exceed the higher rated voltage, and the nominal voltage between any circuit conductor and the grounded enclosure, grounded parts, and exposed dead metal parts does not exceed the lower rated voltage.

Documents
Document Sharing Hub
Full document details: UL 508C 2018

No Text on This Page

Documents
Document Sharing Hub

Full document details: UL 508C 2018

2.15 SOLID STATE MOTOR OVERLOAD PROTECTION – Circuitry integral to the power conversion equipment that acts to protect a motor under overload conditions by reducing current flow to the motor output terminals. This protection is typically achieved through an algorithm based on the I^2t of the current to the motor. The protection circuitry is usually comprised of hardware, firmware and software components.

2.16 SOLID STATE SHORT CIRCUIT PROTECTION – Circuitry integral to power conversion equipment that acts to suspend current flow to the motor output terminals upon sensing a preset or predetermined condition such as a rapid rate of change in output current or bus voltage. The protection circuitry may be comprised of hardware, firmware and software components.

2.17 STRAIGHT VOLTAGE RATING – A rating with one rated voltage, for example, 460 volts or 480 volts. Equipment with a straight voltage rating is investigated for use in a circuit with these characteristics: the nominal voltage between any two circuit conductors and between any circuit conductor and the grounded enclosure, grounded parts, and exposed dead metal parts does not exceed the rated voltage.

2.18 SURROUNDING AIR TEMPERATURE RATING – A rating assigned to open type equipment that refers to the maximum ambient temperature of air immediately surrounding the equipment inside of the ultimate enclosure.

2.19 THERMAL MEMORY – The ability of an overload protective system to approximate the heating and cooling of a protected motor during operation.

2.20 THERMAL MEMORY RETENTION – The maintaining of the thermal memory upon shutdown or power loss. This includes retention of the last thermal value, and may include an ongoing reduction of this thermal value to reflect the cooling of the motor. This information will be used by the overload protective system to approximate the thermal state of the motor upon restart.

2.21 TRANSIENT SUPPRESSIVE DEVICE – A component or assembly that limits the transient voltage such as an overvoltage protective device, a transformer with isolated windings, or a damping impedance suitably located.

2.22 TRIP CURRENT – Current level above rated output motor current at which the motor overload protection circuitry will function. May be provided as a percent of motor current or as an actual stated current value.

Documents
Document Sharing Hub

Full document details: UL 508C 2018

3 Units of Measurement

3.1 Values stated without parentheses are the requirement. Values in parentheses are explanatory or approximate information.

4 Components

4.1 Except as indicated in 4.2, a component of a product covered by this standard shall comply with the requirements for that component. See Appendix A for a list of standards covering components used in the products covered by this standard.

4.2 A component is not required to comply with a specific requirement that:

a) Involves a feature or characteristic not required in the application of the component in the product covered by this standard, or

b) Is superseded by a requirement in this standard.

4.3 A component shall be used in accordance with its rating established for the intended conditions of use.

4.4 Specific components are incomplete in construction features or restricted in performance capabilities. Such components are intended for use only under limited conditions, such as certain temperatures not exceeding specified limits, and shall be used only under those specific conditions.

5 Undated References

5.1 Any undated reference to a code or standard appearing in the requirements of this standard shall be interpreted as referring to the latest edition of that code or standard.

ENCLOSURE CONSTRUCTION

6 Frames and Enclosure

6.1 General

6.1.1 An enclosure of power conversion equipment shall be constructed and assembled such that it has the strength and rigidity to resist the abuses to which it is subjected, without total or partial collapse resulting in a risk of fire, electric shock, or injury to persons due to reduction of spacings, loosening or displacement of parts, or other serious defects.

6.1.2 An enclosure shall be constructed so as to reduce the risk of unintentional contact with enclosed electrical devices, and to provide internal devices with protection from specified external conditions.

Documents
Document Sharing Hub

Full document details: UL 508C 2018

6.2 Cast metal

6.2.1 A cast-metal enclosure shall be at least 1/8 inch (3.2 mm) thick at every point, more than 1/8 inch thick at reinforcing ribs and door edges, and at least 1/4 inch (6.4 mm) thick at tapped holes for conduit.

Exception: Other than at plain or threaded conduit holes, malleable iron and die-cast or permanent mold cast aluminum, brass, bronze, or zinc shall be:

a) At least 3/32 inch (2.4 mm) thick for an area greater than 24 square inches (155 cm^2) or having any dimension more than 6 inches (152 mm); and

b) At least 1/16 inch (1.6 mm) thick for an area of 24 square inches (155 cm^2) or less having no dimension more than 6 inches (152 mm).

The area under evalutation is capable of being bounded by reinforcing ribs subdividing a larger area.

6.3 Sheet metal

6.3.1 The thickness of a sheet-metal enclosure shall not be less than that specified in Tables 6.1 and 6.2, except that at points to which a wiring system is to be connected, uncoated steel shall be at least 0.032 inch (0.81 mm) thick and nonferrous metal at least 0.045 inch (1.14 mm) thick.

Exception: Enclosure thickness at points other than where a wiring system is to be connected is not required to comply with these requirements when the enclosure complies with the Compression Test and Deflection Test in the Standard for Enclosures for Electrical Equipment, UL 50, as applicable.

Table 6.1
Thickness of sheet metal for enclosures – carbon steel or stainless steel

Without supporting frame[a]				With supporting frame or equivalent reinforcement[a]				Minimum required thickness, uncoated	
Maximum width[b]		Maximum length[c]		Maximum width[b]		Maximum length			
Inches	(cm)	Inches	(cm)	Inches	(cm)	Inches	(cm)	inches	(mm)
4.0	(10.2)	Not limited		6.25	(15.9)	Not limited		0.020[d]	(0.51)
4.75	(12.1)	5.75	(14.6)	6.75	(17.1)	8.25	(21.0)		
6.0	(15.2)	Not limited		9.5	(24.1)	Not limited		0.026[d]	(0.66)
7.0	(17.8)	8.75	(22.2)	10.0	(25.4)	12.5	(31.8)		
8.0	(20.3)	Not limited		12.0	(30.5)	Not limited		0.032	(0.81)
9.0	(22.9)	11.5	(29.2)	13.0	(33.0)	16.0	(40.6)		
12.5	(31.8)	Not limited		19.5	(49.5)	Not limited		0.042	(1.07)
14.0	(35.6)	18.0	(45.7)	21.0	(53.3)	25.0	(63.5)		
18.0	(45.7)	Not limited		27.0	(68.6)	Not limited		0.053	(1.35)
20.0	(50.8)	25.0	(63.5)	29.0	(73.7)	36.0	(91.4)		
22.0	(55.9)	Not limited		33.0	(83.8)	Not limited		0.060	(1.52)
25.0	(63.5)	31.0	(78.7)	35.0	(88.9)	43.0	(109.2)		
25.0	(63.5)	Not limited		39.0	(99.1)	Not limited		0.067	(1.70)
29.0	(73.7)	36.0	(91.4)	41.0	(104.1)	51.0	(129.5)		
33.0	(83.8)	Not limited		51.0	(129.5)	Not limited		0.080	(2.03)
38.0	(96.5)	47.0	(119.4)	54.0	(137.2)	66.0	(167.6)		
42.0	(106.7)	Not limited		64.0	(162.6)	Not limited		0.093	(2.36)
47.0	(119.4)	59.0	(149.9)	68.0	(172.7)	84.0	(213.4)		

Table 6.1 Continued on Next Page

Documents
Document Sharing Hub
Full document details: UL 508C 2018

Table 6.1 Continued

Without supporting frame[a]				With supporting frame or equivalent reinforcement[a]				Minimum required thickness, uncoated	
Maximum width[b]		Maximum length[c]		Maximum width[b]		Maximum length			
Inches	(cm)	Inches	(cm)	Inches	(cm)	Inches	(cm)	inches	(mm)
52.0	(132.1)	Not limited		80.0	(203.2)	Not limited		0.108	(2.74)
60.0	(152.4)	74.0	(188.0)	84.0	(213.4)	103.0	(261.6)		
63.0	(160.0)	Not limited		97.0	(246.4)	Not limited		0.123	(3.12)
73.0	(185.4)	90.0	(228.6)	103.0	(261.6)	127.0	(322.6)		

[a] See 6.3.3.

[b] The width is the smaller dimension of a rectangular piece of sheet metal that is part of an enclosure. Adjacent surfaces of an enclosure are able to have supports in common and be made of a single sheet.

[c] Not limited applies only when the edge of the surface is flanged at least 1/2 inch (12.7 mm) or fastened to adjacent surfaces not normally removed in use.

[d] Sheet steel for an enclosure intended for outdoor use – raintight or rainproof – shall not be less than 0.032 inch (0.81 mm) thick when uncoated.

Table 6.2
Thickness of sheet metal for electrical enclosures – aluminum, copper, or brass

Without supporting frame[a]				With supporting frame or equivalent reinforcement[a]				Minimum required thickness	
Maximum width[b]		Maximum length[c]		Maximum width[b]		Maximum length			
Inches	(cm)	Inches	(cm)	Inches	(cm)	Inches	(cm)	Inches	(mm)
3.0	(7.6)	Not limited		7.0	(17.8)	Not limited		0.023[d]	(0.58)
3.5	(8.9)	4.0	(10.2)	8.5	(21.6)	9.5	(24.1)		
4.0	(10.2)	Not limited		10.0	(25.4)	Not limited		0.029	(0.74)
5.0	(12.7)	6.0	(15.2)	10.5	(26.7)	13.5	(34.3)		
6.0	(15.2)	Not limited		14.0	(35.6)	Not limited		0.036	(0.91)
6.5	(16.5)	8.0	(20.3)	15.0	(38.1)	18.0	(45.7)		
8.0	(20.3)	Not limited		19.0	(48.3)	Not limited		0.045	(1.14)
9.5	(24.1)	11.5	(29.2)	21.0	(53.3)	25.0	(63.5)		
12.0	(30.5)	Not limited		28.0	(71.1)	Not limited		0.058	(1.47)
14.0	(35.6)	16.0	(40.6)	30.0	(76.2)	37.0	(94.0)		
18.0	(45.7)	Not limited		42.0	(106.7)	Not limited		0.075	(1.91)
20.0	(50.8)	25.0	(63.5)	45.0	(114.3)	55.0	(139.7)		
25.0	(63.5)	Not limited		60.0	(152.4)	Not limited		0.095	(2.41)
29.0	(73.7)	36.0	(91.4)	64.0	(162.6)	78.0	(198.1)		
37.0	(94.0)	Not limited		87.0	(221.0)	Not limited		0.122	(3.10)
42.0	(106.7)	53.0	(134.6)	93.0	(236.2)	114.0	(289.6)		
52.0	(132.1)	Not limited		123.0	(312.4)	Not limited		0.153	(3.89)
60.0	(152.4)	74.0	(188.0)	130.0	(330.2)	160.0	(406.4)		

[a] See 6.3.3.

[b] The width is the smaller dimension of a rectangular piece of sheet metal that is part of an enclosure. Adjacent surfaces of an enclosure are able to have supports in common and be made of a single sheet.

[c] Not limited applies only when the edge of the surface is flanged at least 1/2 inch (12.7 mm) or fastened to adjacent surfaces not normally removed in use.

[d] Sheet copper, brass, or aluminum for an enclosure intended for outdoor use – raintight or rainproof – shall not be less than 0.029 inch (0.74 mm) thick.

Documents
Document Sharing Hub
Full document details: UL 508C 2018

6.3.2 Tables 6.1 and 6.2 are based on a uniform deflection of the enclosure surface for any given load concentrated at the center of the surface regardless of metal thickness.

6.3.3 With reference to Tables 6.1 and 6.2, a supporting frame is a structure of angle or channel or folded rigid section of sheet metal that is rigidly attached to and has the same outside dimensions as the enclosure surface and that has torsional rigidity to resist the bending moments that are applied by the enclosure surface when it is deflected. A structure that is as rigid as one built with a frame of angles or channels has equivalent reinforcing. Constructions without supporting frame include:

a) A single sheet with single formed flanges – formed edges;

b) A single sheet that is corrugated or ribbed;

c) An enclosure surface loosely attached to a frame, for example, with spring clips; and

d) An enclosure surface having an unsupported edge.

See Figure 6.1 for supported and unsupported enclosure surfaces.

Documents
Document Sharing Hub

Full document details: UL 508C 2018

Figure 6.1
Determination of required metal thickness from Tables 6.1 and 6.2 for supported and unsupported enclosure surfaces

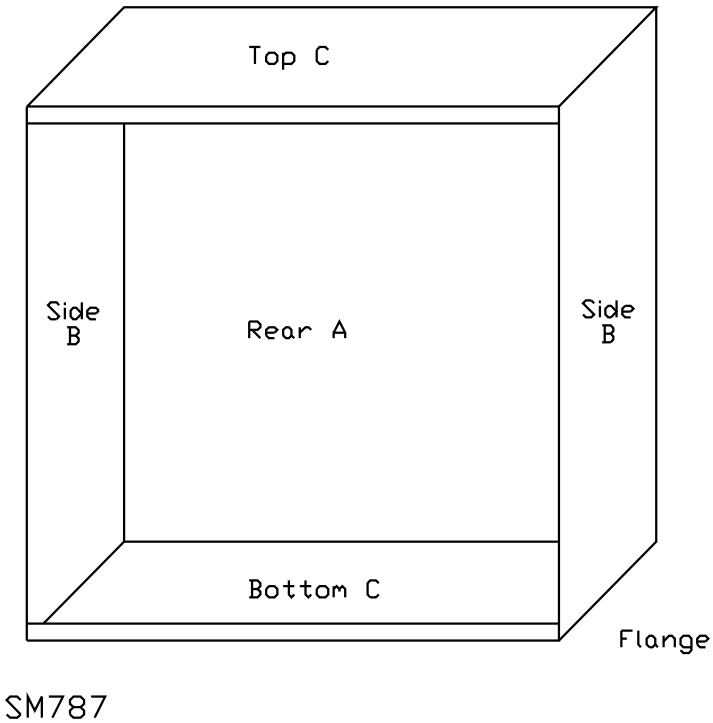

NOTES:

Each enclosure surface is evaluated individually based on the length and width dimensions. For each set of surface dimensions, A, B or C, the width is the smaller dimension regardless of its orientation to other surfaces. In Tables 6.1 and 6.2, there are two sets of dimensions that correspond to a single metal thickness requirement and the following describes the applicable procedure for determining the minimum metal thickness for each surface:

1. For a supported surface, all of the table dimensions, including the ″not limited″ lengths, are able to be applied. The rear surface ″A″, top and bottom surfaces ″C″, are supported either by adjacent surfaces of the enclosure or by a 1/2 inch (12.7 mm) wide flange. To determine required metal thickness for supported surfaces, the width is to be measured and compared with the table value in the maximum width column that is equal to or greater than the measured width. When the corresponding length in the maximum length column is ″Not limited″, the minimum thickness in the far right column is to be used. When the corresponding length in the maximum length column is a numerical value, and the measured length of the side does not exceed this value, the minimum thickness from the far right column is to be used. When the measured length of the side exceeds the numerical value, the next line in the table is to be used.

2. For an unsupported surface, only the table dimensions that include a specific length requirement are applied. The dimensions with a ″not limited″ length do not apply. The front edge of the left and right surfaces ″B″, are not supported by an adjacent surface or by a flange. An edge that is rabbeted , as shown in Figure 6.2, is also evaluated as an unsupported surface. To determine the required metal thickness for unsupported surfaces, the length is to be measured and compared with the table value in the maximum length column that is not less than the measured length, ignoring the ″not limited″ entries. When the corresponding width in the maximum width column is not less than the measured width, the minimum thickness from the far right column is to be used. When the measured width of the surface exceeds the value in the maximum width column, the next line in the table is to be used.

Documents
Document Sharing Hub
Full document details: UL 508C 2018

Figure 6.2
Rabbet

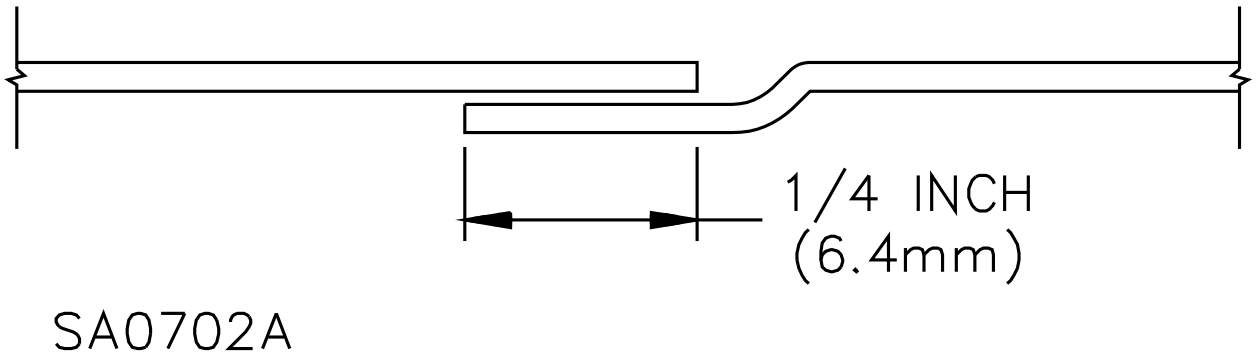

6.4 Doors and covers

6.4.1 A part of an enclosure, such as a door or a cover, shall be provided with a means – such as latches, locks, interlocks, or screws – for firmly securing it in place.

Exception: A snap-on cover that complies with Securement of Snap-On Cover Test, Section 11, is not required to have additional securing means.

6.4.2 An enclosure cover shall be hinged when it gives access to a fuse or any other overload-protective device that requires renewal, or when it is required to be opened for normal operation of the device.

Exception: A hinged cover is not required for an enclosure:

a) To which access is required only in the event of burnout of an overload relay current element or similar components on short circuit;

b) In which the only fuse enclosed is a control-circuit fuse, when the fuse and control-circuit load – other than a fixed control-circuit load, such as a pilot lamp – are within the same enclosure;

c) In which a means is provided for resetting all overload-protective devices from outside the enclosure, or kits are available to provide a means for resetting all overload-protective devices from outside the enclosure and a marking is provided in accordance with Instructions and Markings Pertaining to Accessories, Section 68; or

Documents
Document Sharing Hub
Full document details: UL 508C 2018

d) The cover is interlocked such that the equipment is inoperable with the cover removed and the cover is marked as noted in 67.16.

6.4.3 Other than as noted in 6.4.4, a hinged cover provided in accordance with the requirement in 6.4.2 shall be provided with a snap latch or a captive multiturn or partial-turn fastener. Such securing means shall be located or used in multiple so as to hold the cover closed over its entire length. A captive fastener shall be operable by hand or by a simple hand tool such as a screwdriver.

6.4.4 A door more than 48 inches (1.2 m) long on the hinged side shall be provided with one of the following:

a) A multipoint latch operated by a single knob or handle;

b) Two or more snap latches or captive fasteners; or

c) One knob-operated latch and one snap latch or captive fastener.

6.4.5 Noncaptive fasteners are not prohibited for use on hinged cover enclosures that are not required to comply with 6.4.2.

6.4.6 A door giving access to a fuse or any portion of a circuit breaker other than the operating handle shall shut closely against a 1/4-inch (6.4-mm) rabbet as illustrated in Figure 6.2 or the equivalent.

6.4.7 A cover giving access to a fuse or any portion of a circuit breaker other than the operating handle shall have flanges for the full length of the four edges. Flanges on a cover shall fit closely with the outside walls of the enclosure, and shall comply with Figure 6.3 and Table 6.3. A combination of flange and rabbet is usable.

Exception: The flange width is not required to be as specified when the construction complies with the Deflection Test in the Standard for Enclosures for Electrical Equipment, UL 50.

Documents
Document Sharing Hub

Full document details: UL 508C 2018

Figure 6.3
Flanged cover constructions[a]

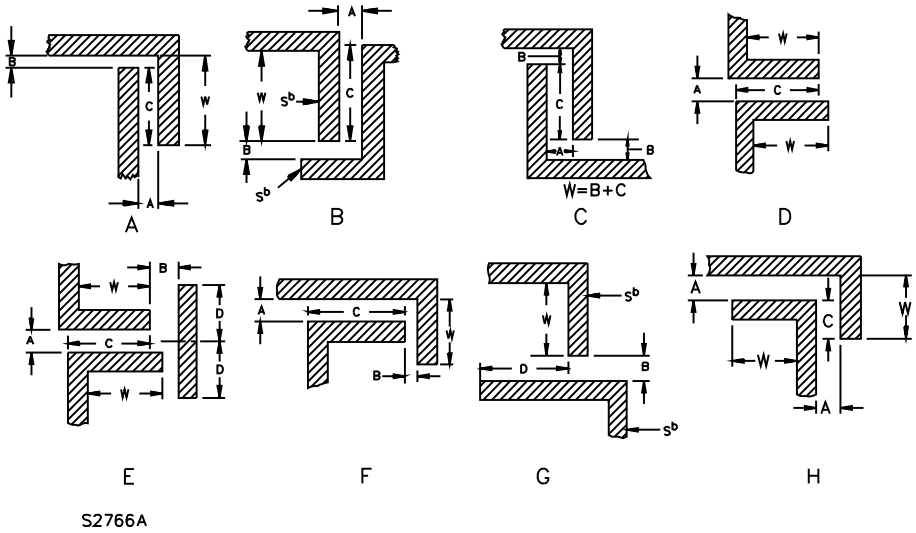

[a] See Table 6.3 for dimensions for sketches A – H.

[b] The surfaces "S" are able to be in line with one another – not as shown.

Table 6.3
Dimensions for flanged cover constructions

Sketch – see Figure 6.3	Dimensions									
	W Minimum flange width[a]		A Maximum space between parts		B Maximum gap		C Minimum overlap		D Minimum barrier extension	
	Inch	(mm)	Inch	(mm)	Inch	(mm)	Inch	(mm)	Inch	(mm)
A	1/2	12.7	1/8	3.2	1/8	3.2	7/16	11.1	–	–
A	3/4	19.1	3/16	4.8	3/16	4.8	5/8	15.9	–	–
A	1	25.4	1/4	6.4	1/4	6.4	7/8	22.2	–	–
B	1/2	12.7	1/8	3.2	1/8	3.2	7/16	11.1	–	–
B	3/4	19.1	3/16	4.8	3/16	4.8	5/8	15.9	–	–
B	1	25.4	1/4	6.4	1/4	6.4	7/8	22.2	–	–
C	1/2	12.7	3/16	4.8	3/16	4.8	1/4	6.4	–	–
C	3/4	19.1	1/4	6.4	1/4	6.4	7/16	11.1	–	–
D	1/2	12.7	3/32	2.4	–	–	7/16	11.1	–	–
E	1/2	12.7	1/8	3.2	1/8	3.2	7/16	11.1	1/4	6.4
F	1/2	12.7	1/8	3.2	1/4	6.4	7/16	11.1	–	–
G[b]	1/2	12.7	–	–	1/32	0.8	–	–	1/2	12.7
H	1/4	6.4	1/8	3.2	–	–	3/16	4.8	–	–

[a] Tolerance: minus 1/16 inch (1.6 mm).
[b] Equipment within the enclosure must be located on the side of the barrier extension D that is opposite the gap B.

Documents
Document Sharing Hub
Full document details: UL 508C 2018

6.4.8 To determine whether a flanged cover complies with the requirement in 6.4.7 regarding width of flange, the distance between the flat portion of the cover – clear of forming radii, beads, draws, and similar features – and a straight edge placed anywhere across any two flanges at any points is to be measured.

6.4.9 Figure 6.4 illustrates the method of determining the amount of overlap between a flat cover and a flanged box wall and the amount of overlap at a corner or box seam. When the radius of the flange bend is small, the flange width and overlap are designated W_1 or W_2, based upon the actual construction, and shall be at least 1/2 inch (12.7 mm). When the radius of the flange bend is excessive or when the flat sheet is on the inside of the flange, the overlap, W_3 or W_4, is to be measured over only that portion where the two pieces of metal are actually in contact with each other, and shall be at least 1/2 inch (12.7 mm).

Figure 6.4
Overlap between flat cover and box flange and at corner or box seam

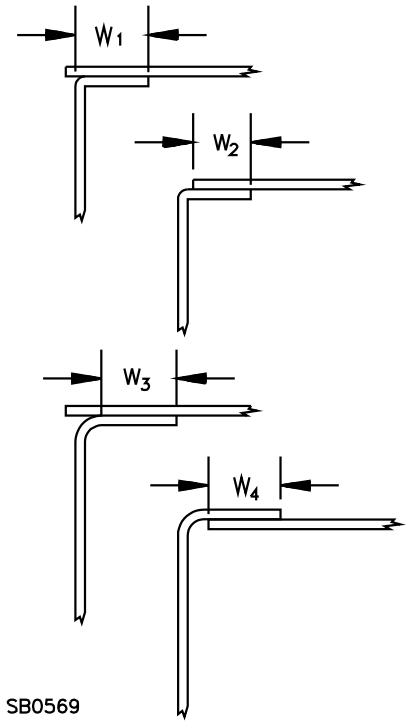

6.4.10 To determine the overlap of a telescoping cover, the enclosure is to be placed on its back on a bench, with the cover in its normally closed position, and a mark is to be scribed on all walls of the box along the edge of the flange. The overlap is the measured distance between the scribe marks and the edges of the box walls, noted as W_4 in Figure 6.4. In scribing the marks, the cover is to be held in a fixed position with firmness so as to prevent displacement of the cover by the scribing tool, and without bending or distorting any portion of the box, cover, or other part of the enclosure.

Documents
Document Sharing Hub
Full document details: UL 508C 2018

6.4.11 A flat strip used to provide a rabbet, or an angle strip fastened to the edges of a door giving access to a fuse or any portion of a circuit breaker, other than the operating handle, shall be at least 60 percent of the required thickness of the metal of the box proper, and not less than 0.042 inch (1.07 mm) when of uncoated steel, and not less than 0.058 inch (1.47 mm) thick when of nonferrous metal. It shall be secured at no fewer than two points. There shall not be more than 1-1/2 inches (38 mm) between an end of the strip and a point at which it is secured, and the distance between adjacent points at which the strip is secured shall not be more than 6 inches (152 mm).

6.4.12 A construction involving a gasket that provides the intended tight fit, as verified by the environmental rating related performance tests in Section 9, General, is not required to comply with the rabbeting, flanging, or overlapping requirements in 6.4.6 – 6.4.11.

6.5 Polymeric

6.5.1 A polymeric electrical enclosure or a polymeric part of an electrical enclosure shall comply with the Polymeric Enclosures/Parts requirements in the Standard for Enclosures for Electrical Equipment, UL 50, and also with the additional requirements specified in this standard. See Section 9, General, for enclosure performance requirements. With respect to the criteria of Flammability – 127 mm (5 Inch) Flame Test of the Standard for Polymeric Materials – Use in Electrical Equipment Evaluations, UL 746C, referenced by the Polymeric Enclosures/Parts requirements in UL 50, only criteria (a) and (b) must be met following the application of the Flammability – 127 mm (5 inch) Flame Test to enclosures incorporating openings, such as ventilation openings:

a) The material shall not continue to burn for more than 1 minute after the fifth 5-second application of the test flame, with an interval of 5 seconds between applications of the flame.

b) Flaming drops or flaming or glowing particles that ignite surgical cotton 305 mm (12 inch) below the test specimen shall not be emitted by the test sample at any time during the test.

See 6.5.2 for criteria for enclosures with no openings.

6.5.2 Application of the Flammability – 127 mm (5 inch) Flame Test to enclosures with no openings must meet criteria (a), (b), and (c):

a) The material shall not continue to burn for more than 1 minute after the fifth 5-second application of the test flame, with an interval of 5 seconds between applications of the flame.

b) Flaming drops or flaming or glowing particles that ignite surgical cotton 305 mm (12 inch) below the test specimen shall not be emitted by the test sample at any time during the test.

c) Not have any area exhibit burn-through.

6.5.3 A polymeric enclosure intended for connection to a rigid conduit system shall comply with Polymeric Enclosure Rigid Metallic Conduit Connection Tests in the Standard for Enclosures for Electrical Equipment, UL 50.

Documents
Document Sharing Hub
Full document details: UL 508C 2018

6.6 Bonding

6.6.1 An enclosure made of insulating material, either wholly or in part, shall have bonding means to provide continuity of grounding between all conduit openings. The bonding means shall be either completely assembled on the product or provided as separate parts for field installation. See 67.12.

Exception No. 1: A bonding means is not required for the enclosure of a pushbutton station or a selector switch that is intended to be connected to a single conduit.

Exception No. 2: A bonding means is not required to be provided with each enclosure when such means is available in the form of a kit from the manufacturer and the equipment complies with the marking requirements in 68.1.

6.6.2 The continuity of a conduit system shall be provided by metal-to-metal contact not relying on a polymeric material.

Exception: The continuity of the grounding system is not prohibited from relying on the integrity of the polymeric enclosure when samples have been subjected to the creep test requirements in the Standard for Polymeric Materials – Use in Electrical Equipment Evaluations, UL 746C. Overcurrent Tests shall be conducted at 200 percent of the rated current of the branch circuit-protective device.

6.6.3 A separate bonding conductor whether in a plastic or metal enclosure shall be copper, a copper alloy, or other material determined to be usable as an electrical conductor. Ferrous metal parts in the grounding path shall be protected against corrosion by enameling, galvanizing, plating, or other equivalent means. A separate bonding conductor shall:

a) Be protected from mechanical damage or be located within the confines of the outer enclosure or frame; and

b) Not be secured by a removable fastener used for any purpose other than bonding unless the bonding conductor is unable to be omitted after removal and replacement of the fastener.

6.6.4 The size of a separate component bonding conductor shall not be less than the applicable size specified in Table 6.4 or the size of the conductor supplying the component, whichever is smaller.

Exception: A bonding conductor is not required to be as large as the specified size when:

a) It does not open when carrying, for the time specified in Table 6.5, a current equal to twice the branch-circuit overcurrent-device rating – see 6.6.5 – and not less than 40 amperes; and

b) None of three samples of the bonding conductor opens during a limited-short-circuit test with a current as specified in Table 6.6 when in series with a fuse as described in 6.6.5.

Documents
Document Sharing Hub
Full document details: UL 508C 2018

Table 6.4
Size of bonding conductor

Maximum rating or setting of automatic overcurrent device in circuit ahead of equipment, amperes	Minimum size of bonding conductor[a]			
	Copper wire AWG (mm^2)		Aluminum wire AWG or kcmil (mm^2)	
15	14	(2.1)	12	(3.3)
20	12	(3.3)	10	(5.3)
30	10	(5.3)	8	(8.4)
40	10	(5.3)	8	(8.4)
60	10	(5.3)	8	(8.4)
100	8	(8.4)	6	(13.3)
200	6	(13.3)	4	(21.2)
300	4	(21.2)	2	(33.6)
400	3	(26.7)	1	(42.4)
500	2	(33.6)	1/0	(53.5)
600	1	(42.4)	2/0	(67.4)
800	1/0	(53.5)	3/0	(85.0)
1000	2/0	(67.4)	4/0	(107.0)
1200	3/0	(85.0)	250	(127.0)

[a] Or equivalent cross-sectional area.

Table 6.5
Duration of current flow for bonding-conductor test

Overcurrent device rating, amperes	Minimum duration of current flow, minutes
30 or less	1
31 – 60	4
61 – 100	6

Table 6.6
Bonding conductor short-circuit test capacity

Controller rating			Circuit capacity amperes
Horsepower	(kW Output)	Volts	
1/2	(0.373)	0 – 250	200
1/2	(0.373)	251 – 600	1,000
over 1/2 to 1	(0.374 – 0.746)	0 – 600	1,000
1 to 3	(0.747– 2.24)	0 – 250	2,000
over 3 to 7-1/2	(2.25 – 5.59)	0 – 250	3,500
over 7-1/2 to 10	(5.60 – 7.46)	0 – 250	5,000
over 10 to 50	(7.47– 37.3)	251 – 600	5,000
over 50 to 200	(37.4 – 149)	0 – 600	10,000
over 200	(over 150)	0 – 600	a

[a] See Table 45.1.

6.6.5 The circuit for the test required by the Exception to 6.6.4 is to have a power factor of 0.9 – 1.0 and is to be limited to the current specified in Table 6.6. The open-circuit voltage of the test circuit is to be 100 to 105 percent of the specified voltage. The circuit is to be connected through a nonrenewable fuse that

Documents
Document Sharing Hub
Full document details: UL 508C 2018

conducts twice its rated current for at least 12 seconds. The fuse rating is to be that of the branch-circuit overcurrent device to which the equipment is intended to be connected and not less than 20 amperes. One test is to be performed on each of three samples of the bonding conductor.

6.7 Resistance measurement

6.7.1 The resistance between two parts connected by a bonding conductor shall not be more than 0.1 ohm. The resistance is to be determined by a resistance measuring instrument, except that when unacceptable results are recorded, an alternating or direct current of at least 20 amperes from a power supply of not more than 12 volts is to be passed from the point of connection of the equipment grounding means to the metal part in the grounding circuit. The resulting drop in potential and the test current are to be measured between the two points. The resistance in ohms is to be determined by dividing the drop in potential in volts by the current in amperes.

6.8 Openings in enclosure

6.8.1 A 0.500 inch (12.70 mm) diameter rod shall not be able to enter an opening not used for ventilation. All such openings shall comply with the requirements in 6.9, Accessibility of live parts.

6.8.2 No covering is required across the bottom of a Type 1, 2, 3R, or 3RX enclosure of a floor-mounted controller when the enclosure is within 6 inches (152 mm) of the floor or less and when live parts within the device are at least 6 inches above the highest portion of the lower edge of the enclosure.

6.9 Accessibility of live parts

6.9.1 To reduce the risk of unintentional contact that may involve a risk of electric shock or injury, the probe illustrated in Figure 6.5 shall not contact an uninsulated live part or wire, electrical energy – high current levels, or moving parts when inserted through any opening in an enclosure.

Exception: As an alternative to 6.9.1, the probe illustrated in Figure 6.6 may be used to determine accessibility.

Documents
Document Sharing Hub

Full document details: UL 508C 2018

Figure 6.5
Articulate probe with web stop

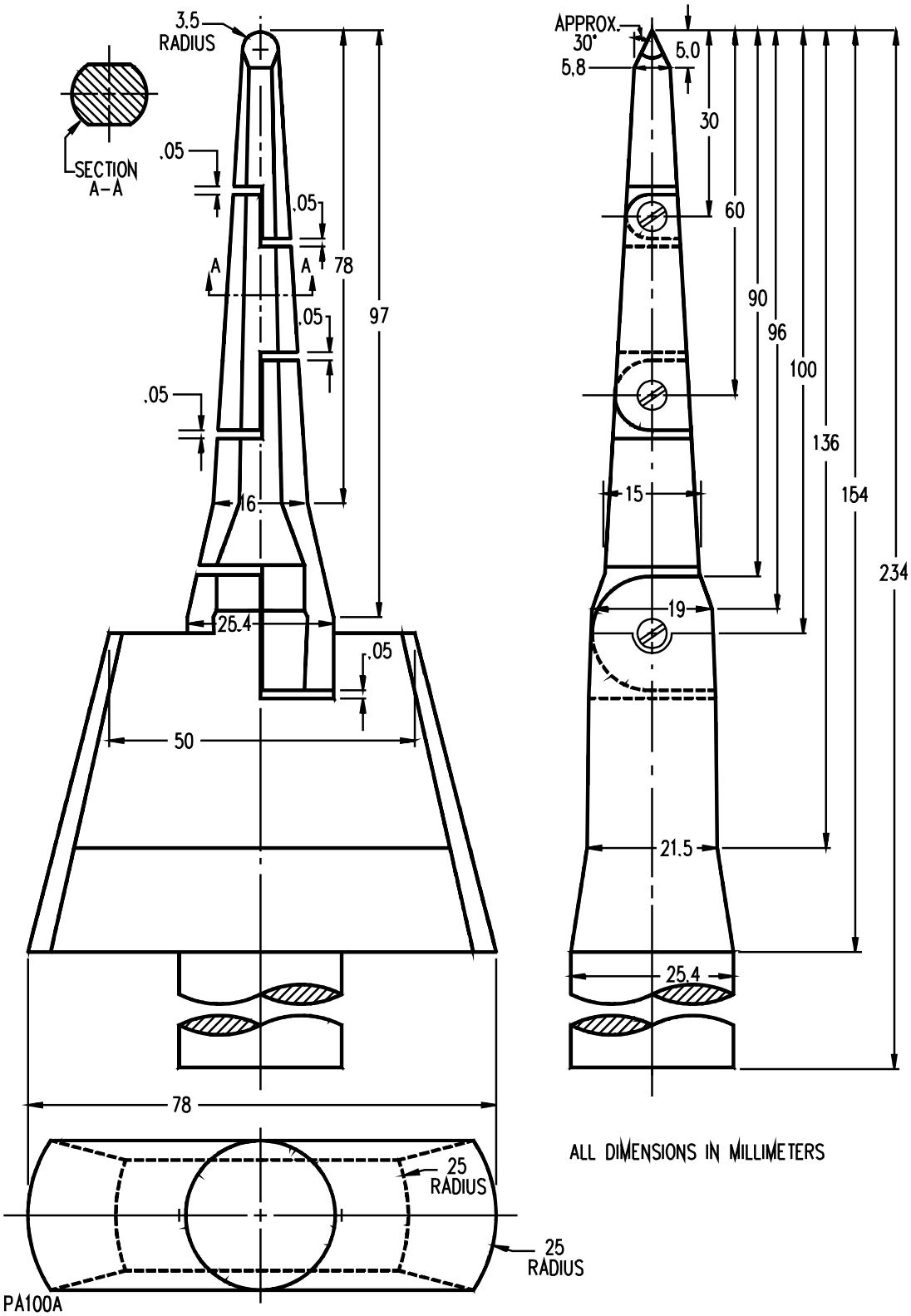

Documents
Document Sharing Hub
Full document details: UL 508C 2018

Figure 6.6
IEC articulate probe

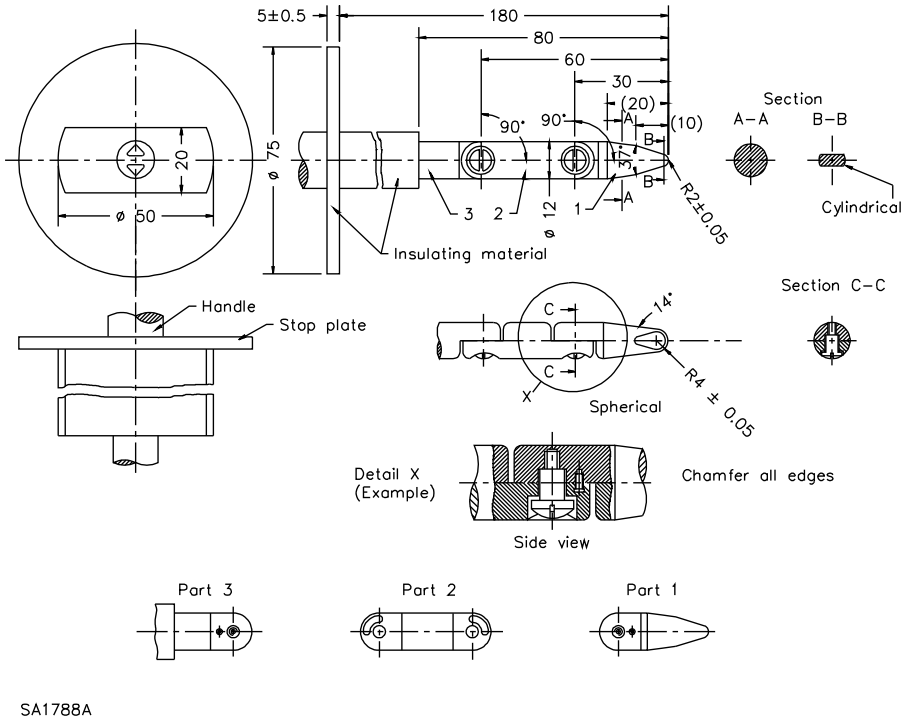

6.9.2 The probe specified in 6.9.1 shall be applied in any possible configuration; and, if necessary, the configuration shall be changed after insertion through the opening.

6.9.3 The probe specified in 6.9.1 is to be applied with a force not to exceed 2.2 pounds (10 N). The probe is to be used to determine the accessibility provided by an opening, and not as an instrument to determine the strength of a material.

6.9.4 The probe specified in 6.9.1 is to be inserted as described in 6.9.2 into all openings, including those in the bottom of the unit. The unit is to be moved in whatever way necessary to make the entire bottom accessible for insertion of the probe.

Exception: For a floor-standing unit, the probe is to be inserted into all openings in the bottom that are accessible without tipping, turning over, or otherwise moving the unit from its intended installed position.

Documents
Document Sharing Hub
Full document details: UL 508C 2018

6.10 Ventilating openings

6.10.1 A ventilating opening is able to be provided in an enclosure that contains a resistance-type starter, autotransformer-type starter, or other equipment when the conditions of use necessitate such ventilation and it is shown by test that electrical disturbances within the enclosure are contained or when the ventilation opening complies with 6.10.2 – 6.11.2.

6.10.2 A ventilating opening in the top of a Type 1 enclosure shall be covered by a hood or protective shield spaced above the opening when there are uninsulated live components below the opening. The ventilation opening shall also be in accordance with 6.10.3.

6.10.3 A rod having a diameter of 0.500 inch (12.7 mm) shall not be able to enter any ventilating opening in a Type 1, 2, or 3R enclosure.

Exception: A rod having a diamter of 0.750 inch (19.05 mm) is usable for evaluating and opening when the distance between any uninsulated live part and the opening is more than 4 inches (102 mm).

6.10.4 The diameter of the wires of a screen shall be at least 0.051 inch (1.30 mm) when the screen openings are 0.500 square inch (32.3 mm^2) or less in area, and shall be at least 0.081 inch (2.06 mm) for larger screen openings.

6.10.5 Perforated sheet steel and sheet steel employed for expanded-metal mesh shall be at least 0.042 inch (1.07 mm) thick for mesh openings or perforations 0.500 square inch (3.2 cm^2) or less in area, and shall be at least 0.080 inch (2.03 mm) thick for larger openings.

Exception: In a small device where the indentation of a guard or enclosure does not alter the clearance between uninsulated, movable, live parts and grounded metal so as to adversely affect the performance or reduce the spacings below the minimum value specified in Table 36.1, expanded-metal mesh of uncoated steel not less than 0.020 inch (0.51 mm) thick is usable when:

a) The exposed mesh on any one side or surface of the device so protected has an area not more than 72 square inches (464 cm^2) and has no dimension greater than 12 inches (304.8 mm); or

b) The width of the opening so protected is not greater than 3.50 inches (88.9 mm).

Documents
Document Sharing Hub
Full document details: UL 508C 2018

6.11 Forced ventilation

6.11.1 When ventilation is fan forced – that is, ventilation is accomplished by one or more blowers within the enclosure that provide a positive intake and exhaust – the ventilation openings shall comply with the requirements in 6.11.2.

6.11.2 When operator controls are provided on the enclosure, the air outlet shall not direct unrestricted exhaust air at the area occupied by the operator of the equipment.

6.11.3 The area occupied by the operator shall be 30 inches (762 mm) wide (horizontal) centered on any operator control, display, or disconnect handle over the entire (vertical) height of the enclosure for wall mounted equipment or up to 6-1/2 feet (1.98 m) above the floor for floor mounted equipment.

6.12 Observation windows

6.12.1 Glass covering an observation opening and forming a part of the enclosure shall be reliably secured in such a manner that it is not readily displaced in service and shall provide mechanical protection of the enclosed parts. Glass for an opening not more than 4 inches (102 mm) in any dimension shall not be less than 0.055 inch (1.40 mm) thick; and glass for an opening having no dimension greater than 12 inches (305 mm) shall not be less than 0.115 inch (2.92 mm) thick. Glass used to cover a larger opening shall have the required mechanical strength and shall otherwise be usable for the purpose.

6.13 Wire bending space

6.13.1 The space between the end of the soldering lug or pressure wire connector for the connection of field-installed wire and the wall of the enclosure toward which the wire is directed upon leaving the lug or connector shall be at least that specified in Table 6.7.

Table 6.7
Wire bending space at the terminals of enclosed power conversion equipment

Size of wire[a] AWG or kcmil (mm^2)		Minimum bending space, Terminal to wall, inches (mm)					
		Wires per terminal					
		1		2		3	
14 – 10	(2.1 – 5.3)		–		–		–
8 – 6	(8.4 – 13.3)	1-1/2	(38)		–		–
4 – 3	(21.2 – 26.7)	2	(51)		–		–
2	(33.6)	2-1/2	(64)		–		–
1	(42.4)	3	(76)		–		–
1/0	(53.5)	5	(127)	5	(127)	7	(178)
2/0	(67.4)	6	(152)	6	(152)	7-1/2	(191)
3/0	(85.0)	7	(178)	7	(178)	8	(203)
4/0	(107.2)	7	(178)	7	(178)	8-1/2	(216)
250	(127)	8	(203)	8	(203)	9	(229)
300	(152)	10	(254)	10	(254)	11	(279)
350	(177)	12	(305)	12	(305)	13	(330)
400	(203)	12	(305)	12	(305)	14	(356)
500	(253)	12	(305)	12	(305)	15	(381)
600	(304)	14	(356)	16	(406)	18	(457)
700	(355)	14	(356)	16	(406)	20	(508)
750 – 800	(380 – 405)	18	(457)	19	(483)	22	(559)

Table 6.7 Continued on Next Page

Documents
Document Sharing Hub
Full document details: UL 508C 2018

Table 6.7 Continued

Size of wire[a] AWG or kcmil (mm^2)		Minimum bending space, Terminal to wall, inches (mm)					
		Wires per terminal					
		1		2		3	
900	(456)	18	(457)	19	(483)	24	(610)

NOTE – Where provision for more than three conductors per terminals is provided, the bending space shall be in accordance with the appropriate tables for cabinets and boxes in Article 312 of the National Electrical Code, ANSI/NFPA 70.

[a] The wire size is to be based on 27.5.1(b).

6.13.2 The space specified in 6.13.1 is to be the length of a straight line extending from the end of the soldering lug or pressure wire connector where the wire is connected toward and perpendicular to the enclosure wall toward which the wire is initially directed.

6.13.3 When a wire is restricted by barriers or other means from being bent where it leaves the connector, the distance required by 6.13.1 and Table 6.7 is to be measured from the end of the barrier. A terminal lug or connector that is not prevented from turning as described in the Exception to 19.2 is to be repositioned anywhere within the limits to obtain the shortest distance for measurement.

6.13.4 The wire size used to determine the wire bending space is based on 125 percent of the motor full-load current rating. See Table 42.1 or 42.2 for the full-load current rating of horsepower rated motors.

ENVIRONMENTAL RATING RELATED ENCLOSURE CONSTRUCTION

7 General

7.1 An enclosure shall comply with the Environmental Related Constructional Features for Enclosure Types Table of the Standard for Enclosures for Electrical Equipment, UL 50, as they apply to the type number or numbers with which the enclosure is marked.

8 Protection Against Corrosion

8.1 An enclosure shall comply with the corrosion protection requirements in the Enclosures Types Table of the Standard for Enclosures for Electrical Equipment, UL 50, as they apply to the type number or numbers with which the enclosure is marked.

Documents
Document Sharing Hub
Full document details: UL 508C 2018

ENVIRONMENTAL RATING RELATED ENCLOSURE PERFORMANCE

9 General

9.1 An enclosure shall comply with the environmental rating related performance requirements in the Enclosure Types Table of the Standard for Enclosures for Electrical Equipment, UL 50, as they apply to the type number or numbers with which the enclosure is marked.

Exception: A Type 4X enclosure intended for indoor use only and marked in accordance with 13.2:

a) Is not required to be subjected to the Icing Test, in UL 50; and

b) For a polymeric enclosure, is not required to have a material which is resistant to ultraviolet light weathering in accordance with UL 50.

9.2 A Type 12 enclosure employing filtered ventilation openings shall be subjected to either the Dust Test or the Atomized Water Test in the Standard for Enclosures for Electrical Equipment, UL 50.

9.3 Equipment marked Type 12, 4, or 4X are able to employ a Type 12, 4, or 4X rated primary enclosure, enclosing both uninsulated and insulated live parts, with insulated live parts external to the primary enclosure or portions of insulated live parts projecting though the wall of the primary enclosure. In all cases, the primary enclosure must satisfy all requirements referenced in the Standard for Enclosures for Electrical Equipment, UL 50, for a Type 12, 4, or 4X enclosure.

9.4 The enclosure enclosing insulated live parts or portions of insulated live parts which extend through a Type 12, 4, or 4X primary enclosure must comply with all requirements for a Type 1 enclosure.

9.5 Power conversion equipment employing a Type 12 construction as noted in 9.3 and 9.4 must be submitted to the Indoor Circulating Airborne Dust Test or the Atomized Water Test – Method A and the Drip Test as referenced in the Standard for Enclosures for Electrical Equipment, UL 50. Where provided, these tests must be conducted separately on equipment employing cooling fans with the fans energized and unenergized.

9.6 Power conversion equipment employing a Type 4 or 4X construction as noted in 9.3 and 9.4 must be submitted to the Hosedown Test as referenced in the Standard for Enclosures for Electrical Equipment, UL 50. Where provided, these tests must be conducted separately on equipment employing cooling fans with the fans energized and unenergized.

9.7 Insulated live parts or portions of insulated live parts which extend through a primary Type 12 enclosure must be protected from dripping non-corrosive liquids and circulating dust by either of the following methods:

a) If protection from dripping non-corrosive liquids is provided by electrical insulation integral to the insulated live part, the insulation material must meet the requirements for Flame Rating, RTI, HWI, HAI and CTI as described in Insulating Material, Section 17, and additionally the requirements for both Volume Resistivity and Dielectric Strength, as described in the Standard for Polymeric Materials – Use in Electrical Equipment Evaluations, UL 746C, following conditioning in water per Water Exposure and Immersion of UL 746C.

Documents
Document Sharing Hub
Full document details: UL 508C 2018

b) If protection from dripping liquids is provided by mechanical means such as a cavity, channel, hood, or guard, the construction must inhibit contact with dripping liquids when the assembly including primary enclosure is subjected to the Drip Test of the Standard for Enclosures for Electrical Equipment, UL 50 with the enclosure mounted in all orientations allowed.

c) Protection from circulating dust must be verified by either the Dust Test or the Atomized Water Test of UL 50. At the conclusion of either the Dust Test or Atomized Water Test, no contaminants (cement particles or water droplets) are allowed to be in contact with uninsulated live parts. Water droplets or cement particles are allowed to contact insulating material. Verification of contaminant ingress is to be accomplished by disassembly and visual inspection immediately following the conclusion of the test.

Exception: At the conclusion of either the Dust or Atomized Water Test in (c), contaminants are allowed in contact with uninsulated live parts in limited voltage/current circuits, Section 32.3, that might be exposed in places such as the windings of a cooling fan supplied by a limited voltage/current source.

9.8 Insulated live parts or portions of insulated live parts which extend through a primary Type 4 or 4X enclosure must be protected from rain, splashing water, and hose-directed water by either of the following methods:

a) If protection from rain, splashing water, and hose-directed water is provided by electrical insulation integral to the insulated live part, the insulation material must meet the requirements for Flame Rating, RTI, HWI, HAI and CTI as described in Insulating Material, Section 17, and additionally the requirements for both Volume Resistivity and Dielectric Strength, as described in the Standard for Polymeric Materials – Use in Electrical Equipment Evaluations, UL 746C, following conditioning in water per Water Exposure and Immersion, of UL 746C.

b) If protection from rain, splashing water, and hose-directed water is provided by mechanical means such as a cavity, channel, hood, or guard, the construction must inhibit contact with rain, splashing water, and hose-directed water when the assembly including primary enclosure is subjected to the Hosedown Test of the Standard for Enclosures for Electrical Equipment, UL 50 with the enclosure mounted in all orientations allowed.

Documents
Document Sharing Hub

Full document details: UL 508C 2018

NON-ENVIRONMENTAL RATING RELATED ENCLOSURE PERFORMANCE

10 General

10.1 An enclosure shall comply with non-environmental rating related performance requirements in this standard and in the Standard for Enclosures for Electrical Equipment, UL 50.

11 Securement of Snap-On Cover Test

11.1 A snap-on cover providing part of the overall enclosure that gives access to uninsulated live parts and does not have a separate tool-operated fastener shall have no apparent means for removal such as an extending tab, and is to comply with the following:

a) A cover that is able to be disengaged from the enclosure by a squeezing force applied with one hand shall not be released when a squeezing force of 14 pounds (62 N) or less is applied at any two locations not more than 5 inches (127 mm) apart. The distance is to be measured by a tape stretched tightly over that portion of the surface of the cover that is encompassed by the palm of the hand.

b) A cover shall not disengage from the enclosure when a direct pull force of 14 pounds (62 N) is applied by gripping the cover at any two convenient locations; and

c) A cover shall not be disengaged from the enclosure by an impact force of 1 foot-pound (1.4 J) applied to the accessible faces of the cover – one blow per face. The impact is to be applied by a steel ball having a diameter of not less than 2 inches (51 mm).

11.2 The tests described in 11.1 (a) and (b) are to be conducted in the as-received condition and after the cover has been removed and replaced ten times.

INSTRUCTIONS AND MARKINGS PERTAINING TO ENCLOSURES

12 Permanence of Marking

12.1 Any marking that is required to be permanent shall be molded, die-stamped, paint-stenciled, stamped or etched metal that is permanently secured, or indelibly stamped lettering on a pressure-sensitive label secured by adhesive. Usage, handling, storage, and similar conditions to which the product is exposed are to be evaluated in the determination of the permanency of a marking.

Documents
Document Sharing Hub
Full document details: UL 508C 2018

13 Details

13.1 An enclosure shall be marked with its environmental type rating number and shall comply with the environmental rating related marking requirements in the Environmental Related Constructional Features for Enclosure Types Table of the Standard for Enclosures for Electrical Equipment, UL 50, as they apply to the type number or numbers with which the enclosure is marked.

13.2 With reference to 9.1, a Type 4X enclosure intended for indoor use only shall be marked ″Type 4X Indoor Use Only ″ in letters that are legible and of the same font and height.

DEVICE CONSTRUCTION

14 General

14.1 Power conversion equipment shall:

a) Be constructed so that it complies with the rules for installation and use of such equipment as given in the National Electrical Code, ANSI/NFPA 70; and

b) Employ materials that are evaluated for the use.

15 Protection Against Corrosion

15.1 Iron and steel parts shall comply with the requirements in 8.1.

16 Provisions for Mounting

16.1 Provisions shall be made for securely mounting power conversion equipment to a supporting surface. A bolt, screw, or other part used to mount a component of the equipment shall not be used for securing the equipment to the supporting surface.

16.2 When the temperature on the back of equipment exceeds 90°C (194°F) per Table 40.2, when operated under normal conditions, the construction shall be such that only the points of support are in contact with a plane mounting surface with the remainder of the equipment spaced at least 1/4 inch (6.4 mm) from the mounting surface. In addition, the mounting surface shall not attain a temperature higher than 90°C during the temperature test.

Documents
Document Sharing Hub

Full document details: UL 508C 2018

17 Insulating Material

17.1 A material that is used for the direct support of an uninsulated live part shall comply with the Relative Thermal Index (RTI), Hot Wire Ignition (HWI), High-Current Arc Resistance to Ignition (HAI), and Comparative Tracking Index (CTI) values indicated in Table 17.1. A material is in direct support of an uninsulated live part when:

a) It is in direct physical contact with the uninsulated live part; and

b) It serves to physically support or maintain the relative position of the uninsulated live part.

Exception No. 1: No additional evaluation is required for the direct support of uninsulated live parts when the generic materials used comply with Table 17.2.

Exception No. 2: Materials without HWI Performance Level Category (PLC) values or with HWI PLC values higher (worse) than those required by Table 17.1 must comply with the end-product Abnormal Overload Test in accordance with the Standard for Polymeric Materials – Use in Electrical Equipment Evaluations, UL 746C.

Exception No. 3: Materials without HAI Performance Level Category PLC values or with HAI PLC values higher (worse) than those required by Table 17.1 must comply with the end-product Arc Resistance Test in accordance with the Standard for Polymeric Materials – Use in Electrical Equipment Evaluations, UL 746C.

Exception No. 4: Materials used in devices that do not incorporate contacts are not required to comply with the HAI Performance Level Category PLC requirements.

Exception No. 5: Materials that are used in devices that incorporate contacts and are not used within 1/2 inch (12.7 mm) of the contacts are not required to comply with the HAI Performance Level Category PLC requirements.

Exception No. 6: Materials without CTI Performance Level Category PLC values or with CTI PLC values higher (worse) than the CTI required by Table 17.1 must comply with the end-product Arc Resistance Test in accordance with the Standard for Polymeric Materials – Use in Electrical Equipment Evaluations, UL 746C.

Exception No. 7: Materials without CTI Performance Level Category PLC values or with CTI PLC values higher (worse) than the CTI required by Table 17.1 comply with the intent of CTI PLC requirement when:

a) They have a High-Voltage-Arc Tracking (HVTR) PLC value of 1 or lower (better); or

b) The over surface spacings between the uninsulated live parts is 1/2 inch (12.7 mm) minimum.

Documents
Document Sharing Hub
Full document details: UL 508C 2018

Table 17.1
Minimum material characteristics for the direct support of uninsulated live parts

UL 94 Flame Class	RTI Elec	HWI[b]	HAI[b]	CTI[c,d,e]
HB	a	2	1	3
V-2	a	2	2	3
V-1	a	3	2	3
V-0	a	4	3	3

[a] The electrical RTI value of a material is to be determined in accordance with the Standard for Polymeric Materials – Long Term Property Evaluations, UL 746B by test or by use of the generic RTI table. This material characteristic is dependent upon the minimum thickness at which the material is being used and shall not be exceeded during the Temperature Test, Section 40.

[b] The HAI and HWI Performance Level Category (PLC) value of a material is to be determined by test in accordance with the Standard for Polymeric Materials – Short Term Property Evaluations, UL 746A. This material characteristic is dependent upon the minimum thickness at which the material is being used.

[c] The CTI PLC value of a material is to be determined by test in accordance with UL 746A. This material characteristic is not dependent upon the minimum thickness at which the material is being used. When the thickness of an insulating material is less than the minimum specified thickness corresponding to a CTI value, the material is evaluated as having the same CTI value found for the greater thickness. The CTI value applies to insulating materials used in pollution degree 3 environments for voltages of 600 V or less. For equipment where pollution degree 1 or 2 is maintained, an insulating material shall have a CTI PLC of 4 or less. For equipment rated 601 – 1500 volts, see footnote (e).

[d] A material without a CTI PLC value or with a CTI PLC value greater (worse) than the value required by Table 17.1 shall have a proof tracking index of 175 when used in pollution degree 3 environment or a proof tracking index of 100 when used in pollution degree 1 or 2 environment as determined by the end-product Proof Tracking Test specified in the Standard for Polymeric Materials – Use in Electrical Equipment Evaluations, UL 746C.

[e] For equipment rated 601 – 1500 volts, the insulating material shall not track beyond one inch in less than 60 minutes using the time to track method of the Inclined Plane Tracking Test specified in the Standard for Polymeric Materials – Short Term Property Evaluations, UL 746A. The voltage for the Inclined Plane Tracking Test shall be not less than the rated voltage of the equipment.

Table 17.2
Generic materials for the direct support of uninsulated live parts

Generic material	Minimum thickness		RTI, °C
Any cold-molded composition (i.e. concrete)	No limit		No limit
Ceramic, Porcelain and Slate	No limit		No limit
Diallyl Phthalate	0.028 inch	(0.71 mm)	105
Epoxy	0.028 inch	(0.71 mm)	105
Melamine	0.028 inch	(0.71 mm)	130
Melamine-Phenolic	0.028 inch	(0.71 mm)	130
Phenolic	0.028 inch	(0.71 mm)	150
Unfilled Nylon	0.028 inch	(0.71 mm)	105
Unfilled Polycarbonate	0.028 inch	(0.71 mm)	105
Urea Formaldehyde	0.028 inch	(0.71 mm)	100

NOTE: Each material shall be used within its minimum thickness and its RTI value shall not be exceeded during the Temperature Test, Section 40.

17.2 For equipment rated 601 – 1500 volts, an insulating material used as direct or indirect support of an uninsulated live part shall comply with 17.1, except for the CTI requirement specified in 17.1.

Documents
Document Sharing Hub
Full document details: UL 508C 2018

17.3 For equipment rated 601 – 1500 volts, an insulating material used as direct or indirect support of an uninsulated live part shall comply with The Inclined-Plane Tracking Test of the Standard for Polymeric Materials – Use in Electrical Equipment Evaluations, UL 746C.

Exception: The Inclined-Plane Tracking Test of the Standard for Polymeric Materials – Use in Electrical Equipment Evaluations, UL 746C, may be conducted at the application (rated) voltage.

17.4 An insulating material used as a barrier in lieu of the required spacings, shall comply with the requirements in 36.11.

17.5 A printed wiring board shall comply with the requirements in the Standard for Printed-Wiring Boards, UL 796, shall have a flammability rating of V-0, V-1, or V-2, and comply with the direct support requirements in 17.1.

18 Means for Switching

18.1 When a circuit breaker or switch is mounted such that movement of the operating handle, either vertically or rotationally, between the on and off positions results in one position being above the other position, the upper position shall be the on position. The requirement does not apply to a circuit breaker or switch that is operated horizontally or that is operated rotationally and the on and off positions are at the same level, nor to a switching device having two on positions, such as a transfer switch or a double throw switch.

18.2 All floor mounted equipment shall comply with 18.3 and 18.4. Wall mounted equipment with enclosures taller than 79 inches (2.0 m) shall be considered to be floor mounted equipment with respect to these requirements.

18.3 External handles and push-buttons shall be located in accordance with the following:

a) Every switch and circuit breaker handle shall be installed such that the handle is not more than 79 inches (2.0 m) above the floor.

b) Operating handles requiring more than 50 lbf (222 N) to operate shall not be higher than 66 inches (1.7 m) in either the open or closed position.

18.4 In determining compliance with 18.3, measurements shall be made to the center of the handle grip with the handle in the highest possible position. Where the handle grip is not clearly defined, it shall be considered to be at a point 3 inches (76 mm) in from the end of the handle.

18.5 If the mechanism of a switching device is such that automatic operation of a switch, or operation of a remote or automatic tripping devices will permit sudden movement of an operating handle, the motion of the handle shall be restricted or the handle shall be guarded to prevent injury to persons in the vicinity of the handle.

Documents
Document Sharing Hub
Full document details: UL 508C 2018

19 Live Parts

19.1 A current-carrying part shall have mechanical strength and ampacity for the intended use and shall be of metal or other material that is intended for the application.

19.2 An uninsulated live part, including a terminal, shall be secured to its supporting surface by a method other than friction between surfaces so that it is prevented from turning or shifting in position when such motion results in a reduction of the required spacings.

Exception: A pressure terminal connector is not required to be prevented from turning when no spacings less than those required result when the terminals are turned 30 degrees toward each other, or toward other uninsulated parts of opposite polarity, or toward grounded metal parts.

19.3 A live screwhead or nut on the underside of an insulating base shall be prevented from loosening and shall be insulated or spaced from the mounting surface. This is accomplished by:

a) Countersinking parts by at least 1/8 inch (3.2 mm) and covering them with a waterproof, insulating sealing compound that does not degrade at 15°C (27°F) higher than its normal operating temperature and not less than 65°C (149°F); or

b) Securing such parts and insulating them from the mounting surface by a barrier, or the equivalent, or by through air or over surface spacings specified elsewhere in this standard.

20 Drive Protection

20.1 General

20.1.1 A drive shall comply with the Short Circuit Test – Standard Fault Currents, Section 45. This short circuit protection must be either integral to the drive or referenced in accordance with 62.2.

Exception: Drive models rated 1 hp (745.7 W) and less that do not incorporate motor overload protection are not required to be tested in accordance with Section 45.

20.1.2 A drive that does not rely solely on solid-state short circuit protection shall also comply with the short circuit test power factor requirements in the Standard for Industrial Control Equipment, UL 508.

20.1.3 Drives shall comply with one of the following:

a) Be provided with a mechanical overload relay that complies with the applicable requirements in the Standard for Industrial Control Equipment, UL 508 and be marked in accordance with 61.1,

b) Be provided with solid state overload protection that is subjected to the requirements in Circuit Functionality Evaluation, Section 70, and that complies with the Solid State Motor Overload Protection Test, Section 43, and be marked in accordance with 61.1,

c) Be provided with means to accept and act upon a signal from a thermal sensor mounted in or on the motor, and be marked in accordance with 61.2, or

d) Be marked in accordance with 61.5.

Documents
Document Sharing Hub
Full document details: UL 508C 2018

20.1.4 Polyphase drives shall be provided with input phase loss protection that complies with 41.3.1.

20.1.5 Drives incorporating blower motors, filters, or both, shall comply with 41.4.1 and 41.5.1.

20.1.6 Drives provided with current limiting protection shall comply with 41.6.1.

20.1.7 Drives provided with phase reversal protection shall interrupt and maintain the interruption of power in all of the circuit.

20.1.8 A DC drive shall not incorporate overcurrent protection in a motor field supply circuit unless the drive incorporates a detector that senses loss of field current or voltage and prevents over-speed upon field loss.

20.1.9 When a drive is provided with a fuse, not evaluated in accordance with one of the applicable standards in Appendix A of this Standard, other than a line or bus fuse, that is not relied upon for compliance with this Standard, the fuse shall be evaluated by simulating a fault downstream that opens the fuse.

20.1.10 Drives shall comply with one of the following:

a) Be provided with motor load and speed sensitive overload protection with thermal memory retention, which complies with 43.3, 43.4, and 43.5,

b) Be provided with a means to accept and act upon a signal from a thermal sensor or switch imbedded in the motor or from an external protective relay, and is marked in accordance with 61.6, or

c) Have no provisions for motor overtemperature protection and be marked in accordance with 61.6.

20.2 Control circuit wiring

20.2.1 Primary and secondary circuit internal wiring shall be provided with additional protection that complies with 20.2.2 when it is:

a) Connected to the load side of the branch circuit short circuit protection (see 20.1.1);

b) Located in a circuit that incorporates the coil of an internal or external motor control contactor (such as for soft starting); and

c) Sized from 22 – 12 AWG (0.643 – 2.052 mm).

Exception No. 1: Wiring located in a Class 1 power-limited or Class 3 remote-control circuit or located in a Class 2 (see 32.2), Limited Voltage/Current (see 32.3), Limited Voltage (see 32.4), Limited Energy (see 32.6) or Limiting Impedance (see 32.7) secondary circuit is not required to be additionally protected.

Exception No. 2: Any wiring measuring a maximum of 12 inches (305 mm) long is not required to be additionally protected.

Exception No. 3: Any wiring connected to a printed wiring board having no connections external to the drive and having no more than casual contact with insulated or un-insulated parts of opposite polarity or with grounded parts is not required to be additionally protected.

Documents
Document Sharing Hub
Full document details: UL 508C 2018

Exception No. 4: When an instantaneous trip circuit breaker is used or intended for use as the branch circuit short circuit protection (see 20.1.1) and its rating or trip setting is not more than the applicable value specified in Table 20.1, then wiring is not required to be additionally protected when the drive is marked in accordance with 64.1.

Table 20.1
Branch-circuit short-circuit protection

Control-circuit wire size, AWG (mm^2)		Maximum rating of branch-circuit-protective device, amperes	
		Conductors within enclosure	Conductors outside enclosure
22	(0.32)	12	3
20	(0.52)	20	5
18	(0.82)	25	7
16	(1.3)	40	10
14	(2.1)	100	45
12	(3.3)	120	60

20.2.2 The additional wiring protection required by 20.2.1 shall:

a) Be located within the drive;

b) Be rated in accordance with Table 20.2;

c) Be provided in each ungrounded conductor;

d) Be located no more than 12 inches (305 mm) from the point where the wiring is connected to its source of power;

e) Either be a supplementary or a branch circuit type fuse in accordance with the UL 248 series or a branch circuit breaker in accordance with the Standard for Molded-Case Circuit Breakers, Molded-Case Switches and Circuit-Breaker Enclosures, UL 489; and

f) Be provided with a marking in accordance with 64.2.

Exception No. 1: This additional protection is not required to be included within the drive when it is shipped from the factory and meets the following:

a) The manufacturer makes available an accessory kit that complies with 20.2.2;

b) This accessory kit is evaluated for field installation; and

c) The drive is marked in accordance with 64.3.

Exception No. 2: This additional protection is not required to be shipped with the drive when the fuseholder is included within the drive and the unit is marked in accordance with 64.4.

Documents
Document Sharing Hub

Full document details: UL 508C 2018

Table 20.2
Overcurrent protection

Control-circuit wire Size, AWG (mm^2)		Maximum protective device rating, amperes
22	(0.32)	3
20	(0.52)	5
18	(0.82)	7
16	(1.3)	10
14	(2.1)	20
12	(3.3)	25

20.2.3 For drives with a short circuit current rating in excess of 10,000 amperes, the additional wiring protection required by 20.2.1 shall comply with 20.2.2 and be rated greater than or equal to the marked short circuit current rating of the drive. When fuses are used for this protection, they shall be Class CC, G, J, L, R, or T and be provided with an appropriate branch circuit type fuseholder.

20.3 Control circuit transformer

20.3.1 A transformer whose secondary supplies a circuit incorporating the coil of an internal or external motor control contactor (such as for soft starting) shall be provided with additional protection that complies with 20.3.2.

Exception: A transformer is not required to be additionally protected when any of the following conditions exist:

a) The transformer secondary supplies a Class 1 power-limited or Class 3 remote-control circuit or supplies a Class 2 (see 32.2), Limited Voltage/Current (see 32.3), Limited Voltage (see 32.4), Limited Energy (see 32.6) or Limiting Impedance (see 32.7) secondary circuit;

b) The transformer secondary is rated less than 50 VA, is inherently protected and is an integral part of the drive;

c) The branch circuit protection provides the required additional protection; or

d) The additional protection is provided by other means that comply with the applicable requirements in the National Electrical Code, ANSI/NFPA 70.

20.3.2 The additional transformer protection required by 20.3.1 shall either be a supplementary or a branch circuit type fuse or circuit breaker in accordance with the UL 248 series or the Standard for Molded-Case Circuit Breakers, Molded-Case Switches and Circuit-Breaker Enclosures, UL 489, respectively and shall be in accordance with either (a) or (b) below:

a) For protection provided only in the primary, the protection shall be provided in accordance with one of the following:

1) In each ungrounded conductor of the transformer primary and rated or set in accordance with Table 20.3;

Documents
Document Sharing Hub
Full document details: UL 508C 2018

2) In the transformer primary and rated or set at a maximum of six times the rated transformer primary current when the transformer has no more than 6 percent impedance and coordinated thermal overload protection is arranged to interrupt the primary circuit; or

3) In the transformer primary and rated or set at a maximum of four times the rated transformer primary current when the transformer has more than 6 percent and less than 10 percent impedance and coordinated thermal overload protection is arranged to interrupt the primary circuit;

b) For protection provided in both the primary and secondary, the protection shall be provided in accordance with one of the following:

1) In the transformer primary and rated or set at not more than 250 percent of the rated transformer primary current, and provided in the transformer secondary and rated or set at not more than 125 percent of the rated transformer secondary current; or

2) In the transformer primary and rated or set at not more than 250 percent of the rated transformer primary current, and provided in the transformer secondary and rated or set at not more than 167 percent of the rated transformer secondary current when the transformer rated secondary current is not more than 9 A.

Table 20.3
Maximum rating of overcurrent device

Rating primary current, amperes	Maximum rating of overcurrent protective device expressed as a percent of transformer primary current rating
Less than 2	500
2 to less than 9	167
9 or more	125[a]

[a] When 125 percent of the current does not correspond to a standard fuse or nonadjustable circuit breaker rating, then the next higher standard rating shall be used. See Section 240-6 of the National Electrical Code, ANSI/NFPA 70.

20.4 Control circuit wiring and transformer combination

20.4.1 For a single phase transformer with only one 2-wire secondary, compliance with the additional wiring and transformer protection requirements of 20.2.1 and 20.3.1 is obtainable by protective devices in any ungrounded primary conductor. The protective devices shall:

a) Be located in the primary of the transformer;

b) Have its maximum rating or setting limit calculated by using the appropriate protective device value from Table 20.2 based on the AWG of the secondary wiring and multiplying this value by the secondary-to-primary voltage ratio of the transformer; and

c) Have its actual rating or setting be within this maximum limit and also be in accordance with 20.3.2 (a) and (b).

Documents
Document Sharing Hub
Full document details: UL 508C 2018

21 Capacitors

21.1 A bus capacitor shall be rated for the voltage and the temperature of the circuit involved. This rating shall be based on the continuous working voltage rating and the overvoltage surge rating.

21.2 A capacitor in an ac circuit shall have rms and peak voltage ratings not less than the voltage of the circuit involved. Capacitors investigated to either the Standard for Fixed Capacitors for Use in Electronic Equipment – Part 14: Sectional Specification: Fixed Capacitors for Electromagnetic Interference Suppression and Connection to the Supply Mains, UL 60384-14, or the Standard for Electromagnetic Interference Filters, UL 1283, are considered to have a peak voltage rating of 1.4 times the rms rating.

21.3 A means shall be provided to discharge each bus capacitor to a voltage level below 50 V DC within 1 minute.

Exception: Drives are not required to comply with this discharge requirement when they are provided with instructions that read, "WARNING – Risk of Electric Shock ," followed by instructions to discharge the specific capacitor or indicating the time required for the capacitor to discharge to a level below 50 V DC.

21.4 A motor starting capacitor employing a liquid dielectric medium more combustible than askarel shall comply with the protected oil filled capacitor requirements, contained in the Standard for Capacitors, UL 810, including faulted overcurrent conditions based on the branch circuit in which it is used (see the Short Circuit Test – Standard Fault Currents, Section 45). A motor starting capacitor and any associated solid state component shall be evaluated in accordance with the Breakdown of Components Test, Section 51.

Exception: When the available fault current is limited by other components in the circuit such as a motor-start winding, the capacitor is able to be tested using a fault current less than the value specified in Table 45.1, and not less than the current established by dividing the rated circuit voltage by the impedance of the other components.

21.5 A non-motor starting capacitor employing a liquid dielectric medium more combustible than askarel, and any associated solid-state component, is only required to be evaluated in accordance with the Breakdown of Components Test, Section 51.

22 Fuseholders

22.1 A fuseholder shall be of the cartridge type.

22.2 A cartridge fuseholder shall be constructed for use with a branch-circuit fuse.

Exception: When a supplementary fuse is used, the fuseholder shall be constructed for use with the supplementary fuse.

22.3 Power conversion equipment incorporating a fuseholder and the location of fuses, the normal function of which requires renewal, shall be so constructed that the fuses are readily accessible when the switch contacts are open so that a person is not required to touch any live part to replace any fuse. The electrical arrangement of a single-throw switch shall be such that when it is connected as intended and the contacts are open, the fuse terminals are dead.

Exception: A control-circuit fuse arrangement is not required to comply with this requirement when the fuse and control-circuit load – other than a fixed control-circuit load, such as a pilot lamp – are within the same enclosure.

Documents
Document Sharing Hub
Full document details: UL 508C 2018

23 Internal Wiring

23.1 General

23.1.1 The wiring and connections between parts of the equipment shall be protected from mechanical damage during installation.

23.1.2 The insulation on all internal wires of the equipment shall be rated for the voltage and the temperature conditions of use. It shall also be evaluated with respect to other conditions of service to which it is intended to be subjected. The voltage rating shall cover an RMS voltage and the peak equivalence (square root of 2 multiplied by the RMS value) voltage. Insulation shall be at least 1/32 inch (0.8 mm) thick when the internal wiring is subjected to movement, flexing, handling, or manipulation during its intended use, or during mechanical maintenance.

23.2 Routing

23.2.1 A hole through which insulated wires pass in a sheet metal wall within the enclosure of the equipment shall be provided with a smooth, well-rounded bushing or shall have smooth, well-rounded surfaces upon which the wires bear to reduce the risk of abrasion of the insulation.

23.2.2 Wires shall be routed away from sharp edges, screw threads, burrs, fins, moving parts, drawers, and similar parts, that abrade the wire insulation.

23.2.3 Clamps and guides, either metallic or nonmetallic, used for routing stationary internal wiring shall be provided with smooth, well-rounded edges. The clamping action and bearing surface shall be such that abrasion or cold flow of the insulation does not occur. Auxiliary nonconducting mechanical protection shall be provided under a metallic clamp that exerts pressure on a conductor having thermoplastic insulation less than 1/32 inch (0.8 mm) thick and having no overall braid.

23.3 Flexing

23.3.1 Wiring that is subject to flexing during servicing such as that from a stationary part to a part mounted on a hinged door shall be provided with additional insulation at any point where it is flexed, unless the wiring is flexible cord.

Exception: Additional insulation is not required when damage to the wiring is not evident and the wiring withstands the Dielectric Voltage-Withstand Test, Section 44 applied between conductors and between conductors and ground, after the wiring is mounted on a door and tested by opening the door as far as possible and then closing it for 500 cycles of operation (restraints such as a chain are to remain in place).

23.3.2 Additional insulation, when used, shall be insulating sleeving, tubing, or a wrapping of not less than two layers of insulating tape. The insulation shall be made of materials rated for the temperature and voltage involved.

Documents
Document Sharing Hub

Full document details: UL 508C 2018

23.4 Color coding

23.4.1 Insulated grounding and bonding conductors shall be identified by the color green with or without one or more yellow stripes throughout the entire product. No other leads shall be so identified.

Exception No. 1: Insulated conductors sized 4 AWG or larger are able to be identified at each termination point by a green marking, such as green tape wrapped around the conductor.

Exception No. 2: This requirement does not apply to a green or green/yellow conductor provided in a wiring harness, ribbon cable, or similar prefabricated wiring assembly which is not likely to be mistaken for a grounding conductor.

23.5 Splices and connections

23.5.1 All splices and connections shall be mechanically secure and shall provide electrical continuity.

23.5.2 Electrical connections shall be soldered, welded, crimped, or otherwise securely connected. A soldered joint shall be mechanically secure before soldering.

Exception: Printed wiring board joints are not required to be mechanically secure before soldering.

23.5.3 A lead is mechanically secure when it is:

a) Wrapped at least halfway (180 degrees) around a terminal;

b) Provided with at least one right angle bend when passed through an eyelet or opening; or

c) Twisted with other conductors.

23.5.4 When stranded internal wiring is connected to a wire-binding screw, the construction shall be such that loose strands of wire do not contact:

a) Other uninsulated live parts not always of the same polarity as the wire; and

b) De-energized metal parts.

Means, that meet the intent of the requirement, include machine- or tool-applied pressure terminal connectors, soldering lugs, crimped eyelets, or the soldering of all strands of the wire together.

Documents
Document Sharing Hub

Full document details: UL 508C 2018