UL 514C

ISBN 0-7629-0116-0

Nonmetallic Outlet Boxes, Flush-Device Boxes, and Covers

Document Was Downloaded By Rice, Shi SHIMISHENG
For Use By KUANTECH CO LTD
12039 : 8/13/2007 - 2:52 AM

UL COPYRIGHTED MATERIAL –
NOT AUTHORIZED FOR FURTHER REPRODUCTION OR
DISTRIBUTION WITHOUT PERMISSION FROM UL

Documents
Document Sharing Hub

Full document details: UL 514c 2007

Document Was Downloaded By Rice, Shi SHIMISHENG
For Use By KUANTECH CO LTD
12039 : 8/13/2007 - 2:52 AM

UL COPYRIGHTED MATERIAL –
NOT AUTHORIZED FOR FURTHER REPRODUCTION OR
DISTRIBUTION WITHOUT PERMISSION FROM UL

Documents
Document Sharing Hub

Underwriters Laboratories Inc. (UL)
333 Pfingsten Road
Northbrook, IL 60062-2096

UL Standard for Safety for Nonmetallic Outlet Boxes, Flush-Device Boxes, and Covers, UL 514C

Third Edition, Dated December 26, 1996

Revisions: This Standard contains revisions through and including March 13, 2007.

Summary of Topics

In accordance with the postponement of effective date announcement dated October 16, 2006, the effective date for paragraphs 29.2.1 and 29.2.3 has been changed from July 18, 2007 to July 16, 2008.

UL Standards for Safety are developed and maintained in the Standard Generalized Markup Language (SGML). SGML -- an international standard (ISO 8879-1986) -- is a descriptive markup language that describes a document's structure and purpose, rather than its physical appearance on a page. Due to formatting differences resulting from the use of UL's new electronic publishing system, please note that additional pages (on which no requirements have been changed) may be included in revision pages due to relocation of existing text and reformatting of the Standard.

Text that has been changed in any manner is marked with a vertical line in the margin. Changes in requirements are marked with a vertical line in the margin and are followed by an effective date note indicating the date of publication or the date on which the changed requirement becomes effective.

The following table lists the future effective dates with the corresponding item.

Future Effective Date	References
July 16, 2008	29.2.1 and 29.2.3

The revisions dated March 13, 2007 include a reprinted title page (page1) for this Standard.

As indicated on the title page (page 1), this UL Standard for Safety is an American National Standard. Attention is directed to the note on the title page of this Standard outlining the procedures to be followed to retain the approved text of this ANSI/UL Standard.

As indicated on the title page (page1), this UL Standard for Safety has been adopted by the Department of Defense.

The UL Foreword is no longer located within the UL Standard. For information concerning the use and application of the requirements contained in this Standard, the current version of the UL Foreword is located on ULStandardsInfoNet at: http://ulstandardsinfonet.ul.com/ulforeword.html

The master for this Standard at UL's Northbrook Office is the official document insofar as it relates to a UL service and the compliance of a product with respect to the requirements for that product and service, or if there are questions regarding the accuracy of this Standard.

Document Was Downloaded By Rice, Shi SHIMISHENG
For Use By KUANTECH CO LTD
12039 : 8/13/2007 - 2:52 AM

UL COPYRIGHTED MATERIAL –
NOT AUTHORIZED FOR FURTHER REPRODUCTION OR
DISTRIBUTION WITHOUT PERMISSION FROM UL

Documents
Document Sharing Hub

Full document details: UL 514c 2007

UL's Standards for Safety are copyrighted by UL. Neither a printed copy of a Standard, nor the distribution diskette for a Standard-on-Diskette and the file for the Standard on the distribution diskette should be altered in any way. All of UL's Standards and all copyrights, ownerships, and rights regarding those Standards shall remain the sole and exclusive property of UL.

All rights reserved. No part of this publication may be reproduced, stored in a retrieval system, or transmitted in any form by any means, electronic, mechanical photocopying, recording, or otherwise without prior permission of UL.

Revisions of UL Standards for Safety are issued from time to time. A UL Standard for Safety is current only if it incorporates the most recently adopted revisions.

UL provides this Standard ″as is″ without warranty of any kind, either expressed or implied, including but not limited to, the implied warranties of merchantability or fitness for any purpose.

In no event will UL be liable for any special, incidental, consequential, indirect or similar damages, including loss of profits, lost savings, loss of data, or any other damages arising out of the use of or the inability to use this Standard, even if UL or an authorized UL representative has been advised of the possibility of such damage. In no event shall UL's liability for any damage ever exceed the price paid for this Standard, regardless of the form of the claim.

UL will attempt to answer support requests concerning electronic versions of its Standards. However, this support service is offered on a reasonable efforts basis only, and UL may not be able to resolve every support request. UL supports the electronic versions of its Standards only if they are used under the conditions and operating systems for which it is intended. UL's support policies may change from time-to-time without notification.

UL reserves the right to change the format, presentation, file types and formats, delivery methods and formats, and the like of both its printed and electronic Standards without prior notice.

Purchasers of the electronic versions of UL's Standards for Safety agree to defend, indemnify, and hold UL harmless from and against any loss, expense, liability, damage, claim, or judgement (including reasonable attorney's fees) resulting from any error or deviation introduced while purchaser is storing an electronic Standard on the purchaser's computer system.

If a single-user version electronic Standard was purchased, one copy of this Standard may be stored on the hard disk of a single personal computer, or on a single LAN file-server or the permanent storage device of a multiple-user computer in such a manner that this Standard may only be accessed by one user at a time and for which there is no possibility of multiple concurrent access.

If a multiple-user version electronic Standard was purchased, one copy of the Standard may be stored on a single LAN file-server, or on the permanent storage device of a multiple-user computer, or on an Intranet server. The number of concurrent users shall not exceed the number of users authorized.

Electronic Standards are intended for on-line use, such as for viewing the requirements of a Standard, conducting a word search, and the like. Only one copy of the Standard may be printed from each single-user version of an electronic Standard. Only one copy of the Standard may be printed for each authorized user of a multiple-user version of an electronic Standard. Because of differences in the computer/software/printer setup used by UL and those of electronic Standards purchasers, the printed copy obtained by a purchaser may not look exactly like the on-line screen view or the printed Standard.

An employee of an organization purchasing a UL Standard can make a copy of the page or pages being viewed for their own fair and/or practical internal use.

Document was Downloaded By Nice Shi SHANISHENG
For Use by NUAA RESEARCH CO LTD
2009 : 8/1 3/2007 : 2:52 AM

UL COPYRIGHTED MATERIAL –
NOT AUTHORIZED FOR FURTHER REPRODUCTION OR
DISTRIBUTION WITHOUT PERMISSION FROM UL

Documents
Document Sharing Hub

Full document details: UL 514c 2007

The requirements in this Standard are now in effect, except for those paragraphs, sections, tables, figures, and/or other elements of the Standard having future effective dates as indicated in the note following the affected item. The prior text for requirements that have been revised and that have a future effective date are located after the Standard, and are preceded by a ″SUPERSEDED REQUIREMENTS″ notice.

A change in an effective date is indicated by a note following the affected item, and giving both the previous effective date and the new date the requirement becomes effective.

New product submittals made prior to a specified future effective date will be judged under all of the requirements in this Standard including those requirements with a specified future effective date, unless the applicant specifically requests that the product be judged under the current requirements. However, if the applicant elects this option, it should be noted that compliance with all the requirements in this Standard will be required as a condition of continued Listing and Follow-Up Services after the effective date, and understanding of this should be signified in writing.

Copyright © 2007 Underwriters Laboratories Inc.

Document Was Downloaded By Rice, Shi SHIMISHENG
For Use By KUANTECH CO LTD
12039 : 8/13/2007 - 2:52 AM

UL COPYRIGHTED MATERIAL –
NOT AUTHORIZED FOR FURTHER REPRODUCTION OR
DISTRIBUTION WITHOUT PERMISSION FROM UL

Documents
Document Sharing Hub

Full document details: UL 514c 2007

This Standard consists of pages dated as shown in the following checklist:

Page	Date
1	March 13, 2007
2-4B	January 31, 2005
5-6B	December 20, 2006
7	January 31, 2005
8	November 13, 2002
9-10B	January 31, 2005
11	December 26, 1996
12-13	June 4, 2001
14-16B	January 31, 2005
17	November 13, 2002
18-18B	June 4, 2001
19-20A	November 13, 2002
20B	January 31, 2005
21-22	June 4, 2001
22A	January 31, 2005
22B	March 13, 2007
23	January 31, 2005
24-26A	June 4, 2001
26B	November 13, 2002
26C-26D	June 4, 2001
27	November 13, 2002
28	June 4, 2001
29	February 25, 2000
30-31	December 26, 1996
32-32B	November 13, 2002
33	June 4, 2001
34-36	November 13, 2002
36A-36B	June 4, 2001
37-38	January 31, 2005
39-42	November 13, 2002
43-44B	January 31, 2005
45-49	December 20, 1999
50-52	December 26, 1996
53-55	June 4, 2001
56-57	December 26, 1996
58-59	December 20, 1999
60-61	June 4, 2001
62	December 26, 1996
63-64	June 4, 2001
65	December 26, 1996
66	December 20, 1999
67	June 4, 2001
68	November 13, 2002
69	December 20, 1999
70-70A	January 31, 2005
70B	June 4, 2001
71	February 25, 2000
72-72B	January 31, 2005
73-74	November 13, 2002

Document Was Downloaded By Rice, Shi SHIMISHENG
For Use By KUANTECH CO LTD
12039 : 8/13/2007 - 2:52 AM

UL COPYRIGHTED MATERIAL –
NOT AUTHORIZED FOR FURTHER REPRODUCTION OR
DISTRIBUTION WITHOUT PERMISSION FROM UL

Documents
Document Sharing Hub

Full document details: UL 514c 2007

SA1-SA2 . . . . . November 13, 2002
SA3-SA4 . . . . . December 20, 2006
SB1-SB10 . . . . . December 20, 2006
SR1-SR2 . . . . . July 18, 2005

Document Was Downloaded By Rice, Shi SHIMISHENG
For Use By KUANTECH CO LTD
12039 : 8/13/2007 - 2:52 AM

UL COPYRIGHTED MATERIAL –
NOT AUTHORIZED FOR FURTHER REPRODUCTION OR
DISTRIBUTION WITHOUT PERMISSION FROM UL

Documents
Document Sharing Hub

Full document details: UL 514c 2007

No Text on This Page

Document Was Downloaded By Rice, Shi SHIMISHENG
For Use By KUANTECH CO LTD
12039 : 8/13/2007 - 2:52 AM

UL COPYRIGHTED MATERIAL –
NOT AUTHORIZED FOR FURTHER REPRODUCTION OR
DISTRIBUTION WITHOUT PERMISSION FROM UL

Documents
Document Sharing Hub

Full document details: UL 514c 2007

DECEMBER 26, 1996
(Title Page Reprinted: March 13, 2007)

ANSI/UL 514C-2006

UL 514C

Standard for Nonmetallic Outlet Boxes, Flush-Device Boxes, and Covers

First Edition – August, 1979
Second Edition – October, 1988

Third Edition

December 26, 1996

The most recent designation of ANSI/UL 514C as an American National Standard (ANSI) occurred on December 19, 2006. The ANSI approval for this standard does not include the cover page, transmittal pages, or title page.

This ANSI/UL Standard for Safety, which consists of the Third Edition with revisions through December 20, 2006, is under continuous maintenance, whereby each revision is ANSI approved upon publication.

An effective date included as a note immediately following certain requirements is one established by Underwriters Laboratories Inc. and is not included as part of the ANSI standard.

The Department of Defense (DoD) has adopted UL 514C on August 17, 1989. The publication of revised pages or a new edition of this Standard will not invalidate the DoD adoption.

Revisions of this Standard will be made by issuing revised or additional pages bearing their date of issue. A UL Standard is current only if it incorporates the most recently adopted revisions, all of which are itemized on the transmittal notice that accompanies the latest set of revised requirements. Comments or proposals for revisions on any part of the Standard may be submitted to UL at any time. Proposals should be submitted via a Proposal Request in UL's On-Line Collaborative Standards Development System (CSDS) at http://csds.ul.com.

ISBN 07629-0116-0

COPYRIGHT © 1979, 2007 UNDERWRITERS LABORATORIES INC.

Document Was Downloaded By Rice, Shi SHIMISHENG
For Use By KUANTECH CO LTD
12039 : 8/13/2007 - 2:52 AM

UL COPYRIGHTED MATERIAL –
NOT AUTHORIZED FOR FURTHER REPRODUCTION OR
DISTRIBUTION WITHOUT PERMISSION FROM UL

Documents
Document Sharing Hub

Full document details: UL 514c 2007

No Text on This Page

Document Was Downloaded By Rice, Shi SHIMISHENG
For Use By KUANTECH CO LTD
12039 : 8/13/2007 - 2:52 AM

UL COPYRIGHTED MATERIAL –
NOT AUTHORIZED FOR FURTHER REPRODUCTION OR
DISTRIBUTION WITHOUT PERMISSION FROM UL

Documents
Document Sharing Hub

Full document details: UL 514c 2007

CONTENTS

INTRODUCTION

1 Scope 7
2 Terminology 7
3 Glossary 7
4 Units of Measurement 9

BOXES AND COVERS

CONSTRUCTION

5 General 9
5.1 All boxes and covers 9
5.2 Boxes and covers intended for use with nonmetallic-sheathed cable or open wiring . . . 10
5.3 Boxes and covers intended for use with rigid nonmetallic conduit 10
5.4 Nonmetallic outlet box covers for use in damp and wet locations 10A
5.5 Boxes and covers intended for use with electrical nonmetallic tubing 10A
6 Protection Against Corrosion 10A
7 Assembly 10B
8 Dimensions 11
9 Device Support 12
10 Floor Boxes 12
11 Ceiling-Suspended Fan Support 12
12 Partitions 13

PERFORMANCE

13 General 14
14 Protection Against Corrosion 14
15 Volume Verification Test 14B
16 Scrub-Water Exclusion Test 14B
16A Floor Box and Cover Loading Test 15
16B Support for Floor Boxes 16

BOXES INTENDED FOR USE WITH NONMETALLIC-SHEATHED CABLE OR OPEN WIRING

CONSTRUCTION

17 Materials 16A

PERFORMANCE

18 Hot-Wire Ignition 17
19 Dielectric Voltage Withstand 17

Document Was Downloaded By Rice, Shi SHIMISHENG
For Use By KUANTECH CO LTD
12039 : 8/13/2007 - 2:52 AM

UL COPYRIGHTED MATERIAL –
NOT AUTHORIZED FOR FURTHER REPRODUCTION OR
DISTRIBUTION WITHOUT PERMISSION FROM UL

Documents
Document Sharing Hub

Full document details: UL 514c 2007

BOXES INTENDED FOR USE WITH NONMETALLIC-SHEATHED CABLE OR OPEN WIRING

CONSTRUCTION

20 Knockouts 18
21 Connections for Wiring Systems 18
22 Clamps for Nonmetallic-Sheathed Cable 18A
23 Supports 18B
24 Grounding 19
25 Extension Rings 19
25A Box Extenders 20

PERFORMANCE

26 Knockouts 20A
27 Clamps for Nonmetallic-Sheathed Cable 20A
27.1 Pull Test 20A
27.2 Aging and dielectric voltage-withstand test 21
27.3 Pull test of 25 lbs (110 N) 21
27.4 Assembly at Low Temperature Test 22A
28 Clamps for Flexible Nonmetallic Tubing 22A
29 Supports 22A
29.1 General 22A
29.2 Fixture support 22B
29.3 Ceiling-suspended fan support 24
29.4 Boxes intended to be installed in a finished structure 26
29.4A Boxes for support of products up to 50 pounds (22.7 kg) 26A
29.5 Polymeric supporting means 26A
30 Water Absorption 26B
31 Flammability 26B
31.1 Materials 26B
31.2 Boxes 27
32 Mold Stress 29
33 Resistance to Crushing 29
34 Resistance to Impact 30
35 Threaded or Unthreaded Holes for Screws in Molded Bosses 31
36 Openings Employing Quick-Set Fastening Devices 32

COVERS FOR BOXES INTENDED FOR USE WITH NONMETALLIC-SHEATHED CABLE OR OPEN WIRING

CONSTRUCTION

37 Materials 34
37.1 General 34
37.2 Relative thermal index 34
38 Holes in Outlet Box Covers 34
39 Flush-Device Cover Plates 35

Document Was Downloaded By Rice, Shi SHIMISHENG
For Use By KUANTECH CO LTD
12039 : 8/13/2007 - 2:52 AM

UL COPYRIGHTED MATERIAL –
NOT AUTHORIZED FOR FURTHER REPRODUCTION OR
DISTRIBUTION WITHOUT PERMISSION FROM UL

Documents
Document Sharing Hub

Full document details: UL 514c 2007

PERFORMANCE

40 Flammability 36
41 Flush-Device Cover Plates 37
41A Outlet Box Covers for Support of a Device 37

NONMETALLIC OUTLET BOX COVERS FOR USE IN DAMP AND WET LOCATIONS

CONSTRUCTION

42 General 37
43 Protection Against Corrosion 38
44 Relative Thermal Index of Materials 38
45 Gaskets 38
46 Installation of Receptacles 38

PERFORMANCE

47 General 39
48 Sealing Compound 39
49 Gaskets 40
50 Resistance to Moisture 40
50.1 General 40
50.2 Assemblies for use in wet locations and wet locations with cover closed 40A
50.3 Assemblies for use in wet locations 40A
51 Resistance to Ultraviolet Light and Water 40B
52 Mold Stress 40B
53 Water Absorption 41
54 Dielectric Voltage Withstand 41
55 Hot-Wire Ignition 42
56 Crushing 42
57 Impact 42
58 Flammability 43

BOXES INTENDED FOR USE WITH ELECTRICAL NONMETALLIC TUBING

CONSTRUCTION

58A General 43

PERFORMANCE

58B General 44

COVERS INTENDED FOR USE WITH BOXES INTENDED FOR USE WITH ELECTRICAL NONMETALLIC TUBING

CONSTRUCTION

58C General 44

Document Was Downloaded By Rice, Shi SHIMISHENG
For Use By KUANTECH CO LTD
12039 : 8/13/2007 - 2:52 AM

UL COPYRIGHTED MATERIAL –
NOT AUTHORIZED FOR FURTHER REPRODUCTION OR
DISTRIBUTION WITHOUT PERMISSION FROM UL

Documents
Document Sharing Hub

Full document details: UL 514c 2007

PERFORMANCE

58D General 44A

BOXES AND COVERS INTENDED FOR USE WITH RIGID NONMETALLIC CONDUIT

CONSTRUCTION

59 General 44A
60 Bodies, Boxes, and Covers 44A
60.1 General 44A
60.2 Thickness 45
60.3 Connections for conduit 45
60.4 Covers 47
61 Boxes Intended for Use in Wet Locations 49
62 Conduit Bodies 49

PERFORMANCE

63 General 52
64 Knockouts 52
65 Supports 52
66 Closures 52
67 Water Absorption 52
68 Flame-Retardant Properties 53
69 Heat Distortion 53
70 Extrusion or Molding Process 54
71 Physical Properties 54
71.1 General 54
71.2 Preparation of specimens 54
71.3 Test method 56
72 Identification Tests 57
73 Flexural Strength 57
74 Resistance to Crushing 58
75 Low-Temperature Handling 58
76 Resistance to Impact 58
77 Bending 59
78 Pull Out 60
79 Resistance to Specific Reagents 61
80 Wet Locations 62
81 Concrete Tightness 64

FLOOR NOZZLES

CONSTRUCTION

82 Materials 66
82.1 General 66
82.2 Relative thermal index 66

Document Was Downloaded By Rice, Shi SHUMISHENG
For Use By KUANTECH CO LTD
12039 : 8/13/2007 - 2:52 AM

UL COPYRIGHTED MATERIAL –
NOT AUTHORIZED FOR FURTHER REPRODUCTION OR
DISTRIBUTION WITHOUT PERMISSION FROM UL

Documents
Document Sharing Hub

Full document details: UL 514c 2007

PERFORMANCE

83 General 66
84 Resistance to Impact 66
85 Resistance to Crushing 68

MARKING

86 Details 68
86.1 General 68
86.2 Boxes intended for use with nonmetallic-sheathed cable or open wiring 71
86.3 Boxes intended for use with rigid nonmetallic conduit 71
86.4 Outlet box covers for use in wet and damp locations 72
86.5 Boxes intended for use with electrical nonmetallic tubing 72
87 Instructions 72A

SUPPLEMENT SA - NONMETALLIC OUTLET BOXES FOR MARINE USE

GENERAL

SA1 Scope SA1
SA2 Glossary SA1

CONSTRUCTION

SA3 General SA1
SA4 Mounting SA2
SA5 Supply Connections SA2

PERFORMANCE

SA6 Watertight Test SA2
SA7 Dripproof Test SA2
SA8 Air-Oven Conditioning Test – Gaskets SA3

MARKING

SA9 General SA3

SUPPLEMENT SB - NONMETALLIC BOXES FOR INSTALLATION IN FIRE RESISTANCE RATED WALL AND PARTITION ASSEMBLIES

GENERAL

SB1 Scope SB1
SB2 Glossary SB1

Document Was Downloaded By Rice, Shi SHIMISHENG
For Use By KUANTECH CO LTD
12039 : 8/13/2007 - 2:52 AM

UL COPYRIGHTED MATERIAL –
NOT AUTHORIZED FOR FURTHER REPRODUCTION OR
DISTRIBUTION WITHOUT PERMISSION FROM UL

Documents
Document Sharing Hub

Full document details: UL 514c 2007

CONSTRUCTION

SB3 General SB2

PERFORMANCE

SB4 General SB2
SB5 Test Assembly SB3
SB5.1 General SB3
SB5.2 Materials SB7
SB5.3 Construction of the test assembly SB8
SB5.4 Testing SB9
SB6 Acceptance Criteria SB9

MARKING

SB7 General SB10

Document Was Downloaded By Rice, Shi SHIMISHENG
For Use By KUANTECH CO LTD
12039 : 8/13/2007 - 2:52 AM

UL COPYRIGHTED MATERIAL –
NOT AUTHORIZED FOR FURTHER REPRODUCTION OR
DISTRIBUTION WITHOUT PERMISSION FROM UL

Documents
Document Sharing Hub

Full document details: UL 514c 2007

No Text on This Page

Document Was Downloaded By Rice, Shi SHIMISHENG
For Use By KUANTECH CO LTD
12039 : 8/13/2007 - 2:52 AM

UL COPYRIGHTED MATERIAL –
NOT AUTHORIZED FOR FURTHER REPRODUCTION OR
DISTRIBUTION WITHOUT PERMISSION FROM UL

Documents
Document Sharing Hub

Full document details: UL 514c 2007

This page intentionally left blank.

Document Was Downloaded By Rice, Shi SHIMISHENG
For Use By KUANTECH CO LTD
12039 : 8/13/2007 - 2:52 AM

UL COPYRIGHTED MATERIAL –
NOT AUTHORIZED FOR FURTHER REPRODUCTION OR
DISTRIBUTION WITHOUT PERMISSION FROM UL

Documents
Document Sharing Hub

Full document details: UL 514c 2007

INTRODUCTION

1 Scope

1.1 These requirements cover nonmetallic outlet boxes, conduit bodies, flush-device boxes, extension rings, covers, floor boxes, floor nozzles, and concrete boxes to be employed in accordance with the National Electrical Code, NFPA 70.

1.1 revised November 13, 2002

1.2 These requirements do not cover boxes and covers for use in hazardous locations as defined in the National Electrical Code, NFPA 70.

1.3 These requirements do not cover cabinets and cutout boxes.

1.4 A product that contains features, characteristics, components, materials, or systems new or different from those covered by the requirements in this standard, and that involves a risk of fire or of electric shock or injury to persons shall be evaluated using appropriate additional component and end-product requirements to maintain the level of safety as originally anticipated by the intent of this standard. A product whose features, characteristics, components, materials, or systems conflict with specific requirements or provisions of this standard does not comply with this standard. Revision of requirements shall be proposed and adopted in conformance with the methods employed for development, revision, and implementation of this standard.

1.4 revised June 4, 2001

2 Terminology

2.1 In the following text, a requirement that applies only to one or more types of box or cover is so identified by a specific reference in that requirement to the type or types of boxes or covers involved. Absence of such reference indicates that the requirement applies to all types of boxes or covers.

3 Glossary

3.1 For the purpose of this standard the following definitions apply.

3.1.1 BOX EXTENDER – A component installed in or on a box that is mounted in a finished structure intended to extend the electrical enclosure up to the new finished surface. The box extender rests on the edge of the existing box (fixed depth) or extends into the box (adjustable depth). The flange of the box extender, if provided, rests on the finished surface.

3.1.1 revised January 31, 2005

3.2 CLAMP – Part of a box intended to secure raceway, tubing, or cable to the box.

3.3 CONCRETE BOX – A box intended for support in concrete. It may be constructed to permit end-to-end extension and the application of covers on two sides. It is not intended for installation in a floor.

3.4 CONDUIT BODY – A separate part of a raceway system intended to provide access to the interior of the system through one or more removable covers at a junction of two or more sections or at a terminal point. Boxes, such as FS, FD, and larger boxes, and fittings, such as capped elbows and service entrance elbows, are not considered to be conduit bodies.

Document was downloaded by Rice, Shi SHIMISHENG
For Use By KUANTECH CO LTD
12039 : 8/13/2007 : 2:52 AM

UL COPYRIGHTED MATERIAL –
NOT AUTHORIZED FOR FURTHER REPRODUCTION OR
DISTRIBUTION WITHOUT PERMISSION FROM UL

Documents
Document Sharing Hub

Full document details: UL 514c 2007

3.5 EXTENSION RING – A ring, which is not required to be round, intended to extend the sides of an outlet box or flush-device box to increase the box depth, volume or both. It is mechanically secured to the box.

3.5 revised November 13, 2002

3.6 FLOOR BOX – A box provided with means for flush mounting in a floor. It is sealed against the entrance of scrub water at the floor level.

3.7 FLOOR NOZZLE – An enclosure used on a wiring system, intended primarily as a housing for a receptacle. It is provided with a means, such as a collar, for surface-mounting on a floor, and it may or may not include a stem to support it above the floor level. It is sealed against the entrance of scrub water at the floor level.

3.8 FLUSH-DEVICE BOX – A box provided with ears or flanges with No. 6-32 threaded or unthreaded holes spaced to accept the mounting yoke of a wiring device or devices. This box is provided with a mounting means, and it may or may not include clamps for connection of cable, tubing, or conduit.

3.8 revised November 13, 2002

3.9 Deleted November 13, 2002

3.10 OUTLET BOX – A box used on a wiring system, usually at an outlet. It is provided with means for connection to a wiring system and intended primarily to enclose splices and wiring devices, but may also be acceptable as the support of a fixture or other equipment intended for similar installation. This box may or may not be provided with studs or a bar hanger or with clamps for securing cable, tubing, or conduit.

3.11 OUTLET BOX COVER – A cover intended to provide enclosure for the face of a box. The cover may or may not support or be provided with means for support of a wiring device, pendant cord, or the like.

3.12 PARTITION – A barrier used to separate sections of a box.

3.13 RAISED-FLOOR BOX – A floor box intended for use in raised floors, such as in electronic computer/data processing equipment rooms.

Added 3.13 effective December 20, 2001

Document Was Downloaded By Rice, Shi SHIMISHENG
For Use By KUANTECH CO LTD
12039 : 8/13/2007 - 2:52 AM

UL COPYRIGHTED MATERIAL –
NOT AUTHORIZED FOR FURTHER REPRODUCTION OR
DISTRIBUTION WITHOUT PERMISSION FROM UL

Documents
Document Sharing Hub

Full document details: UL 514c 2007

4 Units of Measurement

4.1 Values stated without parentheses are the requirement. Values in parentheses are explanatory or approximate information.

4.1 revised June 4, 2001

BOXES AND COVERS

CONSTRUCTION

5 General

5.1 All boxes and covers

5.1.1 The construction of a box or cover shall provide sufficient strength and rigidity in the finished product to enable the product to resist the rough handling that can be encountered during shipment, installation, and use.

5.1.2 The inner and outer surfaces of a box or cover shall not be subject to peeling, scaling or flaking and shall be smooth and free from blisters, cracks, and other defects. In the case of a molded product, excess flashing shall be removed from the mold line of all interior surfaces so that there are no sharp edges or undue obstructions to the passage of wiring or mating of parts in the intended use of the product.

5.1.3 A partition shall comply with the requirements in Partitions, Section 12.

Effective date for 5.1.3 changed from February 1, 2000 to May 1, 2000

5.1.4 A box intended for use with a partition shall have provision for proper placement of the partition during and after installation.

Effective date for 5.1.4 changed from February 1, 2000 to May 1, 2000

5.1.5 A box extender shall comply with Box Extenders, Section 25A.

5.1.5 added November 13, 2002

5.1.6 An outlet box cover constructed to support a flush duplex receptacle shall be provided with more than one securement point for the receptacle.

5.1.6 added January 31, 2005

Document Was Downloaded By Rice, Shi SHIMISHENG
For Use By KUANTECH CO LTD
12039 : 8/13/2007 - 2:52 AM

UL COPYRIGHTED MATERIAL –
NOT AUTHORIZED FOR FURTHER REPRODUCTION OR
DISTRIBUTION WITHOUT PERMISSION FROM UL

Documents
Document Sharing Hub

Full document details: UL 514c 2007

5.2 Boxes and covers intended for use with nonmetallic-sheathed cable or open wiring

5.2.1 The requirements in Sections 6 – 40 cover boxes and covers intended for use with nonmetallic sheathed cable or open wiring and boxes with a volume of less than 100 cubic inches (1639 cm^3), and multiple-gang flush-device boxes.

5.2.1 revised November 13, 2002

5.3 Boxes and covers intended for use with rigid nonmetallic conduit

5.3 revised January 31, 2005

5.3.1 The requirements in Sections 6 – 16 and 59 – 87 cover rigid nonmetallic, such as unplasticized polyvinyl chloride, boxes and covers, including blank covers.

5.3.2 Deleted November 13, 2002

5.3.3 The products covered by the requirements in Sections 6 – 16 and 59 – 87 are intended to be joined in the field to rigid nonmetallic conduit.

5.3.3 revised January 31, 2005

5.3.4 The nonmetallic products covered by the requirements in Sections 6 – 16 and 59 – 87 are considered to be inherently resistant to the corrosive influences of common industrial atmospheres including the vapors and mists of bases, hydrofluoric and chromic acids, and chromic acids, and pickling and plating baths. Resistance to specific reagents is covered in Resistance to Specific Reagents, Section 79 and in 86.3.1 and 86.3.2.

5.3.5 The outlet boxes covered by the requirements in Sections 6 – 16 and 59 – 87 have an interior volume of 100 cubic inches (1639 cm^3) or less and are intended to provide access to wiring during installation of the wiring. They are also intended to enclose splices, taps, and wiring devices, but not intended for the support of fixtures. From one to four unthreaded conduit-connection sockets are provided integrally with a PVC box, or the box is blank.

5.3.6 The conduit bodies covered by the requirements in Sections 6 – 16 and 59 – 87 are pull boxes intended for use with nonmetallic conduit to enclose splices and taps and to support wiring devices not involving the generation of heat – for example, lampholders are not acceptable – mounted on cover plates. Blank covers are to be provided with the bodies. From one to four unthreaded conduit-connections sockets are to be provided integrally with the body.

5.3.7 The flush-device boxes covered by the requirements in Sections 6 – 16 and 59 – 87 have an interior volume of 100 cubic inches (1639 cm^3) or less. Flush-device boxes made of PVC material are intended for use with nonmetallic conduit for the support of wiring devices not involving the generation of heat – for example, lampholders are not acceptable – with the wiring devices mounted directly in the box rather than on the cover but can also be used as junction and conduit bodies. Flush-device boxes may be provided with blank covers or flush-device cover plates. At least one unthreaded conduit-connection socket or knockout is provided integrally with a PVC box, or the box is blank.

5.3.8 A flush-device box that is not multi-gang, a junction box, or an outlet box, the interior of which is larger in volume than 100 cubic inches (1639 cm^3), is covered as a junction or pull box under the requirements in the Standard for Enclosures for Electrical Equipment, UL 50.

Document Was Downloaded By Rice, Shi SHIMISHENG
For Use By KUANTECH CO LTD
12039 : 8/13/2007 - 2:52 AM

UL COPYRIGHTED MATERIAL –
NOT AUTHORIZED FOR FURTHER REPRODUCTION OR
DISTRIBUTION WITHOUT PERMISSION FROM UL

Documents
Document Sharing Hub

Full document details: UL 514c 2007

5.4 Nonmetallic outlet box covers for use in damp and wet locations

5.4.1 An outlet box cover intended for use in damp or wet locations shall comply with the applicable requirements in Sections 42 – 58 when installed as intended and shall be marked in accordance with 86.4.1 – 86.4.4.

Exception No. 1: An outlet box cover intended for use in a wet location with the cover closed is not required to comply with the requirements in 50.3.1 and 50.3.3.

Exception No. 2: An outlet box cover intended for use in a damp location is not required to comply with the requirements in 50.2.1 – 50.3.3.

5.4.1 revised November 13, 2002

5.5 Boxes and covers intended for use with electrical nonmetallic tubing

5.5 added January 31, 2005

5.5.1 The products covered by the requirements in Sections 6 – 41A and 58A – 58D are boxes and covers intended for use with electrical nonmetallic tubing.

5.5.1 added January 31, 2005

6 Protection Against Corrosion

6.1 All surfaces of all attached metal parts of a box, including screws, shall be protected against corrosion unless the metal is inherently resistant to corrosion.

Exception: The cut edges, punched holes, and the threaded surfaces of tapped holes of a part formed from galvanized stock do not need additional protection.

6.2 The thickness of the coating on a screw is not specified, but the presence of a coating is to be determined by visual inspection.

6.3 The thickness of a zinc coating on the exposed surface of a permanently attached ferrous metal mounting bracket or a clamp shall not be less than specified in Table 6.1.

6.3 revised January 31, 2005

Document Was Downloaded By Rice, Shi SHIMISHENG
For Use By KUANTECH CO LTD
12039 : 8/13/2007 - 2:52 AM

UL COPYRIGHTED MATERIAL –
NOT AUTHORIZED FOR FURTHER REPRODUCTION OR
DISTRIBUTION WITHOUT PERMISSION FROM UL

Documents
Document Sharing Hub

Full document details: UL 514c 2007

Table 6.1
Thickness of coating

Material	Minimum thickness of coating inch [millimeter (mm)]			
	Intended for assembly			
	Outside of box		Inside of box	
Sheet steel	0.0005	(0.013)	0.00015	(0.0038)
Cast iron, including malleable iron	0.00015	(0.0038)	0.00015	(0.0038)

7 Assembly

7.1 Except as noted in 7.2, an assembly screw shall not have fewer than the number of threads per inch of the American National Coarse-Thread Series, in accordance with the diameter of the screw, unless it is found by investigation that the screw is not likely to abrade conductor insulation, and that the assembly is not adversely affected by vibration.

7.2 An assembly screw used to secure a cover to a box shall not have a fewer than the number of threads per inch specified in the American National Coarse-Thread Series for the diameter of the screw.

7.3 An outlet box intended to support a fixture, but not intended to support a ceiling-suspended fan, may or may not be provided with two or more steel No. 8-32 cover retaining or fixture support screws, and shall be provided with threaded or unthreaded holes for No. 8-32 screws.

Document Was Downloaded By Rice, Shi SHIMISHENG
For Use By KUANTECH CO LTD
12039 : 8/13/2007 - 2:52 AM

UL COPYRIGHTED MATERIAL –
NOT AUTHORIZED FOR FURTHER REPRODUCTION OR
DISTRIBUTION WITHOUT PERMISSION FROM UL

Documents
Document Sharing Hub

Full document details: UL 514c 2007

7.4 An outlet box intended to support a fixture, and also intended to support a ceiling-suspended fan, shall comply with Ceiling-Suspended Fan Support, Section 11.

7.5 Metal that is part of or provided with an outlet box and with which a wire or cable may make contact shall be located or protected so that contact with the part by a person or by metal outside the box will be prevented.

Exception: A grounding strap or plate may contact wires within an outlet box provided the construction complies with the requirements in 24.1.

7.6 So that contact between a supporting eyelet, nail, rivet, or screw and conductors within a box will be prevented as required by 23.3, a hole in a box that may be used for an eyelet nail, rivet, or screw shall be located in a recess, designed so that there will be a spacing of not less than 1/32 inch (0.8 mm) between the plane of the top of the recess and the head of the largest eyelet, nail, rivet, or screw that is provided with the box. If a screw or nail is not provided with the box, this spacing shall be measured:

a) Using the largest round-head screw, specified in Table 7.1, that can be inserted in a hole that is not chamfered, or

b) Using the largest flat-head screw that can be inserted in a hole that is chamfered.

Table 7.1
Supporting screw hole dimensions

Nominal screw	Maximum diameter of threads		Minimum dimensions of recess, inch (mm)			
size	inch (mm)		Diameter		Depth	
6	0.138	(3.51)	1/4	(6.4)	4/32	(3.2)
8	0.164	(4.17)	19/64	(7.5)	9/64	(3.6)
10	0.190	(4.83)	11/32	(8.7)	5/32	(4.0)
12	0.216	(5.49)	25/64	(9.9)	11/64	(4.4)

7.7 An assembly screw that can be tightened with a screwdriver is to be tightened with the torque specified in Table 7.2.

Table 7.2
Tightening torque

Nominal screw	Tightening torque	
size	pound-inch	(N·m)
6	12	(1.36)
8	20	(2.26)
10	35	(3.96)

8 Dimensions

8.1 A flush-device box shall have a minimum internal width of not less than 1-3/4 inches (44.5 mm).

Document Was Downloaded By Rong, Shi SHIMISHENG
For Use By KUANTECH CO LTD
12039 : 8/13/2007 : 9:52 AM

UL COPYRIGHTED MATERIAL –
NOT AUTHORIZED FOR FURTHER REPRODUCTION OR
DISTRIBUTION WITHOUT PERMISSION FROM UL

Documents
Document Sharing Hub

Full document details: UL 514c 2007

8.2 The volume of any box, raised cover, extension ring, or fitting that increases significantly the volume of a box assembly shall be verified as described in Volume Verification Test, Section 15, or by any equivalent means. See 86.1.5 and 86.1.7 for marking requirements.

8.3 A box provided with a partition shall have the volume of each partitioned section verified as described in Volume Verification Test, Section 15, or by any equivalent means. Each partitioned section of the box shall be marked in accordance with 86.1.5.

Effective date for 8.3 changed from February 1, 2000 to May 1, 2000

9 Device Support

9.1 Provision for supporting a device to be enclosed in a box shall be independent of the screws used to support the box.

10 Floor Boxes

10.1 If a floor box intended for installation in concrete is not obviously of such construction that the entrance of concrete into the box will be prevented, the box is to be subjected to the test described in Concrete Tightness, Section 81.

10.2 A floor box shall be subjected to the scrub-water test described in Scrub-Water Tightness of Floor Boxes, Section 16.

10.3 A floor box intended to be installed in a wood support structure or a raised floor structure shall comply with Support for Floor Boxes, Section 16B. The box shall be provided with installation instructions indicating the type of floor structure in which the box is intended to be installed.

Added 10.3 effective December 20, 2001

11 Ceiling-Suspended Fan Support

11.1 In addition to the requirements for nonmetallic outlet boxes in this Standard, an outlet box intended to support a ceiling-suspended fan shall:

a) Be provided with a minimum of two steel cover retaining or fan mounting screws and matching threaded or unthreaded holes. When other than No. 8-32 screws are provided, the box shall be marked in accordance with 86.1.12. Locking type washers or locknuts are to be utilized only when required by the installation instructions. For a screw and nut assembly, the box shall be provided with clearance holes and the screws shall be held such that they do not rotate.

b) Comply with the support tests in 29.2.1 – 29.3.5.

c) Be marked in accordance with 86.1.11 or 86.1.11A, whichever applies.

d) Be provided with installation instructions in accordance with 87.1.

Revised 11.1 effective December 20, 2001

Document Was Downloaded By Rice, Shi SHIMISHENG
For Use By KUANTECH CO LTD
12039 : 8/13/2007 - 2:52 AM

UL COPYRIGHTED MATERIAL –
NOT AUTHORIZED FOR FURTHER REPRODUCTION OR
DISTRIBUTION WITHOUT PERMISSION FROM UL

Documents
Document Sharing Hub

Full document details: UL 514c 2007

11.2 A screw intended to secure a ceiling-suspended fan mounting bracket to an outlet box (in accordance with 11.1 (a)) shall not have more than 9/16 inch (14.3 mm) of exposed screw threads when a 1/8-inch (3.2-mm) thick bracket is secured to the box.

Exception: A screw with more than 9/16 inches of exposed threads meets the intent of the requirement where a means is provided to reduce the risk of contact between the screw threads and the wire insulation.

11.2 revised December 20, 1999

12 Partitions

12.1 A partition shall fit the inside of the box in which it is intended to be used. Any openings or gaps of any length between the partition and the inside surface of the box shall not be greater than 0.080 inch (2.0 mm).

Effective date for 12.1 changed from February 1, 2000 to May 1, 2000

12.2 A polymeric material used for a partition shall have a relative thermal index of not less than 80°C (176°F) for properties of electrical and mechanical without impact determined in accordance with the Standard for Polymeric Materials – Long Term Property Evaluations, UL 746B.

12.2 revised June 4, 2001

12.3 A partition manufactured from a polymeric material shall comply with the requirements for the Flammability Test as specified in 31.1.1 – 31.1.7.

Exception: A material designated 5VA, in accordance with the Standard for Tests for Flammability of Plastic Materials for Parts in Devices and Appliances, UL 94, need not be tested.

Effective date for 12.3 changed from February 1, 2000 to May 1, 2000

12.4 A partition manufactured from a polymeric material shall comply with the requirements for the Mold Stress Test, Section 32.

Effective date for 12.4 changed from February 1, 2000 to May 1, 2000

12.5 A partition manufactured from a polymeric material shall comply with the requirements for the Water Absorption Test, Section 30.

Effective date for 12.5 changed from February 1, 2000 to May 1, 2000

12.6 A partition manufactured from a polymeric material shall not ignite within 15 seconds after application of the test current, when subjected to the Hot-Wire Ignition Test, in accordance with the Standard for Polymeric Materials – Short Term Property Evaluations, UL 746A.

Exception: A polymeric material with a Performance Level Category (PLC) of 0, 1, 2, or 3 in accordance with the Standard for Polymeric Materials – Short Term Property Evaluations, UL 746A, need not be tested.

Effective date for 12.6 changed from February 1, 2000 to May 1, 2000

Document Was Downloaded By RICE, Shi SHUMISHENG
For Use By KUANTECH CO LTD
12039 : 8/13/2007 - 2:52 AM

UL COPYRIGHTED MATERIAL –
NOT AUTHORIZED FOR FURTHER REPRODUCTION OR
DISTRIBUTION WITHOUT PERMISSION FROM UL

Documents
Document Sharing Hub

Full document details: UL 514c 2007

PERFORMANCE

13 General

13.1 Unless otherwise stated, not less than six samples of each type of box, cover, and the like are to be subjected to each test.

Exception: When a line of at least four sizes of boxes or the like, of a particular design, is being investigated, not less than three samples of each box are to be tested.

14 Protection Against Corrosion

14.1 The metallic-coating-thickness test described in 14.2 – 14.9 is to be used to determine the thickness of zinc coatings. The test is only to be conducted when a required coating thickness is specified.

14.1 revised January 31, 2005

14.2 The solution to be used for the test is to be made from distilled water and is to contain 200 grams per liter of reagent grade chromic acid (CrO_3); and 50 grams per liter of reagent grade concentrated sulfuric acid (H_2SO_4). The latter is equivalent to 27 milliliters per liter of reagent grade concentrated sulfuric acid, specific gravity 1.84, containing 96 percent of H_2SO_4.

14.3 The test solution is to be contained in a glass vessel such as a separatory funnel with the outlet equipped with a stopcock and a capillary tube having an inside bore of 0.025 inch (0.64 mm) and a length of 5.5 inches (140 mm). The lower end of the capillary tube is tapered to form a tip, the drops from which are about 0.05 milliliter each. To preserve an effectively constant level, a small glass tube is inserted in the top of the funnel through a rubber stopper and its position is to be adjusted so that, when the stopcock is open, the rate of dropping is 100 ±5 drops per minute. An additional stopcock may be used in place of the glass tube to control the rate of dropping.

14.4 The sample and the test solution are to be kept in the test room long enough to acquire the temperature of the room, which is to be noted and recorded. The test is to be conducted at a room temperature of 21 – 32°C (70 – 90°F).

14.5 Each sample is to be thoroughly cleaned before testing. All grease, lacquer, paint, and other nonmetallic coatings are to be removed completely by means of solvents. Samples are then to be thoroughly rinsed in water and dried with clean cheesecloth. Care is to be exercised to avoid contact of the cleaned surface with the hands or any foreign material.

14.6 The sample to be tested is to be supported 0.7 – 1.0 inch (18 – 25 mm) below the orifice, so that the drops of solution strike the point to be tested and run off quickly. The surface to be tested should be inclined about 45 degrees from horizontal.

14.7 After cleaning, the sample to be tested is to be put in place under the orifice. The stopcock is to be opened and the time in seconds is to be measured with a stop watch until the dropping solution dissolves off the protective metallic coating, exposing the base metal. The end point is the first appearance of the base metal recognizable by a change in color at that point.

Document Was Downloaded By Rice, Shi SHIMISHENG
For Use By KUANTECH CO LTD
12039 : 8/13/2007 - 2:52 AM

UL COPYRIGHTED MATERIAL –
NOT AUTHORIZED FOR FURTHER REPRODUCTION OR
DISTRIBUTION WITHOUT PERMISSION FROM UL

Documents
Document Sharing Hub

Full document details: UL 514c 2007

14.8 Each sample of a test lot is to be subjected to the test at three or more points, excluding cut, stenciled, and threaded surfaces, on the inside surface and at an equal number of points on the outside surface, at places where the metallic coating may be expected to be the thinnest. On parts made from precoated sheets, a bend or the like that is subjected to the greatest deformation is likely to have thin coatings.

14.9 To calculate the thickness in inches (mm) of the coating being tested, select from Table 14.1 the thickness factor appropriate for the temperature at which the test was conducted and multiply by the time in seconds required to expose the base metal as measured in 14.7.

Table 14.1
Coating thickness factors

Table 14.1 revised January 31, 2005

Temperature, Degrees		Thickness factors, 0.00001 inches (0.0003 mm) per second
F	(C)	Zinc platings
70	(21.1)	0.980
71	(21.7)	0.990
72	(22.2)	1.000
73	(22.8)	1.010
74	(23.3)	1.015
75	(23.9)	1.025
76	(24.4)	1.033
77	(25.0)	1.042
78	(25.6)	1.050
79	(26.1)	1.060
80	(26.7)	1.070
81	(27.2)	1.080
82	(27.8)	1.085
83	(28.3)	1.095
84	(28.9)	1.100
85	(29.4)	1.110
86	(30.0)	1.120
87	(30.6)	1.130
88	(31.1)	1.141
89	(31.7)	1.150
90	(32.2)	1.160

Document Was Downloaded By Rice, Shi SHIMISHENG
For Use By KUANTECH CO LTD
12039 : 8/13/2007 - 2:52 AM

UL COPYRIGHTED MATERIAL –
NOT AUTHORIZED FOR FURTHER REPRODUCTION OR
DISTRIBUTION WITHOUT PERMISSION FROM UL

Documents
Document Sharing Hub

Full document details: UL 514c 2007

15 Volume Verification Test

15.1 A box, partitioned section, raised cover, extension cover, or fitting shall hold a volume of water equal to or greater than the marked volume when tested in accordance with 15.2 – 15.5.

15.2 All separable cable clamps, associated screws, and fixture studs are to be removed. Any projections that extend outside the plane of the open face of a box, such as ears for mounting a cover or a flush device, are to be ground flush with the face of the box.

15.3 All large openings are to be closed by flat, rigid plates clamped in place across the openings. One of the plates is to contain two small holes, one for the entrance of a measuring fluid, the other for venting air.

15.4 Using modeling clay, putty, glazing compound, or similar material:

a) A hole through the side or bottom of the sample and a hole between the sample and the plate mentioned in 15.3 are to be filled flush with the inside surface.

b) An internal hub, if tapped through, is to be filled flush with the end of the hub.

c) A bushed opening is to be filled flush with the conduit stop.

15.5 Using a clean, graduated vessel – pipette or the equivalent – having a volume equal to or greater than the marked volume of the sample and containing water at room temperature, water is to be transferred to the test sample through the hole in the plate mentioned in 15.3. The results are acceptable if the test sample holds a volume of water equal to or greater than the marked volume.

16 Scrub-Water Exclusion Test

16.1.1 For the purposes of the scrub-water exclusion test described in 16.2 – 16.5, the term “joints” is used to refer to points of potential water entry and points of access to primary wiring or connections. All distances from the plane of the floor to the joints are to be measured after the box is installed as intended.

Added 16.1.1 effective January 31, 2007

16.1 A floor box is to be subjected to the applicable tests in 16.2 – 16.5. There shall be no entrance of scrub-water at the floor level into the box, through the box cover, cover flange, or other openings. Any water that enters under the cover flange, but does not enter the floor box shall not be able to contact primary live electrical parts or electrical wiring.

Exception No. 1: The tests in 16.4 and 16.5 do not apply to a raised-floor box.

Exception No. 2: The tests in 16.5 do not apply to a floor box intended for use in tile covered floors.

Exception No. 3: The tests in 16.2 – 16.5 do not apply to a floor box having all joints located 3/4 inch (19.0 mm) or more above the plane of the floor.

Revised 16.1 effective January 31, 2007

Document Was Downloaded By Rice, Shi SHIMISHENG
For Use By KUANTECH CO LTD
12039 : 8/13/2007 - 2:52 PM

UL COPYRIGHTED MATERIAL –
NOT AUTHORIZED FOR FURTHER REPRODUCTION OR
DISTRIBUTION WITHOUT PERMISSION FROM UL

Documents
Document Sharing Hub

Full document details: UL 514c 2007

16.2 A floor box intended for use only in carpet or wood covered floors and marked in accordance with 86.1.16 shall be subjected to the tests described in 16.3 and 16.5.

Revised 16.2 effective January 31, 2007

16.3 A floor box assembly is to be installed in a section of floor constructed to represent an installation as intended by the manufacturer. The cover plate is to be fully secured. Sealing compound is to be used around the perimeter of the floor box or cover flange, to retain the soap solution on the floor assembly. A minimum 1/4-inch (6.3-mm) high dam is to be constructed around the floor assembly.

16.4 A scrub-water solution is to be prepared by mixing 4 tablespoons of floor cleaning soap with 1.0 gallon (3.79 L) of water. The solution is to be poured over the cover plate of the floor box so that it collects to a depth of 1/8 inch (3.2 mm) above the plane of the floor within 10 seconds or less. The solution is to remain on the floor assembly for 1 minute. The solution is then to be removed and the interior and under the cover of the floor box is to be examined for entrance of scrub water.

Exception: If the floor box has joints located higher than 3/4 inch (19.0 mm) and additional joints located lower than 3/4 inch above the plane of the floor, then the solution is to be poured only over the joint(s) below 3/4 inch (when possible) and allowed to collect to a depth of 1/8 inch above the plane of the floor.

Revised 16.4 effective January 31, 2007

16.5 A scrub-water solution is to be prepared by mixing one tablespoon of floor cleaning soap with 1.0 quart (0.94 L) of water. The solution is to be poured over the cover plate of the floor box within 10 seconds or less. The solution is to run off the top and the sides of the cover and shall not accumulate above the plane of the floor. The cover is then to be dried. The interior and under the cover of the floor box is to be examined for entrance of scrub-water.

Revised 16.5 effective January 31, 2007

16A Floor Box and Cover Loading Test

16A.1 An access cover or receptacle cover plate intended for use with a floor box or a raised-floor box is to be subjected to the test described in 16A.4. The cover and floor box shall support the test load for one minute without deflecting more than 1/8 inch (3.2 mm). The deflection is to be measured when the force applied reaches the specified value. The permanent deformation at any point on the cover, exclusive of gasket compression, shall not exceed 1/32 inch (0.8 mm), measured 1 hour after the test load is removed. A raised-floor box shall withstand the loading without structural failure to the mounting hardware.

Added 16A.1 effective December 20, 2001

16A.2 For an access cover or receptacle cover plate, one sample is to be tested. The cover or cover plate is to be assembled to a floor box in accordance with the manufacturer's installation instructions. Appropriate wiring devices are to be installed.

Added 16A.2 effective December 20, 2001

16A.3 For a floor box, one sample of the box is to be installed in accordance with the manufacturer's installation instructions in the center of a 3/4-inch (19-mm) thick plywood sheet that is 24 inches (610 mm) longer and 24 inches (610 mm) wider than the panel opening specified by the manufacturer. The assembly is to be supported on each side so that the box hangs freely beneath the panel, as shown in Figure 16A.1. The supports are to be placed 6 inches (152 mm) from the outermost edge of the cover flange of the box.

Added 16A.3 effective December 20, 2001

Document Was Downloaded By Rice, SHI SHUMISHENG
For Use By KONTECH CO LTD
12039 : 8/13/2007 : 2:52 AM

UL COPYRIGHTED MATERIAL –
NOT AUTHORIZED FOR FURTHER REPRODUCTION OR
DISTRIBUTION WITHOUT PERMISSION FROM UL

Documents
Document Sharing Hub

Full document details: UL 514c 2007

Figure 16A.1
Floor box assembly

Added Figure 16A.1 effective December 20, 2001

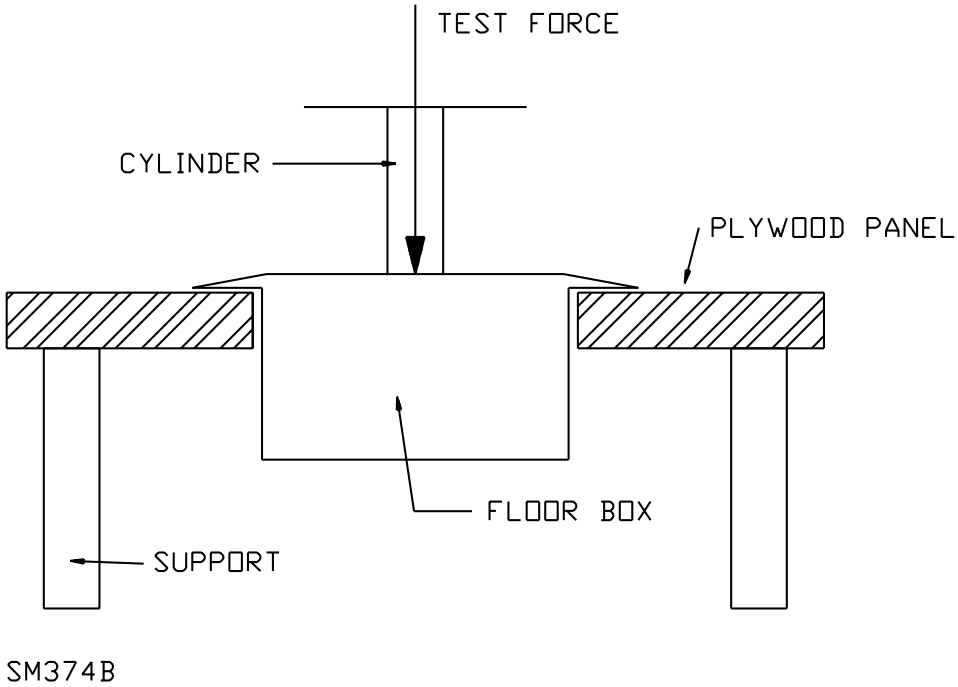

16A.4 The assembly described in 16A.2 and 16A.3 is to be subjected to the application of a load by means of a weight that exerts a force of 300 pounds (1334 N) through the flat end of a solid, right circular cylinder, 3 inches (76 mm) in diameter and a minimum of 1 inch (25 mm) long, as shown in Figure 16A.1. The force is to be applied to the cover at the point resulting in maximum deflection.

Added 16A.4 effective December 20, 2001

16B Support for Floor Boxes

16B.1 A floor box is be subjected to the test described in 16B.2 and 16B.3. The support means, such as clamps, clips, or similar components, shall not break or result in the displacement of the box more than 1/8 inch (3.2 mm) from the plane of the surface of the floor when measured 1 minute after the test load is removed.

Added 16B.1 effective December 20, 2001

16B.2 Six floor boxes are to be installed on at a time in a 3/4-inch (19-mm) thick plywood sheet. The plywood is to be mounted on supports spaced 16 inches on center with the box mounted in the middle of the supports. Screws for the support means that are larger than No. 8 are to be tightened with a torque of 35 pound-inches (3.96 N·m). A No. 8 screw is to be tightened with a torque of 20 pound-inches (2.26 N·m). A No. 6 screw is to be tightened with a torque of 12 pound-inches (1.36 N·m). See 29.4.3.

Added 16B.2 effective December 20, 2001

Document Was Downloaded By Rice, Shi SHIMISHENG
For Use By KUANTIAN CO LTD
12039 : 8/13/2007 - 2:52 AM

UL COPYRIGHTED MATERIAL –
NOT AUTHORIZED FOR FURTHER REPRODUCTION OR
DISTRIBUTION WITHOUT PERMISSION FROM UL

Documents
Document Sharing Hub

Full document details: UL 514c 2007

16B.3 After installation as specified in 16B.2, a force of 50 pounds (222 N) is to be applied for 5 minutes consecutively to each of three boxes in a direction normal to the plane of the face of the plywood sheet along the center line of the box, and tending to push the box into the opening. The same force is to be applied to each of the remaining three boxes in a direction tending to pull the box out of the opening. See 29.4.3.

Added 16B.3 effective December 20, 2001

BOXES INTENDED FOR USE WITH NONMETALLIC-SHEATHED CABLE OR OPEN WIRING

CONSTRUCTION

17 Materials

17.1 A material used for a box that has not been investigated for the application shall be investigated for combustibility, aging characteristics, temperature stability, resistance to ignition, dielectric strength, and physical strength.

17.1 revised November 13, 2002

17.2 Deleted November 13, 2002

17.2A A material that is used for a box not intended for the support of a fixture, or for a box intended to support a fixture weighing 49 lbs (22.2 kg) or less and marked for use in a wall, shall have a relative thermal index of not less than 80°C (176°F) for properties of electrical and mechanical without impact. See 86.1.9.

Revised 17.2A effective December 20, 2001

Document Was Downloaded By Rice, Shi SHIMISHENG
For Use By KUANTECH CO LTD
12039 : 8/13/2007 - 2:52 AM

UL COPYRIGHTED MATERIAL –
NOT AUTHORIZED FOR FURTHER REPRODUCTION OR
DISTRIBUTION WITHOUT PERMISSION FROM UL

Documents
Document Sharing Hub

Full document details: UL 514c 2007

No Text on This Page

Document Was Downloaded By Rice, Shi SHIMISHENG
For Use By KUANTECH CO LTD
12039 : 8/13/2007 - 2:52 AM

UL COPYRIGHTED MATERIAL –
NOT AUTHORIZED FOR FURTHER REPRODUCTION OR
DISTRIBUTION WITHOUT PERMISSION FROM UL

Documents
Document Sharing Hub

Full document details: UL 514c 2007

17.3 A material that is used for a box marked “For Fixture Support” or the equivalent, or for a box intended to support a fixture weighing 49 lbs or less marked for use in a ceiling, shall have a relative thermal index of not less than 90°C (194°F) for properties of electrical and mechanical without impact. See 86.1.9.

Revised 17.3 effective December 20, 2001

17.4 The relative thermal index specified in 17.2A, 17.3, 37.2.1, and 44.1 is to be determined in accordance with the Standard for Polymeric Materials – Long Term Property Evaluations, UL 746B.

17.4 revised November 13, 2002

PERFORMANCE

18 Hot-Wire Ignition

18.1 When tested as described in 18.2, a polymeric material used for a box shall not ignite within 15 seconds after the application of the test current.

Exception: A material that has been previously investigated and found to be rated for the application is not required to be tested.

18.1 revised November 13, 2002

18.2 To determine whether a material complies with the requirement in 18.1, three 1/2-inch (12.7 mm) by 5-inch (127-mm) specimens of polymeric material in sheet form having a thickness of not more than the minimum thickness used for the box are to be tested in accordance with the requirements for hot-wire ignition described in the Standard for Polymeric Materials – Short Term Property Evaluations, UL 746A.

18.2 revised November 13, 2002

19 Dielectric Voltage Withstand

19.1 The molded material used for a box shall withstand for 1 minute without breakdown the application of a 60-hertz, essentially sinusoidal potential of 2500 volts when tested as described in 19.2.

Exception: A box made of a molded material that has been previously investigated and found to be rated for the application.

19.1 revised November 13, 2002

19.2 To determine whether a box complies with the requirement in 19.1, sample boxes are to be tested by applying the test potential across the thinnest section of the box, excluding knockouts. Each box is then to be conditioned for 24 hours in moist air having a relative humidity of 85 ±5 percent at a temperature of 32 ±2°C (90 ±4°F). Following this conditioning, each box is again to be subjected to the specified test potential.

19.2 revised November 13, 2002

Document Was Downloaded By Rice, Shi-SHUMISHENG
For Use By KUANTECH CO LTD
12039 : 8/13/2007 - 2:52 AM

UL COPYRIGHTED MATERIAL –
NOT AUTHORIZED FOR FURTHER REPRODUCTION OR
DISTRIBUTION WITHOUT PERMISSION FROM UL

Documents
Document Sharing Hub

Full document details: UL 514c 2007

BOXES INTENDED FOR USE WITH NONMETALLIC-SHEATHED CABLE OR OPEN WIRING

CONSTRUCTION

20 Knockouts

20.1 A knockout shall completely cover the opening in which it is located, and the clearance between the knockout and the opening shall not be more than 0.030 inch (0.76 mm).

20.2 The maximum dimension of a knockout intended for use with a nonmetallic fixture stud shall not exceed 27/32 inch (21.4 mm).

20.3 The dimensions of a knockout intended for use with nonmetallic-sheathed cable shall not be more than:

a) 0.500 inch (12.70 mm) by 0.625 inch (15.90 mm) for a single-stage cable knockout, and

b) 0.500 by 0.625 inch for the first stage of a multi-stage knockout and 0.625 by 0.844 inch (21.44 mm) for the second stage. See 26.4.

Exception: A box intended for use with nonmetallic-sheathed cable and either provided with or having provision for a separable cable clamp may have a single-stage knockout that does not exceed 0.625 by 0.844 inch.

21 Connections for Wiring Systems

21.1 A box shall be provided with means for connection to a wiring system.

21.2 A box intended for use with open wiring or concealed knob and tube wiring shall have provisions for the separate entry of each conductor through a hole.

21.3 Each box shall be provided with a number of means for securing open wiring, concealed knob and tube wiring, and nonmetallic - sheathed cables entering the box. This number shall be consistent with the box volume but need not exceed the number of knockouts in the box. See 21.4.

Exception: A box nominally 2-1/4 by 4 inches or smaller (single-gang) need not be provided with a means for securing nonmetallic-sheathed cable. A round or octagonal box is not considered to be such a box.

21.4 To determine the minimum number of wiring and cable securing means that shall be provided with a box, the following method shall be used:

a) For a securing means intended for use with open wiring or concealed knob and tube wiring, the number shall be calculated from the formula:

Document Was Downloaded By Nice, Shi SHIMISHENG
For Use By KUANTECH CO LTD
12039 : 8/13/2007 - 2:52 AM

UL COPYRIGHTED MATERIAL –
NOT AUTHORIZED FOR FURTHER REPRODUCTION OR
DISTRIBUTION WITHOUT PERMISSION FROM UL

Documents
Document Sharing Hub

Full document details: UL 514c 2007

$$C = \frac{V}{2} - 1$$

in which:

C is the number of securing means, and

V is the marked volume of the box. A further subtraction of 1 is acceptable for each device intended to be fastened to the box.

b) For a securing means that is acceptable only for nonmetallic-sheathed cable, dividing the number calculated in accordance with (a) by 2 is acceptable. See 21.5.

21.5 The result calculated as described in 21.4(a) and (b) shall be rounded, if necessary, to the nearest integer.

21.6 The securing means required by 21.3 shall be integral with, fastened to, or packed securely inside each box.

Exception: A securing means may be separate from a box provided the number of means required for each box is included in the smallest unit carton in which the box is shipped, and both the box and the means are marked in accordance with 86.2.2 and 86.2.3, respectively.

22 Clamps for Nonmetallic-Sheathed Cable

22.1 A clamp provided in a box and intended for securing nonmetallic-sheathed cable shall substantially close the opening in the box surrounding the cable.

22.2 A clamp provided as part of a box and intended for use with nonmetallic-sheathed cable shall secure cable ranging in size from No. 14 AWG (2.1 mm^2), two-wire cable with an uninsulated grounding wire to the largest oval or round multiconductor cable that can be accommodated by the clamp unless the clamp is marked to indicate its use with other cable sizes. See 27.1, 86.2.4, and 86.2.5.

Document Was Downloaded By Rice, Shi SHIMISHENG
For Use By KUANTECH CO LTD
12039 : 8/13/2007 - 2:52 AM

UL COPYRIGHTED MATERIAL –
NOT AUTHORIZED FOR FURTHER REPRODUCTION OR
DISTRIBUTION WITHOUT PERMISSION FROM UL

Documents
Document Sharing Hub

Full document details: UL 514c 2007

23 Supports

23.1 A box shall be provided with means for support so that it can be securely fastened in place without depending upon the support furnished by any wiring system.

23.2 Sheet-steel end-supporting ears furnished with a box shall not be less than 0.036 inch (0.91 mm) thick if formed from uncoated stock, and not less than 0.039 inch (0.99 mm) thick if formed from galvanized stock. The ears shall be attached to the box and prevented from turning relative to the box.

23.3 Provision for support or other mounting means shall be outside the box, unless the box is constructed so that the conductors within the box cannot contact supporting screws.

23.4 A molded, threaded boss intended for support of a fixture shall not be recessed more than 1/8 inch (3.2 mm) from the plane of the open face of the box. See 29.2.5– 29.4.1.

23.5 The supporting means of a box intended to be installed in a finished structure shall comply with the requirements in 29.4.1 and 29.4.4. Where the supporting means is constructed of a polymeric material, the supporting means shall also comply with Polymeric Supporting Means, Section 29.5.

Effective date for 23.5 changed from December 20, 2001 to May 1, 2000

23.6 An outlet box intended for fixture support, intended to be installed in an unfinished construction, and marked in accordance with 86.1.8 shall comply with Fixture Support, Section 29.2.

23.6 added December 20, 1999

23.7 A box intended to be installed in a finished structure or unfinished construction and marked for support of a product weighing more than 6 pounds (2.7 kg) and 15 pounds (6.8 kg) or less shall comply with 23.9.

Added 23.7 effective December 20, 2001

23.8 A box intended to be installed in a finished structure or unfinished construction and marked for support of a product weighing more than 15 pounds (6.8 kg) and 49 pounds (22.2 kg) or less shall comply with 23.10, and be provided with installation instructions in accordance with 87.3.

Added 23.8 effective December 20, 2001

23.9 A box marked for use in a wall in accordance with 86.1.14 shall comply with 29.4.1 – 29.4A.2. An outlet box marked for use in a ceiling in accordance with 86.1.14 shall comply with 29.4A.3 and 29.4A.4. An outlet box marked for use in a wall and ceiling in accordance with 86.1.14 shall comply with 29.4.1 – 29.4A.4.

Exception: A box for use in unfinished construction is not required to comply with 29.4.1 – 29.4.4.

Revised 23.9 effective December 20, 2001

23.10 A box marked for use in a wall in accordance with 86.1.15 shall comply with 29.4.1 – 29.4A.2. An outlet box marked for use in a ceiling in accordance with 86.1.15 shall comply with 29.4A.3 and 29.4A.4. An outlet box marked for use in a wall and ceiling in accordance with 86.1.15 shall comply with 29.4.1 – 29.4A.4.

Exception: A box for use in unfinished construction is not required to comply with 29.4.1 – 29.4.4.

Revised 23.10 effective December 20, 2001

Document Was Downloaded By Rice, Shi SHIMISHENG
For Use By KUANTECH CO LTD
12039 : 8/13/2007 - 2:12 AM

UL COPYRIGHTED MATERIAL –
NOT AUTHORIZED FOR FURTHER REPRODUCTION OR
DISTRIBUTION WITHOUT PERMISSION FROM UL

Documents
Document Sharing Hub

Full document details: UL 514c 2007

24 Grounding

24.1 A metal strap or plate provided in a box and intended for connection of a grounding conductor shall be provided with one or more grounding screws. The strap or plate shall provide a continuous conductive path from each screw to the mounting yokes or straps of all devices that may be mounted in the box.

24.2 A grounding screw provided in a box shall be No. 8-32 or larger, have a green-colored head that is slotted or hexagonal, or both, and be plated steel, stainless steel, copper, or copper alloy. A grounding screw shall engage at least two full threads and shall be used in conjunction with upturned lugs, a cupped washer, or an equivalent method that is capable of retaining a No. 10 AWG conductor under the head of the screw.

25 Extension Rings

25.1 An extension ring shall fit closely with a box of the type and size with which it is intended to be used.

25.2 An extension ring manufactured from a polymeric material shall comply with the following:

a) The relative thermal index in accordance with 17.2 and 17.4,

b) Hot-Wire Ignition, Section 18,

c) Dielectric Voltage Withstand, Section 19,

d) Water Absorption, Section 30,

e) Flammability, Section 31,

f) Mold Stress, Section 32,

g) Resistance to Crushing, Section 33, and

h) The Impact Test described in 34.1 and 34.2.

25.2 added November 13, 2002

Document Was Downloaded By Rice, Shi SHIMISHENG
For Use By KUANTECH CO LTD
12039 : 8/13/2007 - 2:52 AM

UL COPYRIGHTED MATERIAL –
NOT AUTHORIZED FOR FURTHER REPRODUCTION OR
DISTRIBUTION WITHOUT PERMISSION FROM UL

Documents
Document Sharing Hub

Full document details: UL 514c 2007