UL 541

STANDARD FOR SAFETY

Refrigerated Vending Machines

Documents
Document Sharing Hub

Copyright UL
Provided by IHS under license with UL
No reproduction or networking permitted without license from IHS
Full document details: UL 541 2011

Licensee=North Carolina State Univ/5618801100
Not for Resale, 07/06/2013 19:32:09 MDT

UL COPYRIGHTED MATERIAL –
NOT AUTHORIZED FOR FURTHER REPRODUCTION OR
DISTRIBUTION WITHOUT PERMISSION FROM UL

Documents
Document Sharing Hub

Copyright UL
Provided by IHS under license with UL
No reproduction or networking permitted without license from IHS
Full document details: UL 541 2011

Licensee=North Carolina State Univ/5618801100
Not for Resale, 07/06/2013 19:32:09 MDT

UL Standard for Safety for Refrigerated Vending Machines, UL 541

Seventh Edition, Dated December 30, 2011

Summary Of Topics

The eighth edition incorporates the following changes to requirements and reflects the December 30, 2011 ANSI recognition of the Standard.

1. Relocation Of General Component Requirements To The Construction Section And Addition of Glossary Terms

2. Addition And Revision Of Requirements To Relocate Component Standard References From Appendix A Into The Body Of The Standard As Component Requirements

3. Addition Of Definition As Well As Clarifying The Requirements For Barriers And Aligning Them With Similar Barrier Requirements In Other UL Standards

4. Revision And Addition Of Requirements For Gaskets Intended To Clarify Requirements And Allow An Option For Gaskets To Comply With The Standard For Gaskets And Seals, UL 157

5. Reorganization And Clarification Of Supply Connection Requirements

6. Revision To Allow An Option For Capacitors To Comply With The Standard For Capacitors, UL 810

7. Addition And Revision Of Lighting-System Requirements To Provide For Lighting Systems Other Than Electric-Discharge Systems

8. Revisions To Protective Electronic Circuits Requirements With Respect To Clarifying Software Class Requirements

9. Revision And Addition Of Requirements For Switches And Controllers To Specify Component Requirements

10. Clarifications and Revisions To Requirements For Transformers To Integrate Applicable Component Requirements

11. Addition Of Requirements To Provide An Alternative Means For Complying With Present Spacing Requirements Based On The Standard For Insulation Coordination Including Clearances And Creepage Distances For Electrical Equipment, UL 840

12. Revision And Addition Of Requirements For Carbonation Systems To Clarify The Requirements And Align Them With Similar Requirements In Other UL Standards

13. Revision And Addition Of Requirements For Refrigerant Tubing And Clarifying Requirements Specific To Capillary Tubing

14. Revision And Addition Of Requirements To Reference The Fatigue Test In UL 207 To Be Used In Conjunction With The Strength Tests When Applicable To The Evaluation Of Vending Machines

UL COPYRIGHTED MATERIAL –
NOT AUTHORIZED FOR FURTHER REPRODUCTION OR
DISTRIBUTION WITHOUT PERMISSION FROM UL

Documents
Document Sharing Hub

Copyright UL
Provided by IHS under license with UL
No reproduction or networking permitted without license from IHS
Full document details: UL 541 2011

Licensee=North Carolina State Univ/5618801100
Not for Resale, 07/06/2013 19:32:09 MDT

15. Revisions To The Heating Test Requirements To Align With Additional Heating Requirements Proposed In Topic 2 And Changes To Lighting System Requirements Proposed In Topic 7

16. Relocation And Clarification Of Strain Relief Test Requirements For Cords For Cord-Connected Vending Machines

17. Relocation And Clarification Of Wiring Endurance Test Requirements

18. Addition And Revision Of Requirements Specific To Polymeric Parts Of Vending Machines To Align With Requirements In The Standard For Polymeric Materials – Use in Electrical Equipment Evaluations, UL 746C

19. Addition And Revision Of Requirements To Address The Investigation Of Vending Machines Using Flammable Refrigerants

20. Addition And Revision Of Requirements To Address The Investigation Of Vending Machines Using Solar Photovoltaic (PV) Systems

21. Addition Of Requirements To Address The Investigation Of Vending Machines Using Thermoelectric Chilling System Technology

22. Editorial Revisions

A reference to UL 60730-1 and/or a Part 2 standard from that series has been added to this standard. The addition of this reference provides an alternate standard for investigating components currently covered by UL 873 or UL 244A until October 19, 2016. This added reference will facilitate the use of components that have been investigated to the UL 60730 series. Such components have been determined to fulfill the requirements of the legacy standards.

UL 60730-1 (4th Edition) becomes effective on October 19, 2016. All components that were previously investigated to the requirements in UL 873 or UL 244A will have to comply with the requirements in either UL 60730-1 and/or a Part 2 standard from that series in order to maintain UL Listing or Recognition, as appropriate. UL 873 and UL 244A legacy controls standards will be withdrawn on October 19, 2016.

This is intended to provide end product manufacturers with sufficient time to a) address the impact of the standards changes during normal design changes over the intervening years, b) submit any modified products for investigation, and c) implement any necessary changes in production.

The new requirements are substantially in accordance with Proposal(s) on this subject dated August 12, 2011 and October 21, 2011.

All rights reserved. No part of this publication may be reproduced, stored in a retrieval system, or transmitted in any form by any means, electronic, mechanical photocopying, recording, or otherwise without prior permission of UL.

UL provides this Standard ″as is″ without warranty of any kind, either expressed or implied, including but not limited to, the implied warranties of merchantability or fitness for any purpose.

UL COPYRIGHTED MATERIAL –
NOT AUTHORIZED FOR FURTHER REPRODUCTION OR
DISTRIBUTION WITHOUT PERMISSION FROM UL

Documents
Document Sharing Hub

Copyright UL
Provided by IHS under license with UL
No reproduction or networking permitted without license from IHS
Full document details: UL 541 2011

Licensee=North Carolina State Univ/5618801100
Not for Resale, 07/06/2013 19:32:09 MDT

In no event will UL be liable for any special, incidental, consequential, indirect or similar damages, including loss of profits, lost savings, loss of data, or any other damages arising out of the use of or the inability to use this Standard, even if UL or an authorized UL representative has been advised of the possibility of such damage. In no event shall UL's liability for any damage ever exceed the price paid for this Standard, regardless of the form of the claim.

Users of the electronic versions of UL's Standards for Safety agree to defend, indemnify, and hold UL harmless from and against any loss, expense, liability, damage, claim, or judgment (including reasonable attorney's fees) resulting from any error or deviation introduced while purchaser is storing an electronic Standard on the purchaser's computer system.

The requirements in this Standard are now in effect, except for those paragraphs, sections, tables, figures, and/or other elements of the Standard having future effective dates as indicated in the note following the affected item. The prior text for requirements that have been revised and that have a future effective date are located after the Standard, and are preceded by a ″SUPERSEDED REQUIREMENTS″ notice.

The following table lists the future effective dates with the corresponding reference.

Future Effective Date	Reference
January 24, 2014	Paragraph 15.1

UL COPYRIGHTED MATERIAL –
NOT AUTHORIZED FOR FURTHER REPRODUCTION OR
DISTRIBUTION WITHOUT PERMISSION FROM UL

Documents
Document Sharing Hub

Copyright UL
Provided by IHS under license with UL
No reproduction or networking permitted without license from IHS
Full document details: UL 541 2011

Licensee=North Carolina State Univ/5618801100
Not for Resale, 07/06/2013 19:32:09 MDT

No Text on This Page

UL COPYRIGHTED MATERIAL –
NOT AUTHORIZED FOR FURTHER REPRODUCTION OR
DISTRIBUTION WITHOUT PERMISSION FROM UL

Documents
Document Sharing Hub

Copyright UL
Provided by IHS under license with UL
No reproduction or networking permitted without license from IHS
Full document details: UL 541 2011

Licensee=North Carolina State Univ/5618801100
Not for Resale, 07/06/2013 19:32:09 MDT

UL 541

Standard for Refrigerated Vending Machines

First Edition – August, 1958
Second Edition – February, 1970
Third Edition – March, 1974
Fourth Edition – July, 1979
Fifth Edition – February, 1989
Sixth Edition – July, 1995
Seventh Edition – February, 2010

Eighth Edition

December 30, 2011

This ANSI/UL Standard for Safety consists of the Eighth edition.

The most recent designation of ANSI/UL 541 as an American National Standard (ANSI) occurred on December 30, 2011. ANSI approval for a standard does not include the Cover Page, Transmittal Pages, Title Page, or effective date information.

Comments or proposals for revisions on any part of the Standard may be submitted to UL at any time. Proposals should be submitted via a Proposal Request in UL's On-Line Collaborative Standards Development System (CSDS) at http://csds.ul.com.

UL's Standards for Safety are copyrighted by UL. Neither a printed nor electronic copy of a Standard should be altered in any way. All of UL's Standards and all copyrights, ownerships, and rights regarding those Standards shall remain the sole and exclusive property of UL.

COPYRIGHT © 2011 UNDERWRITERS LABORATORIES INC.

UL COPYRIGHTED MATERIAL –
NOT AUTHORIZED FOR FURTHER REPRODUCTION OR
DISTRIBUTION WITHOUT PERMISSION FROM UL

Documents
Document Sharing Hub

Copyright UL
Provided by IHS under license with UL
No reproduction or networking permitted without license from IHS
Full document details: UL 541 2011

Licensee=North Carolina State Univ/5618801100
Not for Resale, 07/06/2013 19:32:09 MDT

No Text on This Page

UL COPYRIGHTED MATERIAL –
NOT AUTHORIZED FOR FURTHER REPRODUCTION OR
DISTRIBUTION WITHOUT PERMISSION FROM UL

Documents
Document Sharing Hub

Copyright UL
Provided by IHS under license with UL
No reproduction or networking permitted without license from IHS
Full document details: UL 541 2011

Licensee=North Carolina State Univ/5618801100
Not for Resale, 07/06/2013 19:32:09 MDT

CONTENTS

INTRODUCTION

1 Scope 8
2 Units of measurement 8
3 Terminology 8
4 Undated references 9
5 Glossary 9

CONSTRUCTION

6 General 11
7 Nonmetallic Parts 14
8 Nonmetallic Materials 14
9 Nonmetallic Material Ignition Sources Separation 14
10 Nonmetallic Material Application and Location 16
11 Barriers 16
12 Accessories 16
13 Enclosures 17
13.1 General 17
13.2 Protection against corrosion 19
13.3 Electrical enclosures 21
13.4 Protection from risk of injury 27
14 Supply Connections for Permanently Connected Venders 28
14.1 General 28
14.2 Terminals 29
14.3 Leads 30
15 Supply Connections for Cord Connected Venders 30
16 Grounding and Bonding for Grounding 33
16.1 General 33
16.2 Cord connected venders 35
16.3 Permanently connected venders 35
17 Internal Wiring and Wiring Methods 36
17.1 General 36
17.2 Splices 39
17.3 Printed wiring boards 40
18 Separation of Circuits 40

ELECTRICAL COMPONENTS

19 Current-Carrying Parts 40
20 Insulating Material 41
21 Capacitors 41
22 Control Circuit Conductor Overcurrent Protection 42
22.1 Glossary 42
22.2 Tapped high-voltage control circuits 42
23 Short-Circuit Protection 44
24 Dispenser Mechanism 44
25 Coin or Credit Mechanism 44
26 Lighting Systems 45
26.1 General 45

UL COPYRIGHTED MATERIAL –
NOT AUTHORIZED FOR FURTHER REPRODUCTION OR
DISTRIBUTION WITHOUT PERMISSION FROM UL
Documents
Document Sharing Hub

Copyright UL
Provided by IHS under license with UL
No reproduction or networking permitted without license from IHS
Full document details: UL 541 2011
Licensee=North Carolina State Univ/5618801100
Not for Resale, 07/06/2013 19:32:09 MDT

26.2 Electric-discharge lighting systems 45
27 Fuseholders 47
28 Motors 47
29 Motor Overload Protection 50
29.1 General 50
29.2 Protection of single-phase nonhermetic motors 50
29.3 Protection of single-phase hermetic refrigerant motor-compressors 51
29.4 Protection of three-phase motors 52
29.5 Protective electronic circuits 52
30 Switches and Controllers 53
30.1 General 53
30.2 Relays 56
31 Transformer Protection 56
31.1 High-voltage transformers 56
31.2 Overcurrent protective devices 59
32 Valves and Solenoids 59
33 Batteries and Battery Chargers 59
34 Circuit Breakers, Fusing Resistors and Supplementary Protectors 60
35 Connectors 60
36 Electrical Cable, Conduit and Tubing 60
37 Electrical Insulation Systems 61
38 Electromagnetic Interference Filters 61
39 Fuses 61
40 Heaters 62
41 Optical Isolators and Semiconductor Devices 62
42 Outlet Boxes 62
43 Power Supplies 62
44 Receptacles 63
45 Terminal Blocks 63
46 Wireways, Auxiliary Gutters and Associated Fittings 63
47 Solar Photovoltaic Systems 64
48 Information Technology Equipment 65
49 Across-The-Line Capacitors, Antenna-Coupling Components, Line-Bypass Components and Fixed Capacitors for Use in Electronic Equipment 65

SPACINGS

50 High-Voltage Circuits 65
51 Low-Voltage Circuits 67
52 Alternate Spacings – Clearances and Creepage Distances 68

CARBONATION SYSTEM

53 General 69

PRODUCT LINES

54 General 69
55 Thermoelectric Refrigerated Venders 69

UL COPYRIGHTED MATERIAL –
NOT AUTHORIZED FOR FURTHER REPRODUCTION OR
DISTRIBUTION WITHOUT PERMISSION FROM UL

Documents
Document Sharing Hub

Copyright UL
Provided by IHS under license with UL
No reproduction or networking permitted without license from IHS
Full document details: UL 541 2011

Licensee=North Carolina State Univ/5618801100
Not for Resale, 07/06/2013 19:32:09 MDT

REFRIGERATION SYSTEM

56 Refrigerant 70
57 Refrigerant-Containing Parts 70
57.1 General 70
57.2 Refrigerant tubing and fittings 71
58 Pressure Limiting Devices 72
59 Pressure Relief 73
59.1 General 73
59.2 Relief valves 73
59.3 Fusible plugs or rupture members 74

PERFORMANCE

60 General 74
60.1 Test voltages 74
60.2 Temperature measurements 75
60.3 Pressure measurements 75
61 Leakage Current Test 76
62 Input Test 78
63 Temperature and Pressure Tests 79
63.1 General 79
63.2 Automatic venders 82
64 Dielectric Voltage-Withstand Test 83
65 Heating Test 84
66 Insulation Resistance Test 84
67 Rain Test 85
68 Stability Test 88
69 Condenser Fan Motor Failure Test 89
70 Antitheft Device Test 90
71 Water Failure Test 90
72 Start-To-Discharge Test 90
73 Rupture Member Test 91
74 Fusible Plug Test 91
75 Overload and Endurance Test – Switching Devices 91
76 Burnout Tests – Components 92
76.1 General 92
76.2 Electrically operated valves 93
76.3 Liquid-level system 93
77 Burnout Test – High-Voltage Transformers 93
78 Abnormal Tests – Thermoelectric Refrigerated Venders 94
78.1 General 94
78.2 Thermoelectric venders without cooling fans 95
78.3 Thermoelectric venders with cooling fans 95
78.4 Thermoelectric circuits powered by other than an extra-low-voltage circuit 95
78.5 Dielectric-Voltage Withstand – 5000 Volt Test 95
79 Overload Test – High-Voltage Transformers 96
80 Overvoltage and Undervoltage Tests 96
81 Limited Short-Circuit Test 97
81.1 General 97
81.2 Motor Overload Protective Devices 98
81.3 Bonding conductors and connections 99
81.4 Motor circuit conductors and connections 99

UL COPYRIGHTED MATERIAL –
NOT AUTHORIZED FOR FURTHER REPRODUCTION OR
DISTRIBUTION WITHOUT PERMISSION FROM UL

Documents
Document Sharing Hub

Copyright UL
Provided by IHS under license with UL
No reproduction or networking permitted without license from IHS
Full document details: UL 541 2011

Licensee=North Carolina State Univ/5618801100
Not for Resale, 07/06/2013 19:32:09 MDT

82 Protective Devices – Maximum Continuous Current Test 99
83 Strength Tests 101
84 Glass Strength Test 103
84.1 Impact test 103
84.2 Mechanical pressure test 104
85 Glass Component Strength Test 104
86 Strain Relief Test 104
87 Push-Back Strain-Relief Test 105
88 Wiring Endurance Test 105
89 Accelerated Aging Tests on Gaskets and Adhesives 106
90 Metallic Coating Thickness Test 107
91 Label Adhesion Tests 108
91.1 General 108
91.2 Oven-aging test 109
91.3 Immersion test 109
91.4 Standard atmosphere test 109
91.5 Unusual condition exposure test 110
92 Tests on Nonmetallic Materials 110
93 Fastener Strength Test 111

MANUFACTURING AND PRODUCTION TESTS

94 Pressure Tests 112
95 Production Fatigue Test 112
96 Grounding Continuity Tests 112
97 Dielectric Voltage-Withstand Tests 113

MARKING

98 General 115
99 Electrical Ratings 118
100 Coin and Credit Mechanism 123
101 Accessories 124
102 Installation Instructions 124

SUPPLEMENT SA - REQUIREMENTS FOR REFRIGERATED VENDERS EMPLOYING A FLAMMABLE REFRIGERANT IN THE REFRIGERATING SYSTEM

SA1 Scope SA1
SA2 Definitions SA1
SA3 General SA2
SA4 Construction SA2
SA4.1 General SA2
SA4.2 Tubing and fittings SA3
SA5 Performance SA3
SA5.1 Leakage test SA3
SA5.2 Ignition test SA6
SA5.3 Temperature test SA7
SA5.4 Scratch test SA7
SA6 Marking, Installation and Operating Instructions SA9
SA6.1 Marking SA9

UL COPYRIGHTED MATERIAL –
NOT AUTHORIZED FOR FURTHER REPRODUCTION OR
DISTRIBUTION WITHOUT PERMISSION FROM UL
Documents
Document Sharing Hub

Copyright UL
Provided by IHS under license with UL
No reproduction or networking permitted without license from IHS
Full document details: UL 541 2011
Licensee=North Carolina State Univ/5618801100
Not for Resale, 07/06/2013 19:32:09 MDT

SA6.2 Installation and operating instructions SA10

UL COPYRIGHTED MATERIAL –
NOT AUTHORIZED FOR FURTHER REPRODUCTION OR
DISTRIBUTION WITHOUT PERMISSION FROM UL

Documents
Document Sharing Hub

Copyright UL
Provided by IHS under license with UL
No reproduction or networking permitted without license from IHS
Full document details: UL 541 2011

Licensee=North Carolina State Univ/5618801100
Not for Resale, 07/06/2013 19:32:09 MDT

INTRODUCTION

1 Scope

1.1 These requirements cover self-contained, refrigerated vending machines intended for connection to alternating-current circuits rated 600 volts or less in accordance with the National Electrical Code, ANSI/NFPA 70. Venders machines covered by these requirements:

a) Incorporate refrigeration systems of the air-cooled or water-cooled type employing hermetic refrigerant motor-compressors;

b) May be battery operated;

c) May employ flammable refrigerant as defined in Requirements for Refrigerated Venders Employing a Flammable Refrigerant in the Refrigerating System, Supplement SA;

d) May employ thermoelectric chilling systems.

1.2 These requirements do not cover vending machines incorporating universal motors rated at more than 250 volts, nor vending machines which have a principal function other than storage and dispensing of refrigerated products; nor to vending stations, that is, freestanding stationary structures for outdoor use.

2 Units of measurement

2.1 Values stated without parentheses are the requirement. Values in parentheses are explanatory or approximate information.

3 Terminology

3.1 The term ″product,″ as used in this standard, refers to the refrigerated product as stored or dispensed by the vender.

3.2 The term ″vender,″ as used in this standard, and as defined in 5.31, refers to a refrigerated vending machine or part thereof covered by this standard unless specifically noted otherwise.

UL COPYRIGHTED MATERIAL –
NOT AUTHORIZED FOR FURTHER REPRODUCTION OR
DISTRIBUTION WITHOUT PERMISSION FROM UL

Documents
Document Sharing Hub

Copyright UL
Provided by IHS under license with UL
No reproduction or networking permitted without license from IHS
Full document details: UL 541 2011

Licensee=North Carolina State Univ/5618801100
Not for Resale, 07/06/2013 19:32:09 MDT

4 Undated references

4.1 Any undated reference to a code or standard appearing in the requirements of this standard shall be interpreted as referring to the latest edition of that code or standard.

5 Glossary

5.1 For the purpose of this standard, the following definitions apply.

5.2 ACCESSORY – A device or component intended for installation in or connection to a vender for the purpose of modifying or supplementing the functions of the vender. It is intended for installation by the serviceman or another equally qualified person in the field. An accessory may be dependent upon the vender for electrical power, signaling, switching, or the like.

5.3 AUTOMATIC VENDER – A vender which delivers a product electromechanically by the use of motors or solenoids or both.

5.4 BARRIER – A partition for isolating high-voltage electrical components, separating ignition sources from flammable materials, isolating moving parts and protection of wiring.

5.5 CABINET – The part of the equipment that provides physical protection to insulated wiring, enclosures, moving parts, motors, enclosed electrical parts, refrigeration tubing or other parts that may cause injury to persons.

5.6 CAPILLARY TUBE – Device made of tubing with an outer diameter of less than 3/16 in. (4.7 mm) and used to reduce the pressure of the refrigerant between the condenser and evaporator. It also regulates the refrigerant flow.

5.7 CELL – The basic photovoltaic device that generates electricity when exposed to sunlight.

5.8 CHARGE CONTROLLER – Equipment that controls dc voltage or dc current, or both, used to charge a battery.

5.9 COMPONENT – A device or fabricated part of the vender covered by the scope of a safety standard dedicated to that purpose. If incorporated in a vender, a product that is otherwise typically field installed (e.g. luminaire) is considered to be a component. Unless otherwise specified, materials that compose a device or fabricated part, such as aluminum or copper, are not considered components. Generally, components are incomplete in construction features or restricted in performance capabilities. Such components are intended for use only under specific, limited conditions, such as certain temperatures not exceeding specified limits.

5.10 CONTROL, OPERATING – A device or assembly of devices, the operation of which starts or regulates the end product during normal operation. For example, a thermostat, the failure of which a thermal cutout/limiter or another layer of protection would mitigate the potential risk of fire, electric shock, or injury to persons is considered an operating control. Operating controls are also referred to as ″regulating controls.″

5.11 CONTROL, PROTECTIVE – A device or assembly of devices, the operation of which is intended to reduce the risk of electric shock, fire or injury to persons during normal and reasonably anticipated abnormal operation of the appliance. For example, a thermal cutout/limiter, or any other control/circuit relied upon for normal and abnormal conditions, is considered a protective control. Protective controls are also referred to as ″limiting controls″ or ″safety controls″ and are investigated under normal and single-fault conditions.

UL COPYRIGHTED MATERIAL –
NOT AUTHORIZED FOR FURTHER REPRODUCTION OR
DISTRIBUTION WITHOUT PERMISSION FROM UL

Documents
Document Sharing Hub

Copyright UL
Provided by IHS under license with UL
No reproduction or networking permitted without license from IHS
Full document details: UL 541 2011

Licensee=North Carolina State Univ/5618801100
Not for Resale, 07/06/2013 19:32:09 MDT

5.12 CONVERTER – A device that accepts ac or dc power input and converts it to another form of ac or dc power.

5.13 ENCLOSURE – The part of the equipment that does one or more of the following:

a) Isolates ignition sources;

b) Renders inaccessible all or any part(s) of the equipment that may otherwise present a risk of electric shock; or

c) Retards propagation of flame initiated by electrical disturbances occurring within.

5.14 FUNCTIONAL PART – A part other than an enclosure or cabinet used to maintain the intended relative physical position of fixed or moving parts, or maintain the integrity of the structure.

5.15 HIGH VOLTAGE CIRCUIT – A high-voltage circuit is one involving a potential of not more than 600 volts and having circuit characteristics in excess of those of a low-voltage circuit as defined in 5.20.

5.16 IGNITION SOURCE – Any high-voltage electrical component not located within an enclosure.

5.17 INTENDED LOCATION:

a) INDOOR – Located inside a building and consequently not subjected to the effects of weathering.

b) PROTECTED – Located in an area which is partially protected from the effects of weathering through the use of a roof, canopy, marquee, or the like.

c) OUTDOOR – Located in the open and subjected to the full effects of weathering.

5.18 INTERACTIVE SYSTEM – A solar photovoltaic system providing power to a vender and operating in parallel with and may deliver power to an electrical production and distribution network.

5.19 INVERTER – Equipment that is used to change voltage level or waveform, or both, of electrical energy and typically changes dc input to an ac output.

5.20 LOW-VOLTAGE CIRCUIT – A low-voltage circuit is one involving a potential of not more than 30 volts alternating current, 42.4 volts peak or direct current, and supplied by a standard Class 2 transformer or by a suitable combination of transformer and fixed impedance having output characteristics in compliance with those required for a Class 2 transformer.

5.21 MODULE – A complete, environmentally protected unit consisting of solar cells, optics, and other components, exclusive of a solar tracker mechanism, designed to generate dc power when exposed to sunlight.

5.22 MOTOR CONTROLLER – Any device normally used to start and stop a motor, such as a switch, thermostat, pressure limiting control, or the like.

5.23 NONAUTOMATIC VENDER – A vender which delivers a product by requiring the customer to operate the vending mechanism by moving a lever, knob, bottle, or the like.

5.24 NONFUNCTIONAL PART – A part of the equipment that does not perform a specific function.

UL COPYRIGHTED MATERIAL –
NOT AUTHORIZED FOR FURTHER REPRODUCTION OR
DISTRIBUTION WITHOUT PERMISSION FROM UL

Documents
Document Sharing Hub

Copyright UL
Provided by IHS under license with UL
No reproduction or networking permitted without license from IHS
Full document details: UL 541 2011

Licensee=North Carolina State Univ/5618801100
Not for Resale, 07/06/2013 19:32:09 MDT

5.25 NONFUNCTIONAL PART, SMALL – A nonfunctional part having an area of less than 1 ft^2 (0.093 m^2) located so it cannot propagate flame from one area to another, and does not connect a possible source of ignition to the other ignitable parts.

5.26 ROUTE PERSON – The person who regularly opens a vender for such purposes as cleaning, inserting/removing currency or coins, replenishing the product supplied, and making minor adjustments.

5.27 SERVICE PERSON – The person who may periodically open a vender to repair or maintain electrical and mechanical components.

5.28 SOLAR PHOTOVOLTAIC (PV) SYSTEM – The total components and subsystems that, in combination, convert solar energy into electric energy suitable for connection to a load such as a vender.

5.29 STAND-ALONE SYSTEM – A solar photovoltaic system that supplies power independently of an electrical production and distribution network.

5.30 VENDER, THERMOELECTRIC – A refrigerated vender in which the product to be vended is chilled by applying a direct current supply source to a semiconductor thermoelectric module creating a temperature gradient which transfers heat from one surface to another (may also be known as the ″Peltier Effect″).

5.31 VENDERS (OR REFRIGERATED VENDING MACHINES) – Any self-service device that dispenses products or merchandise without the necessity of replenishing the device between each vending operation and designed to require insertion of a coin, paper currency, token, card, key or receipt of payment by other means. Refrigerated vending machines are self-contained, completely factory-made and factory-tested assemblies to which no refrigerant-containing parts are connected in the field.

CONSTRUCTION

6 General

6.1 The assembly shall be constructed so that the public, route person, and service person will be protected against unintentional contact with uninsulated live parts. See Electrical Enclosures, 13.3.

6.2 Enclosures for an individual electrical component, or a group of components, outer cabinets, and combinations of the two, are considered in determining compliance with the requirement in 6.1.

6.3 Combustible or electrically conductive thermal insulation shall not contact uninsulated live parts. See Insulation Resistance Test, Section 66.

6.4 Except for mechanical parts which are necessarily exposed during intended operation, the rotors of motors, pulleys, belts, gears, and the like, shall be enclosed or guarded to protect the public, route person, and service person against unintentional contact.

UL COPYRIGHTED MATERIAL –
NOT AUTHORIZED FOR FURTHER REPRODUCTION OR
DISTRIBUTION WITHOUT PERMISSION FROM UL
Documents
Document Sharing Hub
Copyright UL
Provided by IHS under license with UL
No reproduction or networking permitted without license from IHS
Full document details: UL 541 2011
Licensee=North Carolina State Univ/5618801100
Not for Resale, 07/06/2013 19:32:09 MDT

6.5 A vender shall be assembled so that removal and replacement of tanks and containers, replenishment of the product, and the like, will not result in damage to electrical components and wiring, or to refrigerant-containing components.

6.6 Electrical components shall be located or enclosed so that:

a) Liquid due to splashing, leakage, overflow, or condensation will not drain on or be drawn onto uninsulated live parts; and

b) Product materials will not contact uninsulated live parts if spilled.

6.7 If a failure of a liquid container, hose, fitting, or product line provided as part of a vender would result in a risk of electric shock or injury to persons, these components shall be of material which is resistant to corrosion by the liquid intended to be used therein and shall have the necessary strength for the pressures involved. See Strength Tests, Section 83.

6.8 A switch, lampholder, an attachment plug receptacle, a motor attachment plug, or similar component shall be secured in position and shall be prevented from turning. See 6.9.

Exception No. 1: The requirement that a switch be prevented from turning will be waived if all of the following conditions are met:

a) The switch is a plunger or other type that does not tend to rotate when operated. A toggle switch is considered to be subject to forces that tend to turn the switch during the operation of the switch.

b) Means of mounting the switch make it unlikely that operation of the switch will loosen it.

c) The spacings are not reduced below the minimum required values if the switch rotates.

d) Operation of the switch is by mechanical means rather than direct contact by persons.

Exception No. 2: A lampholder of a type in which the lamp cannot be replaced, such as a neon pilot or indicator light in which the lamp is sealed in a nonremovable jewel, need not be prevented from turning if rotation cannot reduce spacings below the minimum acceptable values.

6.9 The means for preventing rotation mentioned in 6.8 shall consist of more than friction between surfaces. A toothed lock washer that provides both spring take-up and an interference lock is acceptable as means for preventing a small stem-mounted switch or other device having a single-hole mounting means from turning.

6.10 An uninsulated current carrying part and a part that supports a live part shall be secured to the base or mounting surface so that it will be prevented from turning or shifting in position if such motion may result in a reduction in spacings below the minimum acceptable values specified in 50.2.

6.11 Friction between surfaces is not acceptable as a means to prevent shifting or turning of a live part but a lock washer as described in 6.9 is acceptable.

UL COPYRIGHTED MATERIAL –
NOT AUTHORIZED FOR FURTHER REPRODUCTION OR
DISTRIBUTION WITHOUT PERMISSION FROM UL

Documents
Document Sharing Hub

Copyright UL
Provided by IHS under license with UL
No reproduction or networking permitted without license from IHS
Full document details: UL 541 2011

Licensee=North Carolina State Univ/5618801100
Not for Resale, 07/06/2013 19:32:09 MDT

6.12 A vender which provide for the storage of carbon dioxide cylinders, or the like, shall be provided with means for retaining the cylinders in position.

6.13 A vender shall be equipped to prevent the dispensing of a free product or coins by rocking or tilting the vender. See Antitheft Device Test, Section 70.

Exception: The test in Section 46 need not be conducted if the vendor is rigidly secured to a wall, pillar, floor or other permanent part of a building structure.

6.14 A component shall:

a) Comply with the safety standard covering that component;

b) Be used in accordance with its rating(s) established for the intended conditions of use;

c) Be used within its established use limitations or conditions of acceptability;

d) Comply with the applicable requirements of this end product standard; and

e) Not contain mercury.

Exception: A component of a product covered by this standard is not required to comply with a specific component requirement that:

a) Involves a feature or characteristic not required in the application of the component in the product;

b) Is superseded by a requirement in this standard; or

c) Is separately investigated when forming part of another component, provided the component is used within its established ratings and limitations.

6.15 A component that is also required to perform other necessary functions, such as overcurrent protection, ground-fault circuit interruption, surge suppression, any other similar functions, or any combination thereof, shall comply additionally with the requirements of the applicable standard(s) covering products that provide those functions.

6.16 Ferrous metal parts shall be protected against corrosion by metallic or nonmetallic coatings, such as plating or painting if they are used as follows:

a) To support or retain electrical components in position; or

b) Within the bonding or grounding path.

UL COPYRIGHTED MATERIAL –
NOT AUTHORIZED FOR FURTHER REPRODUCTION OR
DISTRIBUTION WITHOUT PERMISSION FROM UL

Documents
Document Sharing Hub

Copyright UL
Provided by IHS under license with UL
No reproduction or networking permitted without license from IHS
Full document details: UL 541 2011

Licensee=North Carolina State Univ/5618801100
Not for Resale, 07/06/2013 19:32:09 MDT

7 Nonmetallic Parts

7.1 All nonmetallic parts, except for small nonfunctional parts shall comply with the requirements in Nonmetallic Materials, Section 8, Nonmetallic Material Ignition Sources Separation, Section 9 and Nonmetallic Material Application and Location, Section 10 and Table 92.1.

7.2 In addition to the requirement in 7.1, nonmetallic materials that serve as electrical insulation or that directly support live parts shall comply with the requirements for electric insulation in the Standard for Polymeric Materials – Use in Electrical Equipment Evaluations, UL 746C.

8 Nonmetallic Materials

8.1 Materials shall be classified with respect to flammability characteristics that are established by the tests specified in the Standard for Tests for Flammability of Plastic Materials for Parts in Devices and Appliances, UL 94.

8.2 Materials shall be assigned flammability ratings based on greatest to least resistance to flame and are identified as: 5VA, 5VB, V-0, V-1, V-2, HF-1, HF-2, HB, and HBF.

8.3 With reference to 8.2, the assigned flammability rating shall be appropriate for the material-use application in accordance with Nonmetallic Material Ignition Sources Separation, Section 9, and Table 92.1.

9 Nonmetallic Material Ignition Sources Separation

9.1 Parts formed from nonmetallic materials that are rated HB or HBF and positioned as shown in Figure 9.1 shall be separated from ignition sources by means of a barrier, extending at least to the boundary surface of the space whenever such parts are located:

a) Below an ignition source and within Space A of Figure 9.1;

b) Above an ignition source and within Space B of Figure 9.1; and

c) In the vertical plane relative to an ignition source and within Space C of Figure 9.1.

UL COPYRIGHTED MATERIAL –
NOT AUTHORIZED FOR FURTHER REPRODUCTION OR
DISTRIBUTION WITHOUT PERMISSION FROM UL

Documents
Document Sharing Hub

Copyright UL
Provided by IHS under license with UL
No reproduction or networking permitted without license from IHS
Full document details: UL 541 2011

Licensee=North Carolina State Univ/5618801100
Not for Resale, 07/06/2013 19:32:09 MDT

Figure 9.1
Separation of ignition sources from nonmetallic materials

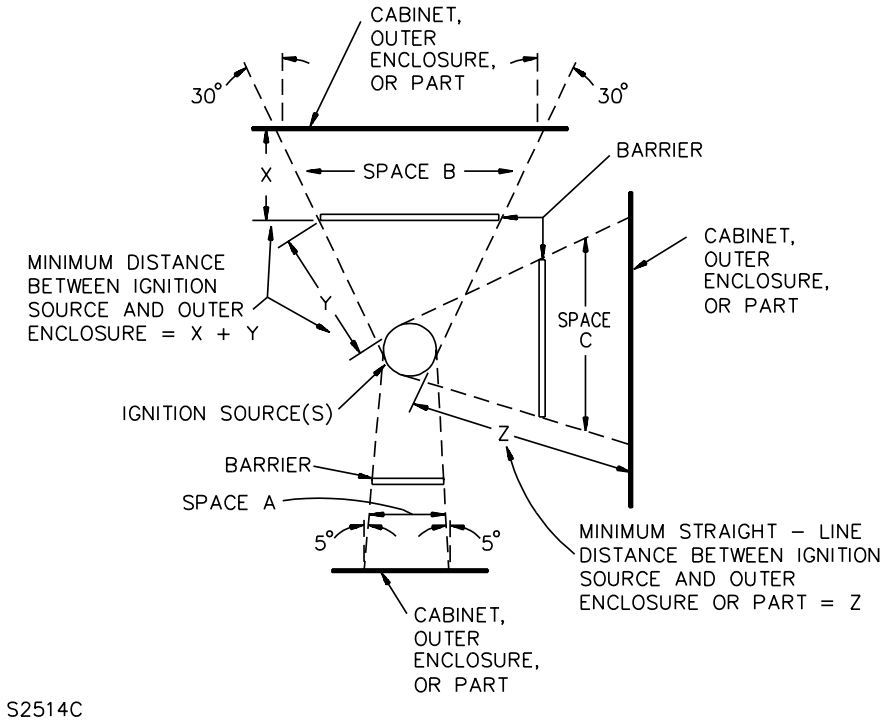

9.2 The HB or HBF materials referenced by 9.1 shall be located such that the distance between:

a) High-voltage wiring not employing VW-1 insulation and the HB or HBF materials shall be a minimum of 2 inches (51 mm); and

b) Any other ignition source and the HB or HBF materials shall be a minimum of 4 inches (102 mm).

9.3 With reference to 9.2 and Figure 9.1, the minimum distance for HB or HBF materials located:

a) Above the ignition source shall be as shown in Distance X + Y; and

b) In the vertical plane relative to the ignition source shall be as shown in straight-line Distance Z.

UL COPYRIGHTED MATERIAL –
NOT AUTHORIZED FOR FURTHER REPRODUCTION OR
DISTRIBUTION WITHOUT PERMISSION FROM UL

Documents
Document Sharing Hub

Copyright UL
Provided by IHS under license with UL
No reproduction or networking permitted without license from IHS
Full document details: UL 541 2011

Licensee=North Carolina State Univ/5618801100
Not for Resale, 07/06/2013 19:32:09 MDT

10 Nonmetallic Material Application and Location

10.1 Nonmetallic materials shall comply with the applicable tests as described in Table 90.1.

10.2 Nonmetallic fasteners used as a part of the enclosure shall comply with the requirements in the Fastener Strength Test, Section 93.

11 Barriers

11.1 A barrier shall be formed from one or more of the following:

a) Metal, minimum 0.005 inch (0.13 mm) thick;

b) Fiberglass, minimum 0.5 inch (12.7 mm) thick;

c) A nonmetallic material rated 5VA;

d) A nonmetallic material evaluated to the 127 mm (5 inch) End Product Flame Test as described in the Standard for Polymeric Materials – Use in Electrical Equipment Evaluations, UL 746C;

e) Vulcanized fiber, varnished cloth or phenolic composition, minimum 0.028 in. (0.71 mm) thick; or

f) Any other material or construction determined to be equivalent to items (a) to (e).

11.2 A barrier shall be secured to the mounting surface such that tools are required for its removal.

11.3 Except as specified in 16.1.3(d), 27.1 and 50.7 a nonmetallic barrier that isolates ignition source(s) shall comply with the enclosure requirements of Table 92.1.

11.4 A nonmetallic barrier providing mechanical protection source(s) shall comply with the cabinet requirements of Table 92.1.

12 Accessories

12.1 A vender having provisions for the use of accessories to be attached in the field shall be constructed so that their use will not introduce a risk of electric shock, fire, or injury to persons.

12.2 The installation of accessories shall be restricted to an arrangement that can be accomplished by means of receptacles and plug-in connectors.

12.3 A cord-connected accessory, including means for external interconnection between the accessory and vender, shall employ a power-supply cord and strain-relief means in accordance with 15.9 – 15.18.

12.4 Strain relief means shall be provided for the wiring in the accessory if there is a possibility of transmitting strain to the terminal connections during installation.

UL COPYRIGHTED MATERIAL –
NOT AUTHORIZED FOR FURTHER REPRODUCTION OR
DISTRIBUTION WITHOUT PERMISSION FROM UL

Documents
Document Sharing Hub

Copyright UL
Provided by IHS under license with UL
No reproduction or networking permitted without license from IHS
Full document details: UL 541 2011

Licensee=North Carolina State Univ/5618801100
Not for Resale, 07/06/2013 19:32:09 MDT

12.5 As part of the investigation, accessories are to be trial-installed to determine that their installation is feasible, that the instructions are detailed and correct, and that the use of the accessories does not introduce a risk of electric shock, fire, or injury to persons.

12.6 An accessory shall have provision for the grounding of all exposed or accessible noncurrent-carrying metal parts that may be contacted by the user or by route and service personnel during service operations that are likely to be performed while the accessory is energized.

13 Enclosures

13.1 General

13.1.1 Each enclosures shall be so formed and assembled that it will have the strength and rigidity necessary to resist the abuses to which it may be subjected without increasing the risk of fire or injury to persons due to total or partial collapse, with resulting reduction of spacings, loosening or displacement of parts, or other serious defects.

13.1.2 An enclosure of sheet metal is evaluated with respect to its size, shape, thickness of metal, and use in a particular application. Sheet steel shall not be less than 0.026 inch (0.66 mm) thick if uncoated, or 0.029 inch (0.74 mm) if galvanized; nonferrous sheet metal shall not be less than 0.036 inch (0.91 mm) thick.

Exception: Relatively small areas or surfaces which are curved or otherwise reinforced may be thinner.

13.1.3 Among the factors which are to be taken into consideration when evaluating an enclosure are:

a) Mechanical strength;

b) Resistance to impact;

c) Moisture-absorptive properties;

d) Flammability;

e) Resistance to distortion at temperatures to which the material may be subjected under conditions of use; and

f) Resistance to corrosion.

13.1.4 A glass panel used for the enclosure of electrical parts or that is subject to contact during intended use or maintenance of the vendor, or both, shall be supported or secured in place and shall comply with the Glass Strength Test, Section 84.

13.1.5 Exterior glass having an exposed minor dimension greater than 12 in (305 mm) and an area greater than 1 ft^2 (0.093 m^2) shall comply with the Impact Test, Section 84.1.

UL COPYRIGHTED MATERIAL –
NOT AUTHORIZED FOR FURTHER REPRODUCTION OR
DISTRIBUTION WITHOUT PERMISSION FROM UL

Documents
Document Sharing Hub

Copyright UL
Provided by IHS under license with UL
No reproduction or networking permitted without license from IHS
Full document details: UL 541 2011

Licensee=North Carolina State Univ/5618801100
Not for Resale, 07/06/2013 19:32:09 MDT

13.1.6 Exterior glass having an exposed minor dimension greater than 3 in (76 mm) shall comply with the Mechanical Pressure Test, Section 84.2.

13.1.7 Other than as specified in 13.1.8 – 13.1.10, glass that is subject to contact during use and routine maintenance of the vendor shall not have a thickness less than 0.115 in (2.92 mm), and shall comply with Impact Test, Section 84.1 or Mechanical Pressure Test, Section 84.2.

13.1.8 The effects of the following factors shall be considered in the investigation of glass panels and glass components heated by electrically conductive surfaces or other means:

a) Electrical input;

b) Temperature rise;

c) Operation of overvoltage condition;

d) Ability to withstand dielectric potential;

e) Reliability of vapor seal;

f) Resistance to moisture;

g) Stability of conductive coating;

h) Aging of terminal assemblies;

i) Resistance to impact; and

j) Resistance to thermal shock.

13.1.9 A glass component, other than a lamp, used inside a vendor shall have smooth edges if the edges are exposed to contact during routine use, including cleaning. Edges exposed when the glass component is in its intended storage position shall be fire polished, heat-toughened or tempered, or covered by permanently attached smooth framing.

13.1.10 The glass components specified in 13.1.9 shall comply with Glass Component Strength Test, Section 85.

UL COPYRIGHTED MATERIAL –
NOT AUTHORIZED FOR FURTHER REPRODUCTION OR
DISTRIBUTION WITHOUT PERMISSION FROM UL

Documents
Document Sharing Hub

Copyright UL
Provided by IHS under license with UL
No reproduction or networking permitted without license from IHS
Full document details: UL 541 2011

Licensee=North Carolina State Univ/5618801100
Not for Resale, 07/06/2013 19:32:09 MDT

13.2 Protection against corrosion

13.2.1 Steel enclosures shall be protected against corrosion by metallic or nonmetallic coatings as specified in 13.2.2 – 13.2.8.

13.2.2 Venders for protected or outdoor use (see 5.17) shall employ enclosures which prevent the wetting of live parts and reduce the risk of electric shock due to weather exposure. Enclosures for electrical components shall have provision for drainage if knockouts or unthreaded openings are employed in the enclosure. See Rain Test, Section 67.

13.2.3 Sheet steel cabinets and electrical enclosures exposed to the effects of weathering shall be protected against corrosion by the means indicated in Table 13.1, or by other metallic or nonmetallic coatings which provide equivalent protection.

Exception: The requirement is not applicable to a metal part, such as a decorative grille, which is not required for compliance with this standard.

Table 13.1
Corrosion protection

Type of cabinet and enclosure	No. 16 MSG/GSG and heavier as specified by	Lighter than No. 16 MSG/GSG as specified by
Outer cabinets which protect motors, wiring, or enclosed current carrying parts	13.2.4	13.2.5
Inside enclosures which protect current carrying parts	13.2.4	13.2.5
Outer cabinets which are the sole enclosure of current carrying parts	13.2.5	13.2.5

13.2.4 To comply with the applicable requirement of Table 13.1 one of the following coatings shall be used:

a) Hot-dipped mill galvanized sheet steel conforming with the Coating Designation G60 or A60 in Table 1 of the Standard Specification for Steel Sheet, Zinc-Coated (Galvanized) or Zinc-Iron Alloy-Coated (Galvannealed) by the Hot-Dip Process, ASTM A653/A653M, with not less than 40 percent of the zinc on any side, based on the minimum single spot test requirement in this ASTM Specification. The weight of zinc coating may be determined by any suitable method; however, in case of question the weight of coating shall be established in accordance with the Test Method of the Standard Test Method for Weight [Mass] of Coating on Iron and Steel Articles with Zinc or Zinc-Alloy Coatings, ASTM A90. An A60 (alloyed) coating shall also comply with 13.2.6.

b) A zinc coating, other than that provided on hot-dipped mill galvanized sheet steel, uniformly applied to an average thickness of not less than 0.00041 inch (0.0104 mm) on each surface with a minimum thickness of 0.00034 inch (0.0086 mm). The thickness of the coating shall be established by the Metallic Coating Thickness Test, Section 90. An annealed coating shall also comply with 13.2.6.

c) Two coats of an organic finish of the epoxy or alkyd-resin type or other outdoor paint on both surfaces. The suitability of the paint may be determined by consideration of its composition or by corrosion tests if these are considered necessary.

UL COPYRIGHTED MATERIAL –
NOT AUTHORIZED FOR FURTHER REPRODUCTION OR
DISTRIBUTION WITHOUT PERMISSION FROM UL

Documents
Document Sharing Hub

Copyright UL
Provided by IHS under license with UL
No reproduction or networking permitted without license from IHS
Full document details: UL 541 2011

Licensee=North Carolina State Univ/5618801100
Not for Resale, 07/06/2013 19:32:09 MDT

13.2.5 To comply with the applicable requirement of Table 13.1, one of the following coatings shall be used:

a) Hot-dipped mill galvanized sheet steel conforming with the Coating Designation G90 in Table 1 of Standard Specification for Steel Sheet, Zinc-Coated (Galvanized) or Zinc-Iron Alloy-Coated (Galvannealed) by the Hot-Dip Process, ASTM A653/A653M, with not less than 40 percent of the zinc on any side, based on the minimum single spot test requirement in this ASTM Specification. The weight of zinc coating may be determined by any suitable method; however, in case of question the weight of coating is to be established in accordance with the Test Method of Standard Test Method for Weight [Mass] of Coating on Iron and Steel Articles with Zinc or Zinc-Alloy Coatings, ASTM A90/A90M.

b) A zinc coating, other than that provided on hot-dipped mill galvanized sheet steel, uniformly applied to an average thickness of not less than 0.00061 inch (0.0155 mm) on each surface with a minimum thickness of 0.00054 inch (0.0137 mm). The thickness of the coating is to be established by the Metallic Coating Thickness Test, Section 90. An annealed coating shall also comply with 13.2.6.

c) A cadmium coating not less than 0.001 inch (0.025 mm) thick on both surfaces. The thickness of coating is to be established by the Metallic Coating Thickness Test.

d) A zinc coating conforming with 13.2.4(a) or (b) with one coat of outdoor paint as specified in 13.2.4(c).

e) A cadmium coating not less than 0.00075 inch (0.0191 mm) thick on both surfaces with one coat of outdoor paint on both surfaces, or not less than 0.0005 inch (0.013 mm) thick on both surfaces with two coats of outdoor paint on both surfaces. The thickness of the cadmium coating is to be established by the Metallic Coating Thickness Test and the paint shall be as specified in 13.2.4(c).

13.2.6 An annealed zinc coating which is bent or similarly formed after annealing shall additionally be painted in the bent or formed area if the bending or forming process damages the zinc coating.

13.2.7 If flaking or cracking of the zinc coating at the outside radius of the bent or formed section is visible at 25 power magnification, the zinc coating is considered damaged. Simple sheared or cut edges and punched holes are not considered to be formed, but extruded and rolled edges and holes are to conform with 13.2.6.

13.2.8 With reference to 13.2.3, other finishes, including paints, special metallic finishes and combinations of the two may be accepted when comparative tests with galvanized sheet steel without annealing, wiping, or other surface treatment conforming with 13.2.4(a) or 13.2.5(a), as applicable, indicate they provide equivalent protection. Among the factors which are taken into consideration when judging such coating systems are exposure to salt spray, moist carbon dioxide-sulphur dioxide-air mixtures, moist hydrogen sulphide-air mixtures, ultraviolet light, and water.

13.2.9 Nonferrous enclosures may be employed without special corrosion protection. The thickness of the material is to be judged on the basis of its strength and rigidity.

UL COPYRIGHTED MATERIAL –
NOT AUTHORIZED FOR FURTHER REPRODUCTION OR
DISTRIBUTION WITHOUT PERMISSION FROM UL

Documents
Document Sharing Hub

Copyright UL
Provided by IHS under license with UL
No reproduction or networking permitted without license from IHS
Full document details: UL 541 2011

Licensee=North Carolina State Univ/5618801100
Not for Resale, 07/06/2013 19:32:09 MDT

13.3 Electrical enclosures

13.3.1 Each gasket required to seal an electrical enclosure against the entrance of rain and condensate shall:

a) Comply with 89.1 – 89.7 or with the Standard for Gaskets and Seals, UL 157;

b) Be held in place by mechanical fasteners or adhesives except as specified in 13.3.2;

c) Be neoprene, rubber, or thermoplastic or other materials with equivalent properties.

13.3.2 With reference to 13.3.1(b), gaskets which are not held in place by mechanical fasteners or adhesives but are intended to be retained in the correct position by some other means shall be prevented from displacement either:

a) Due to their location within the equipment; or

b) By the placement of other components in the enclosure so that if the equipment cover is removed, the gasket will be reengaged in the intended manner when the cover is replaced.

13.3.3 Adhesives required to secure gaskets shall comply with 89.7.

13.3.4 The frame or chassis of a vender shall not be relied on to carry current during operation.

13.3.5 Sheet metal to which a wiring system is to be connected in the field shall have a thickness not less than 0.032 inch (0.81 mm) if uncoated steel, not less than 0.034 inch (0.86 mm) if galvanized steel, and not less than 0.045 inch (1.14 mm) if nonferrous.

13.3.6 Electrical components, such as relays, solenoids, and electrically operated valves, shall be individually enclosed, except at terminals, unless it can be determined that failure of the component will not result in a risk of fire. See 6.2 and Burnout Tests – Components, Section 76.

13.3.7 The assembly shall be arranged so that fuses can be replaced and manual-reset devices can be reset without removing parts other than a service cover or panel and without contacting uninsulated live parts. See 13.3.16.

13.3.8 Covers for enclosures of fuses in high-voltage circuits, shall be hinged. Covers for manual-reset overload protective device enclosures shall be hinged if it is necessary to open the cover to reset the device.

Exception: A fuseholder may be installed in a vender without being enclosed if the vender enclosure is complete and nonflammable and contains no flammable material in proximity to or under the fuses.

13.3.9 Hinged covers, where required by 13.3.8, shall not depend solely upon screws or other similar means requiring the use of tools to hold them closed, but shall be provided with a spring latch or catch.

UL COPYRIGHTED MATERIAL –
NOT AUTHORIZED FOR FURTHER REPRODUCTION OR
DISTRIBUTION WITHOUT PERMISSION FROM UL

Documents
Document Sharing Hub

Copyright UL
Provided by IHS under license with UL
No reproduction or networking permitted without license from IHS
Full document details: UL 541 2011

Licensee=North Carolina State Univ/5618801100
Not for Resale, 07/06/2013 19:32:09 MDT

13.3.10 A door or cover giving direct access to fuses in other than low-voltage circuits, shall shut closely against a 1/4 inch (6.4 mm) rabbet, or the equivalent, or shall have either turned flanges for the full length of four edges or angle strips fastened to it. Flanges or angle strips shall fit closely with the outside of the wall of the box proper and shall overlap the edges of the box not less than 1/2 inch (12.7 mm). A special construction, such as a fuse enclosure, located within an outer enclosure, or a flange and rabbet combination which affords the equivalent protection is acceptable.

13.3.11 Strips used to provide rabbets, or angle strips fastened to the edge of a door, shall be secured at not less than two points, not more than 1-1/2 inches (38 mm) from each end of each strip and at points between these end fastenings not more than 6 inches (152 mm) apart.

13.3.12 The requirements in 13.3.13 – 13.3.15 apply only to parts of high-voltage circuits as defined by 5.15.

13.3.13 Uninsulated live parts of a vender shall be located, guarded, or enclosed so as to prevent accidental contact by persons through openings in the enclosure.

13.3.14 Behind a locked door, an opening:

a) That will not permit entrance of a 3/4 inch (113.1 mm) diameter rod is acceptable if:

1) A probe as illustrated in Figure 13.1 cannot be made to touch any uninsulated live part when inserted through the opening; and

2) A probe as illustrated in Figure 13.2 cannot be made to touch film-coated wire when inserted through the opening.

b) That will permit entrance of a 3/4 inch (113.1 mm) diameter rod is acceptable under the conditions described in Figure 13.3.

UL COPYRIGHTED MATERIAL –
NOT AUTHORIZED FOR FURTHER REPRODUCTION OR
DISTRIBUTION WITHOUT PERMISSION FROM UL

Documents
Document Sharing Hub

Copyright UL
Provided by IHS under license with UL
No reproduction or networking permitted without license from IHS
Full document details: UL 541 2011

Licensee=North Carolina State Univ/5618801100
Not for Resale, 07/06/2013 19:32:09 MDT

Figure 13.1
Probe

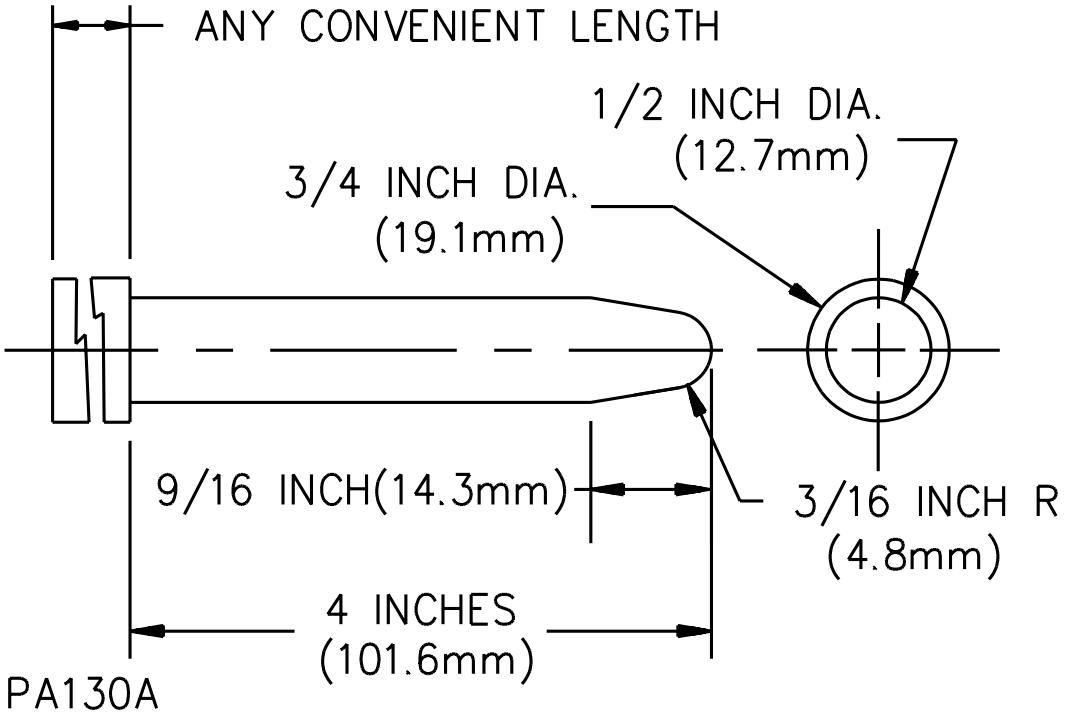

UL COPYRIGHTED MATERIAL –
NOT AUTHORIZED FOR FURTHER REPRODUCTION OR
DISTRIBUTION WITHOUT PERMISSION FROM UL

Documents
Document Sharing Hub

Copyright UL
Provided by IHS under license with UL
No reproduction or networking permitted without license from IHS
Full document details: UL 541 2011

Licensee=North Carolina State Univ/5618801100
Not for Resale, 07/06/2013 19:32:09 MDT

Figure 13.2
Probe

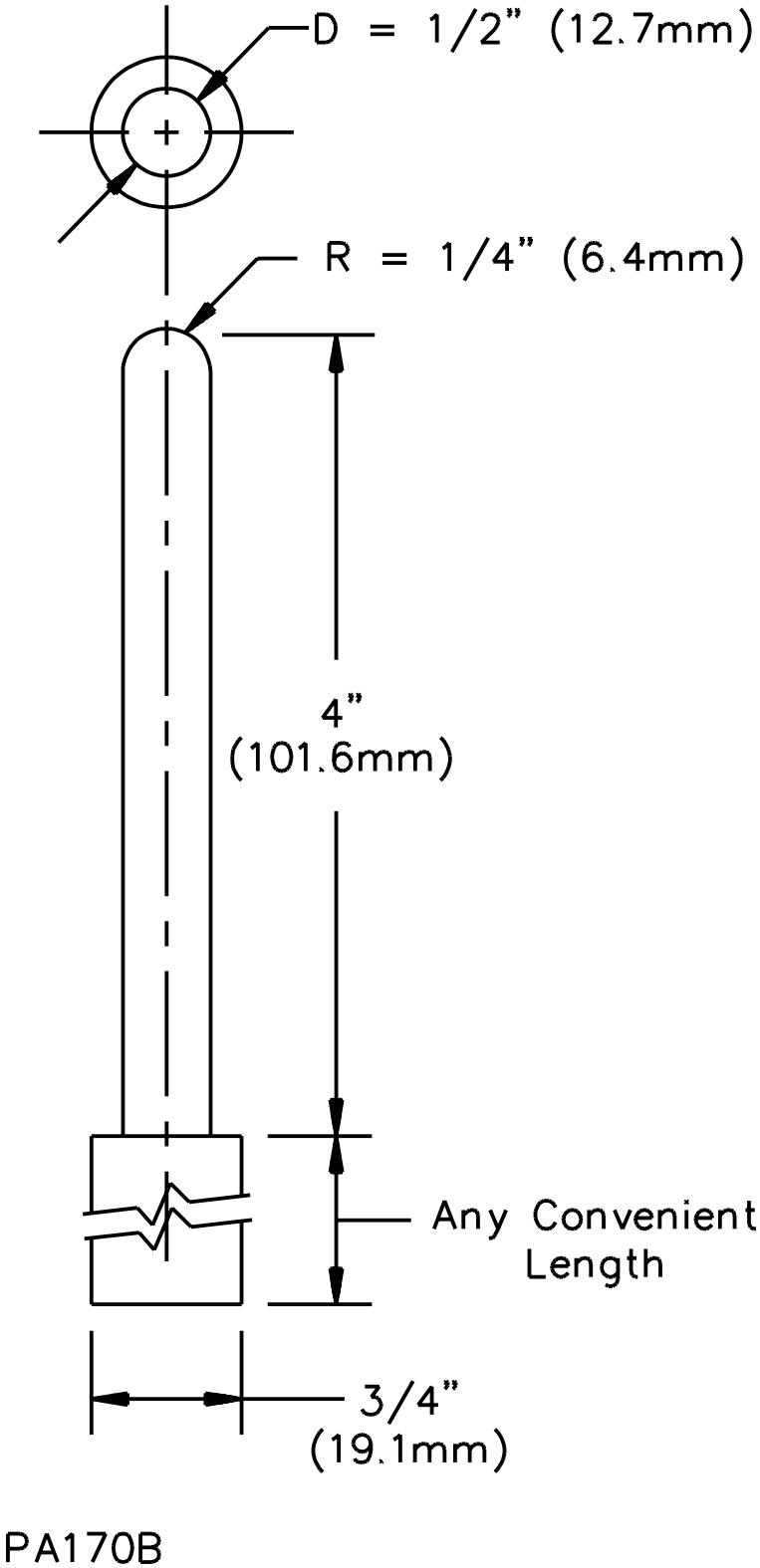

UL COPYRIGHTED MATERIAL –
NOT AUTHORIZED FOR FURTHER REPRODUCTION OR
DISTRIBUTION WITHOUT PERMISSION FROM UL

Documents
Document Sharing Hub

Copyright UL
Provided by IHS under license with UL
No reproduction or networking permitted without license from IHS
Full document details: UL 541 2011

Licensee=North Carolina State Univ/5618801100
Not for Resale, 07/06/2013 19:32:09 MDT

Figure 13.3
Opening in enclosure

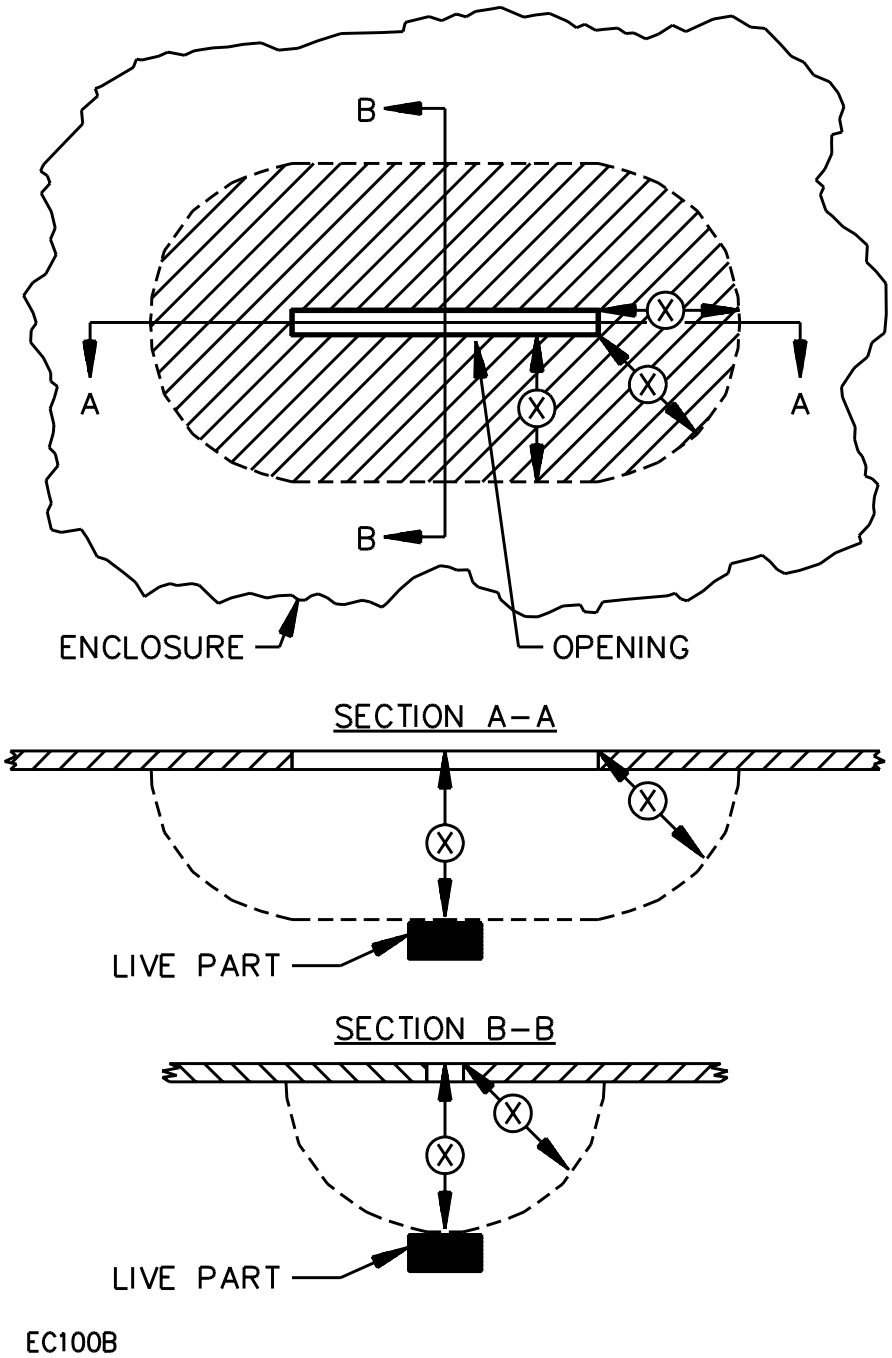

The opening is acceptable if, within the enclosure, there is no uninsulated live metal part or film-coated wire (1) less than X inches (mm) from the perimeter of the opening, as well as (2) within the volume generated by projecting the perimeter X inches (mm) normal to its plane. X equals five times the diameter of the largest diameter rod which can be inserted through the opening, but not less than 4 inches (102 mm).

UL COPYRIGHTED MATERIAL –
NOT AUTHORIZED FOR FURTHER REPRODUCTION OR
DISTRIBUTION WITHOUT PERMISSION FROM UL

Documents
Document Sharing Hub

Copyright UL
Provided by IHS under license with UL
No reproduction or networking permitted without license from IHS
Full document details: UL 541 2011

Licensee=North Carolina State Univ/5618801100
Not for Resale, 07/06/2013 19:32:09 MDT

13.3.15 An opening in the outer enclosure of a vender is acceptable if a probe as illustrated in Figure 13.4 cannot be made to touch any uninsulated live part or film coated wire when inserted through the opening.

Figure 13.4
Probe

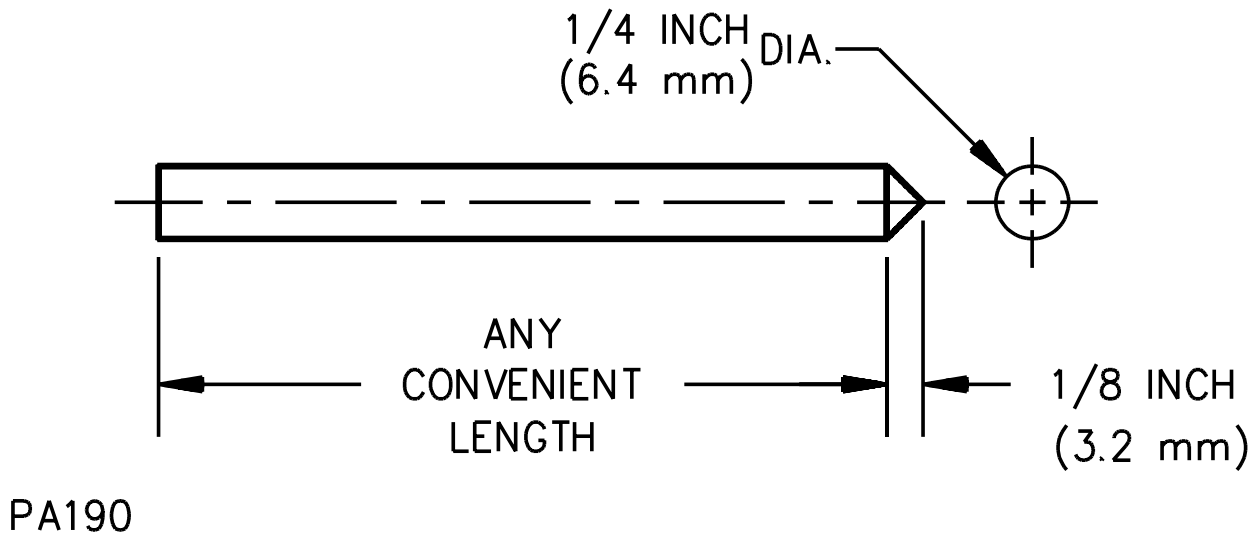

13.3.16 Uninsulated live parts in compartments which are intended to be opened for refilling, coin collecting, relamping, lubricating, control adjusting, control resetting, or other such service operations shall be so enclosed, located, or guarded as to prevent unintentional contact while performing such operations.

13.3.17 The requirement in 13.3.16 necessitates the use of enclosures, covers, or barriers over uninsulated live parts which the service person or route person may inadvertently touch in servicing or adjusting the machine. A cover or barrier which must be removed in performing these functions is not considered as providing the protection required.

UL COPYRIGHTED MATERIAL –
NOT AUTHORIZED FOR FURTHER REPRODUCTION OR
DISTRIBUTION WITHOUT PERMISSION FROM UL

Documents
Document Sharing Hub

Copyright UL
Provided by IHS under license with UL
No reproduction or networking permitted without license from IHS
Full document details: UL 541 2011

Licensee=North Carolina State Univ/5618801100
Not for Resale, 07/06/2013 19:32:09 MDT

13.4 Protection from risk of injury

13.4.1 If the operation of a vender involves the risk of injury, protection shall be provided to reduce the likelihood of injury. See 13.4.2 – 13.4.8.

13.4.2 Each coin return and product discharge opening, including those portions of product discharge chutes which may be accessible to the user, are to be evaluated to determine compliance with 13.4.1.

13.4.3 The details of guards, safety releases, pressure relief valves, interlocks, and the like, are not specified; but the need for such accessories and the adequacy of any such accessory provided are to be determined from a study of the complete appliance, its operating characteristics, and the risk of injury resulting from other than gross negligence.

13.4.4 With reference to the requirement in 13.4.3, the degree of protection required of the enclosure depends upon the general construction and intended use of the machine. The factors to be taken into consideration in judging the acceptability of exposed moving parts are:

a) The degree of exposure;

b) The sharpness of the moving parts;

c) The risk of unintentional contact with the moving parts;

d) The speed of movement of those parts; and

e) The risk of fingers, arms, or clothing being drawn into the moving parts, such as at points where gears mesh or where belts travel onto a pulley or where moving parts close in a pinching or shearing action.

13.4.5 A lid that may cause injury upon unintentional closing shall be:

a) Counterweighted;

b) Spring-loaded,; or

c) Provided with an automatic latch to retain it in the open position. The action members of the latches shall be enclosed or guarded.

13.4.6 A guard shall be provided over a moving part that may cause injury to the service person or route person when a cover, door, panel, or other closure is opened or removed.

13.4.7 If the guard mentioned in 13.4.6 must be removed during servicing of a part, the guard shall be constructed and arranged so it can be easily removed and replaced.

13.4.8 An edge, projection, or corner of an enclosure, frame, guard, handle, or the like, shall be smooth, rounded, and not sufficiently sharp to constitute a risk of injury to persons during the intended use and maintenance of the appliance.

UL COPYRIGHTED MATERIAL –
NOT AUTHORIZED FOR FURTHER REPRODUCTION OR
DISTRIBUTION WITHOUT PERMISSION FROM UL

Documents
Document Sharing Hub

Copyright UL
Provided by IHS under license with UL
No reproduction or networking permitted without license from IHS
Full document details: UL 541 2011

Licensee=North Carolina State Univ/5618801100
Not for Resale, 07/06/2013 19:32:09 MDT

14 Supply Connections for Permanently Connected Venders

14.1 General

14.1.1 Venders of the following types shall have provision for permanent connection to the power supply in accordance with the National Electrical Code, ANSI/NFPA 70:

a) Units rated in excess of 250 volts;

b) Polyphase units; and

c) Units employing a water-cooled condenser.

14.1.2 As used in Terminals, Section 14.2, and Leads, Section 14.3, a field-wiring terminal is considered to be a terminal to which power supply, control, or equipment grounding connections will be made in the field when the vender is installed.

14.1.3 The wiring of a permanently connected vender shall terminate in an outlet box or similar compartment with provision for the connection of metal-clad cable or conduit, or shall have provisions for the connection of a nonmetallic wiring system which, in accordance with the National Electrical Code, ANSI/NFPA 70, would be acceptable for connection to the vender.

14.1.4 Space shall be provided in the field-wiring compartment or outlet box for installation of conductors of the number and size required by 14.1.6 using Type TW or THW wire when at least a 6 inch (150 mm) length of each conductor is brought into the wiring compartment.

Exception: Conductors other than Type TW or THW may be used if specified in the installation instructions.

14.1.5 The outlet box or compartment to which power supply connections are made shall be accessible for inspection after the vender is installed. The connections shall be accessible without removing parts other than a service cover or panel and the cover of the outlet box or compartment in which the connections are made.

14.1.6 The vender shall be provided with field-wiring terminals for connection of supply-circuit conductors. The terminals or leads sizes shall not be less than the size required by 99.10. It is assumed that branch circuit conductors rated 140°F (60°C) will be used.

UL COPYRIGHTED MATERIAL –
NOT AUTHORIZED FOR FURTHER REPRODUCTION OR
DISTRIBUTION WITHOUT PERMISSION FROM UL

Documents
Document Sharing Hub

Copyright UL
Provided by IHS under license with UL
No reproduction or networking permitted without license from IHS
Full document details: UL 541 2011

Licensee=North Carolina State Univ/5618801100
Not for Resale, 07/06/2013 19:32:09 MDT

14.2 Terminals

14.2.1 Pressure wire connectors shall be used for field-wiring terminals except that for field-wiring terminals intended for 8 AWG (8.4 mm^2) and smaller conductors, the parts to which wiring connections are made may consist of clamps or wire binding screws with cupped washers, terminal plates, or the equivalent to hold the wire in position.

14.2.2 Size 14 AWG (2.1 mm^2) wire shall be considered as being the smallest wire that can be used for branch circuit wiring and at a terminal intended for the connection of the power supply leads.

14.2.3 Upturned lugs or a cupped washer shall be capable of retaining a conductor of the size mentioned in 14.1.6, and 99.10 but no smaller than 14 AWG (2.1 mm^2), under the head of the screw or the washer.

14.2.4 Wiring terminals for use with all alloys of copper, aluminum, or copper-clad aluminum conductors, shall comply with 14.2.5 – 14.2.10 or with the Standard for Equipment Wiring Terminals for Use with Aluminum and/or Copper Conductors, UL 486E.

14.2.5 If a wire-binding screw is employed at a wiring terminal for the connection of supply circuit conductors, it shall be:

a) Not smaller than 8 (4.2 mm^2 diameter) for 14 AWG (2.1 mm^2) supply circuit conductors; and

b) Not smaller than 10 (4.8 mm^2 diameter) for 12, 10, or 8 AWG (3.3, 5.3, or 8.3 mm^2) supply circuit conductors.

14.2.6 A terminal plate for a wire-binding screw shall be of metal not less than 0.050 inch (1.27 mm) in thickness and shall have not less than two full threads in the metal, except that a plate not less than 0.030 inch (0.76 mm) in thickness is acceptable for 14 AWG (2.1 mm^2) conductors.

14.2.7 A terminal plate formed from stock having the minimum required thickness, as given in 14.2.6, may have the metal extruded at the tapped hole to provide two full threads for the binding screw.

14.2.8 A field-wiring terminal shall be prevented from turning or shifting in position by means other than friction between surfaces. This may be accomplished by such means as two screws or rivets; by square shoulders or mortises; by a dowel pin, lug, or offset; or by a connecting strap or clip fitted into an adjacent part.

14.2.9 A wire-binding screw shall thread into metal.

14.2.10 A field-wiring terminal for the connection of a grounded conductor shall be identified by means of a metallic-plated coating, substantially white in color, and shall be distinguishable from the other terminals; or identification of the terminal for the connection of the ground conductor shall be shown in some other manner, such as on an attached wiring diagram.

UL COPYRIGHTED MATERIAL –
NOT AUTHORIZED FOR FURTHER REPRODUCTION OR
DISTRIBUTION WITHOUT PERMISSION FROM UL

Documents
Document Sharing Hub

Copyright UL
Provided by IHS under license with UL
No reproduction or networking permitted without license from IHS
Full document details: UL 541 2011

Licensee=North Carolina State Univ/5618801100
Not for Resale, 07/06/2013 19:32:09 MDT

14.3 Leads

14.3.1 Leads intended for connection to any external high-voltage circuit or to an external low-voltage circuit that contain one or more of the components specified in 51.3 shall comply with all of the following:

a) Be one of the types of wiring specified in 17.1.2;

b) Be 6 inches (152 mm) or more in length, as measured from the lead end to the strain relief means, unless the use of a shorter lead is required to prevent damage to the lead insulation;

c) Be provided with strain relief if stress on the lead may be transmitted to terminals, splices, or internal wiring. Leads shall comply with 86.1 when subjected to a direct pull of 20 pounds-force (89 N);

d) Not be connected to wire binding screws or pressure wire connectors located in the same compartment as the lead ends (that are intended for spliced connections to the field-wiring) unless the screws or connectors are rendered unusable for field-wiring connections or the lead ends are insulated; and

e) Be insulated at the free end, if the lead will not be used in every installation and if the end can reduce spacings below the minimum acceptable values specified in High-Voltage Circuits, Section 50 for high-voltage circuits or Low-Voltage Circuits, Section 51 for low-voltage circuits.

14.3.2 A lead intended for the connection of a grounded conductor shall be finished to show a white or gray color, shall be distinguishable from other leads, and no other lead shall be so identified.

15 Supply Connections for Cord Connected Venders

15.1 A vender intended for cord connection to the power supply shall be equipped with a flexible non-detachable power supply cord having an equipment grounding conductor and with a grounding-type attachment plug.

15.1 effective January 24, 2014

15.2 With reference to 15.1, a power supply cord and plug shall comply with the Standard for Cord Sets and Power Supply Cords, UL 817.

15.3 A cord-connected vender shall be provided with a factory installed ground-fault circuit-interrupter (GFCI).

15.4 The GFCI shall comply with the Standard for Ground Fault Circuit Interrupters, UL 943, and be either:

a) An integral part of the attachment plug; or

b) Located such that it is in the supply cord within 12 in (305 mm) of the attachment plug.

UL COPYRIGHTED MATERIAL –
NOT AUTHORIZED FOR FURTHER REPRODUCTION OR
DISTRIBUTION WITHOUT PERMISSION FROM UL

Documents
Document Sharing Hub

Copyright UL
Provided by IHS under license with UL
No reproduction or networking permitted without license from IHS
Full document details: UL 541 2011

Licensee=North Carolina State Univ/5618801100
Not for Resale, 07/06/2013 19:32:09 MDT

15.5 The GFCI on a vender intended for outdoor use shall be rated for outdoor use.

15.6 The rating of the attachment-plug shall be not less than 125 percent of the marked rating of the vender and not less than the total current measured during the Temperature and Pressure Tests, Section 63. The total current shall include the current drawn by accessories intended for use with the vender.

15.7 Except as specified in 15.8, the grounding-type attachment-plug shall comply with the ANSI designation as specified in Table 15.1 based on the vender voltage and ampere rating.

Table 15.1
Attachment-plug rating

Amperes	Volts	ANSI designation[a]
15	125	5-15
20	125	5-20
30	125	5-30
15	250	6-15
20	250	6-20
30	250	6-30

[a] Designations in accordance with Standard For Wiring Devices – Dimensional Requirements, ANSI/NEMA WD6

15.8 With reference to 15.7, if the grounding-type attachment plug does not comply with the ANSI designation specified in Table 15.1, then the equipment shall be rated 250 V or less and shall be intended for connection to circuits rated for other than:

a) 60 Hz; and/or

b) The voltages specified in the first column of Table 60.1.

15.9 A cord connected vender shall use a Type S, SE, SEO, SJ, SJE, SJEO, SJO, SJOO, SJT, SJTO, SJTOO, SO, SOO, ST, STO, SJO, or STOO power supply cord as specified in the National Electrical Code, ANSI/NFPA 70. The voltage rating of the power supply cord shall not be less than the rated voltage of the vender. The ampacity of the power supply cord shall be the higher of the values specified in 15.10.

15.10 With reference to 15.9:

a) If a vender is intended for connection to a branch circuit that exceeds the ratings specified in 29.3.2, the ampacity of the power supply cord shall not be less than 80 percent of the maximum continuous current of the motor-compressor determined in accordance with Protective Devices – Maximum Continuous Current Test, Section 82, plus the sum of all other loads, including accessories, which may operate concurrently.

b) The ampacity of the power supply cord shall not be less than the current measured in the Temperature and Pressure Tests, Section 63.

Exception: The ampacity of the power supply cord need not be greater than the ampere rating of the attachment plug.

UL COPYRIGHTED MATERIAL –
NOT AUTHORIZED FOR FURTHER REPRODUCTION OR
DISTRIBUTION WITHOUT PERMISSION FROM UL

Documents
Document Sharing Hub

Copyright UL
Provided by IHS under license with UL
No reproduction or networking permitted without license from IHS
Full document details: UL 541 2011

Licensee=North Carolina State Univ/5618801100
Not for Resale, 07/06/2013 19:32:09 MDT

15.11 The power supply cord for a vender intended for outdoor use shall be one of the types specified in 15.9 and marked on the jacket with the designation of ″W″ following the cord type designation.

15.12 The length of the power supply cord shall be not more than 10 feet (3.0 m) and not less than 6 feet (1.83 m). The length shall be measured between the attachment plug and any point at which the cord exits the vender cabinet or the last strain relief, whichever is shorter.

15.13 The edges of the entry hole for the power supply cord, including the cord entry hole in a bushing if a bushing is provided, shall be smooth and rounded, without burrs, fins, or sharp edges which might damage the cord insulation.

15.14 The power supply cord shall be provided with strain relief means so that a strain on the cord will not be transmitted to terminals, splices, or internal wiring. The strain relief means shall comply with 86.1 when subjected to a direct pull of 35 pounds-force (156 N).

15.15 If a flexible cord is capable of being pushed into the vender through the cord-entry hole, any such displacement shall not result in the conditions specified in (a) – (d). Compliance shall be determined in accordance with Push-Back Strain-Relief Test, Section 87:

a) Mechanical damage to the cord;

b) Exposing the cord to a temperature higher than that for which it is rated;

c) Reducing spacings, such as to a metal strain-relief clamp, below the minimum required values; or

d) Damaging internal connections or components.

15.16 Except as specified in 15.17, if an accessory is powered from a source of supply separate from that supplying a cord-connected vender, disconnection of any one power-supply cord shall automatically cause de-energization of all circuits within the vender and accessory.

15.17 With reference to 15.16, if a vender does not automatically de-energize all circuits, then the vender shall be provided with the marking specified in 98.9.

15.18 The power supply cord shall be provided with an equipment grounding conductor terminating within the equipment. The supply cord equipment grounding conductor shall be:

a) Finished with a continuous green color or with a continuous green color with one or more yellow stripes, and no other conductor shall be so identified;

b) Secured to the frame or enclosure of the equipment by a positive means that is not likely to be removed during any servicing operation not involving the power supply cord. A sheet metal screw or quick-connect terminal shall not be used; and

c) Connected to the grounding blade of the attachment plug.

UL COPYRIGHTED MATERIAL –
NOT AUTHORIZED FOR FURTHER REPRODUCTION OR
DISTRIBUTION WITHOUT PERMISSION FROM UL

Documents
Document Sharing Hub

Copyright UL
Provided by IHS under license with UL
No reproduction or networking permitted without license from IHS
Full document details: UL 541 2011

Licensee=North Carolina State Univ/5618801100
Not for Resale, 07/06/2013 19:32:09 MDT

16 Grounding and Bonding for Grounding

16.1 General

16.1.1 A vender shall have provision for the grounding of all exposed or accessible noncurrent carrying metal parts which may be contacted by the user or by route and service personnel during service operations which are likely to be performed when the vender is energized.

16.1.2 Except as specified in 16.1.3, uninsulated metal parts of cabinets, electrical enclosures, motor frames and mounting brackets, controller mounting brackets, capacitors and other electrical components, interconnecting tubing and piping, valves and other refrigerant containing parts, plumbing accessories, and the like, shall be bonded for grounding if they may be contacted by the user, route person, or service person.

16.1.3 Metal parts as described below need not comply with the requirement of 16.1.1.

a) Adhesive attached metal foil markings, screws, handles, and the like, which are located on the outside of enclosures or cabinets and isolated from electrical components or wiring by grounded metal parts so that they are not likely to become energized.

b) Isolated metal parts, such as magnet frames and armatures or small assembly screws, which are positively separated from wiring and uninsulated live parts.

c) Panels and covers which do not enclose uninsulated live parts if wiring is positively separated from the panel or cover so that it is not likely to become energized.

d) Panels and covers which are insulated from electrical components and wiring by an insulating barrier of vulcanized fiber, varnished cloth, phenolic composition, or similar materials at least 0.028 inch (0.71 mm) thick, and secured in place.

16.1.4 Metal-to-metal hinge bearing members may be considered as a means for bonding the door for grounding.

16.1.5 A separate component bonding conductor shall be of copper, a copper alloy, or other material suitable for use as an electrical conductor. A separate bonding conductor or strap shall:

a) Be protected from mechanical damage or be located within the confines of the outer enclosure or frame; and

b) Not be secured by a removable fastener used for any purpose other than bonding for grounding unless the bonding conductor is unlikely to be omitted after removal and replacement of the fastener.

16.1.6 The bonding shall be by a positive means, such as by clamping, riveting, bolted or screwed connection, or by welding, soldering, or brazing with materials having a softening or melting point greater than 455°C (850°F). The bonding connection shall penetrate nonconductive coatings, such as paint or vitreous enamel. Bonding around a resilient mount shall not depend on the clamping action of rubber or similar material.

Exception: A connection that depends upon the clamping action exerted by rubber or similar material may be acceptable if it complies with 16.1.8 under any normal degree of compression permitted by a variable clamping device and if the results are still acceptable after exposure to the effects of oil, grease,

UL COPYRIGHTED MATERIAL –
NOT AUTHORIZED FOR FURTHER REPRODUCTION OR
DISTRIBUTION WITHOUT PERMISSION FROM UL
Documents
Document Sharing Hub
Copyright UL
Provided by IHS under license with UL
No reproduction or networking permitted without license from IHS
Full document details: UL 541 2011
Licensee=North Carolina State Univ/5618801100
Not for Resale, 07/06/2013 19:32:09 MDT

moisture, and thermal degradation which may occur in service. Also, the effect of assembling and disassembling, for maintenance purposes, such a clamping device is to be considered with particular emphasis on the likelihood of the clamping device being reassembled in its intended position.

16.1.7 If the adequacy of a bonding connection cannot be determined by examination, it shall be considered acceptable if the connecting means does not open when tested as described in 16.1.8.

16.1.8 With reference to 16.1.7, 16.2.1, and 16.3.1 a bonding connection or a bonding conductor shall be considered acceptable if it does not open:

a) When carrying twice the current equal to the rating of the branch circuit overcurrent device for the interval indicated in Table 16.1; and

b) In a short circuit test in series with a fuse of proper rating. See Limited Short Circuit Test, Section 81.

Table 16.1
Current overload test

Rating of overcurrent protection device amperes	Minimum duration of current flow minutes
30 or less	2
31 – 60	4
61 – 100	6

16.1.9 A bonding conductor to a component or electrical enclosure is not required to be larger than the size of the conductors supplying power to the component or components within the enclosure.

16.1.10 If more than one size branch circuit overcurrent device is involved, the size of the bonding conductor is to be based on the rating of the overcurrent device intended to provide ground-fault protection for the component bonded by the conductor. For example, if a motor is individually protected by a branch circuit overcurrent device smaller than other overcurrent devices used with the equipment, a bonding conductor for that motor is sized on the basis of the overcurrent device intended for ground-fault protection of the motor.

16.1.11 The following are considered to constitute means for grounding:

a) In a permanently connected vender, an equipment grounding terminal or lead;

b) In a cord connected vender – an equipment-grounding conductor in the cord.

UL COPYRIGHTED MATERIAL –
NOT AUTHORIZED FOR FURTHER REPRODUCTION OR
DISTRIBUTION WITHOUT PERMISSION FROM UL
Documents
Document Sharing Hub
Copyright UL
Provided by IHS under license with UL
No reproduction or networking permitted without license from IHS
Full document details: UL 541 2011
Licensee=North Carolina State Univ/5618801100
Not for Resale, 07/06/2013 19:32:09 MDT

16.2 Cord connected venders

16.2.1 On a cord connected vender, a bonding conductor or strap shall have a cross-sectional area not less than that of the grounding conductor of the supply cord.

Exception: A smaller conductor may be used if the bonding conductor and connection do not open when tested as described in 16.1.8.

16.3 Permanently connected venders

16.3.1 On a permanently connected vender, the size of a conductor or strap employed to bond an electrical enclosure or motor frame shall be based on the rating of the branch circuit overcurrent device to which the equipment will be connected. Except as indicated in 16.1.8, the size of the conductor or strap shall be in accordance with Table 16.2.

Table 16.2
Bonding wire conductor size

Rating of overcurrent device, amperes	Size of Bonding Conductor[a]			
	Copper Wire		Aluminum Wire	
	AWG	(mm^2)	AWG	(mm^2)
15	14	(2.1)	12	(3.3)
20	12	(3.3)	10	(5.3)
30	10	(5.3)	8	(8.4)
40	10	(5.3)	8	(8.4)
60	10	(5.3)	8	(8.4)
100	8	(8.4)	6	(13.3)

[a] Or equivalent cross-sectional area.

16.3.2 On permanently connected venders, a terminal solely for connection of an equipment-grounding conductor shall be capable of securing a conductor of the size applicable for the application, in accordance with the National Electrical Code, ANSI/NFPA 70.

16.3.3 On a permanently connected vender, a wire-binding screw intended for the connection of an equipment grounding conductor shall have a green-colored head that is hexagonal, slotted, or both. A pressure wire connector intended for connection of such a conductor shall be plainly identified, such as by being marked G, GR, GROUND, GROUNDING, or the like, or by the symbol

UL COPYRIGHTED MATERIAL –
NOT AUTHORIZED FOR FURTHER REPRODUCTION OR
DISTRIBUTION WITHOUT PERMISSION FROM UL

Documents
Document Sharing Hub

Copyright UL
Provided by IHS under license with UL
No reproduction or networking permitted without license from IHS
Full document details: UL 541 2011

Licensee=North Carolina State Univ/5618801100
Not for Resale, 07/06/2013 19:32:09 MDT

or by a marking on a wiring diagram provided on the vender. The wire-binding screw or pressure wire connector shall be secured to the frame or enclosure of the vender and shall be so located that it is unlikely to be removed during servicing of the vender.

16.3.4 On permanently connected venders, the surface of an insulated lead intended solely for the connection of an equipment grounding conductor shall be finished a continuous green color or a continuous green color with one or more yellow stripes, and no other lead shall be so identified.

17 Internal Wiring and Wiring Methods

17.1 General

17.1.1 Wiring shall have insulation rated for the potential involved and the temperatures to which it may be subjected. Compliance shall be determined in accordance with any of the following:

a) Wiring temperatures shall be evaluated on the basis of the temperatures measured during the applicable temperature tests specified in Temperature and Pressure Tests, Section 63 and Heating Test, Section 65.

b) Other than motor wiring, all wiring shall:

1) Have an ampacity of the conductors in accordance with Table 17.1; and

2) Not be exposed to heat from radiating sources or heated components.

c) Motor wiring shall have an ampacity not less than 125 percent of the motor full load current rating in addition to complying with (b).

17.1.2 Wiring shall comply with one of the following:

a) Standard for Appliance Wiring Material, UL 758;

b) Standard for Thermoset-Insulated Wires and Cables, UL 44;

c) Standard for Flexible Cords and Cables, UL 62; or

d) Standard for Thermoplastic-Insulated Wires and Cables, UL 83.

17.1.3 Except as specified in 17.1.4 or 17.1.5, conductor insulation shall be neoprene, thermoplastic or rubber not less than 1/16 inch (1.6 mm) for 16 AWG (1.3 mm^2) and smaller conductors, and 5/64 inch (1.98 mm) for 14, 12 or 10 AWG (2.1, 3.3 or 5.3 mm^2) conductors.

UL COPYRIGHTED MATERIAL –
NOT AUTHORIZED FOR FURTHER REPRODUCTION OR
DISTRIBUTION WITHOUT PERMISSION FROM UL

Documents
Document Sharing Hub

Copyright UL
Provided by IHS under license with UL
No reproduction or networking permitted without license from IHS
Full document details: UL 541 2011

Licensee=North Carolina State Univ/5618801100
Not for Resale, 07/06/2013 19:32:09 MDT

17.1.4 Wiring with neoprene or thermoplastic conductor insulation not complying with 17.1.3 shall have insulation not less than 1/32 inch (0.8 mm) thick. In addition such wiring shall be:

a) Contained within a separate metal enclosure, conduit, electrical metallic tubing, metal raceways, or the equivalent;

b) Contained within insulating tubing complying with the Standard for Extruded Insulating Tubing, UL 224 and having a wall thickness not less than 0.028 inch (0.71 mm); or

c) Not longer than 3 inches (76.2 mm) and intended to facilitate connection to electrical components. Such wiring shall be protected against damage by its location or routing; or

d) Arranged so that the wires are:

1) Not subjected to movement by air or vibration;

2) Secured at intervals and bunched together to form a cable;

3) Routed in a manner to prevent hooking by a route or service person, including being located away from reset buttons, test switches, or similar components;

4) Located in a compartment which is provided with a complete base pan or similar bottom closure;

5) Routed to prevent contact through openings in the outer enclosure or cabinet in accordance with 13.3.14(a)(1) and 13.3.14(b); and

6) Not routed between stationary and movable parts.

17.1.5 Wiring with rubber insulation not complying with 17.1.3 shall be not less than 3/64 inch (1.2 mm) thick. In addition such wiring shall comply with 17.1.4(a), (b), or (c).

17.1.6 Wiring which is color coded green or green with one or more yellow stripes shall be used only for grounding conductors. Wiring used for other purposes shall not be identified with the above color codes.

17.1.7 Wire positioning devices shall comply with the Standard for Positioning Devices, UL 1565.

17.1.8 The insulation of wires or cords connected to fan motors and other auxiliary motors shall be of an oil resistant type, such as Types SJO, SJT, and SJTO, or appliance wiring materials having oil resistant insulation.

UL COPYRIGHTED MATERIAL –
NOT AUTHORIZED FOR FURTHER REPRODUCTION OR
DISTRIBUTION WITHOUT PERMISSION FROM UL

Documents
Document Sharing Hub

Copyright UL
Provided by IHS under license with UL
No reproduction or networking permitted without license from IHS
Full document details: UL 541 2011

Licensee=North Carolina State Univ/5618801100
Not for Resale, 07/06/2013 19:32:09 MDT