UL 561

Floor-Finishing Machines

UL COPYRIGHTED MATERIAL –
NOT AUTHORIZED FOR FURTHER REPRODUCTION OR
DISTRIBUTION WITHOUT PERMISSION FROM UL

Documents
Document Sharing Hub

Full document details: UL 561 2008

UL COPYRIGHTED MATERIAL –
NOT AUTHORIZED FOR FURTHER REPRODUCTION OR
DISTRIBUTION WITHOUT PERMISSION FROM UL

Documents
Document Sharing Hub

Full document details: UL 561 2008

Underwriters Laboratories Inc. (UL)
333 Pfingsten Road
Northbrook, IL 60062-2096

UL Standard for Safety for Floor-Finishing Machines, UL 561

Sixth Edition, Dated April 13, 2007

Revisions: This Standard contains revisions through and including February 8, 2008

SUMMARY OF TOPICS

This revision of UL 561 is being issued to delete a reference to obsolete Type AF wire from the 12.7 requirement in Internal Wiring, Section 12.

UL Standards for Safety are developed and maintained in the Standard Generalized Markup Language (SGML). SGML -- an international standard (ISO 8879-1986) -- is a descriptive markup language that describes a document's structure and purpose, rather than its physical appearance on a page. Due to formatting differences resulting from the use of UL's new electronic publishing system, please note that additional pages (on which no requirements have been changed) may be included in revision pages due to relocation of existing text and reformatting of the Standard.

Text that has been changed in any manner is marked with a vertical line in the margin. Changes in requirements are marked with a vertical line in the margin and are followed by an effective date note indicating the date of publication or the date on which the changed requirement becomes effective.

The revised requirements are substantially in accordance with UL's Proposal(s) on this subject dated November 27, 2007.

The revisions dated February 8, 2008 include a reprinted title page (page1) for this Standard.

As indicated on the title page (page1), this UL Standard for Safety has been adopted by the Department of Defense.

The UL Foreword is no longer located within the UL Standard. For information concerning the use and application of the requirements contained in this Standard, the current version of the UL Foreword is located on ULStandardsInfoNet at: http://ulstandardsinfonet.ul.com/ulforeword.html

The master for this Standard at UL's Northbrook Office is the official document insofar as it relates to a UL service and the compliance of a product with respect to the requirements for that product and service, or if there are questions regarding the accuracy of this Standard.

UL's Standards for Safety are copyrighted by UL. Neither a printed copy of a Standard, nor the distribution diskette for a Standard-on-Diskette and the file for the Standard on the distribution diskette should be altered in any way. All of UL's Standards and all copyrights, ownerships, and rights regarding those Standards shall remain the sole and exclusive property of UL.

All rights reserved. No part of this publication may be reproduced, stored in a retrieval system, or transmitted in any form by any means, electronic, mechanical photocopying, recording, or otherwise without prior permission of UL.

Revisions of UL Standards for Safety are issued from time to time. A UL Standard for Safety is current only if it incorporates the most recently adopted revisions.

UL COPYRIGHTED MATERIAL –
NOT AUTHORIZED FOR FURTHER REPRODUCTION OR
DISTRIBUTION WITHOUT PERMISSION FROM UL

Documents
Document Sharing Hub

Full document details: UL 561 2008

UL provides this Standard ″as is″ without warranty of any kind, either expressed or implied, including but not limited to, the implied warranties of merchantability or fitness for any purpose.

In no event will UL be liable for any special, incidental, consequential, indirect or similar damages, including loss of profits, lost savings, loss of data, or any other damages arising out of the use of or the inability to use this Standard, even if UL or an authorized UL representative has been advised of the possibility of such damage. In no event shall UL's liability for any damage ever exceed the price paid for this Standard, regardless of the form of the claim.

UL will attempt to answer support requests concerning electronic versions of its Standards. However, this support service is offered on a reasonable efforts basis only, and UL may not be able to resolve every support request. UL supports the electronic versions of its Standards only if they are used under the conditions and operating systems for which it is intended. UL's support policies may change from time-to-time without notification.

UL reserves the right to change the format, presentation, file types and formats, delivery methods and formats, and the like of both its printed and electronic Standards without prior notice.

Purchasers of the electronic versions of UL's Standards for Safety agree to defend, indemnify, and hold UL harmless from and against any loss, expense, liability, damage, claim, or judgement (including reasonable attorney's fees) resulting from any error or deviation introduced while purchaser is storing an electronic Standard on the purchaser's computer system.

If a single-user version electronic Standard was purchased, one copy of this Standard may be stored on the hard disk of a single personal computer, or on a single LAN file-server or the permanent storage device of a multiple-user computer in such a manner that this Standard may only be accessed by one user at a time and for which there is no possibility of multiple concurrent access.

If a multiple-user version electronic Standard was purchased, one copy of the Standard may be stored on a single LAN file-server, or on the permanent storage device of a multiple-user computer, or on an Intranet server. The number of concurrent users shall not exceed the number of users authorized.

Electronic Standards are intended for on-line use, such as for viewing the requirements of a Standard, conducting a word search, and the like. Only one copy of the Standard may be printed from each single-user version of an electronic Standard. Only one copy of the Standard may be printed for each authorized user of a multiple-user version of an electronic Standard. Because of differences in the computer/software/printer setup used by UL and those of electronic Standards purchasers, the printed copy obtained by a purchaser may not look exactly like the on-line screen view or the printed Standard.

An employee of an organization purchasing a UL Standard can make a copy of the page or pages being viewed for their own fair and/or practical internal use.

The requirements in this Standard are now in effect, except for those paragraphs, sections, tables, figures, and/or other elements of the Standard having future effective dates as indicated in the note following the affected item. The prior text for requirements that have been revised and that have a future effective date are located after the Standard, and are preceded by a ″SUPERSEDED REQUIREMENTS″ notice.

New product submittals made prior to a specified future effective date will be judged under all of the requirements in this Standard including those requirements with a specified future effective date, unless the applicant specifically requests that the product be judged under the current requirements. However, if

UL COPYRIGHTED MATERIAL –
NOT AUTHORIZED FOR FURTHER REPRODUCTION OR
DISTRIBUTION WITHOUT PERMISSION FROM UL

Documents
Document Sharing Hub

Full document details: UL 561 2008

the applicant elects this option, it should be noted that compliance with all the requirements in this Standard will be required as a condition of continued Listing and Follow-Up Services after the effective date, and understanding of this should be signified in writing.

Copyright © 2008 Underwriters Laboratories Inc.

This Standard consists of pages dated as shown in the following checklist:

Page	Date
1	February 8, 2008
2-18	April 13, 2007
19	February 8, 2008
20-60	April 13, 2007
A1-A2	February 8, 2008

UL COPYRIGHTED MATERIAL –
NOT AUTHORIZED FOR FURTHER REPRODUCTION OR
DISTRIBUTION WITHOUT PERMISSION FROM UL

Documents
Document Sharing Hub

Full document details: UL 561 2008

No Text on This Page

UL COPYRIGHTED MATERIAL –
NOT AUTHORIZED FOR FURTHER REPRODUCTION OR
DISTRIBUTION WITHOUT PERMISSION FROM UL
Documents
Document Sharing Hub
Full document details: UL 561 2008

APRIL 13, 2007
(Title Page Reprinted: February 8, 2008)

UL 561

Standard for Floor-Finishing Machines

First Edition – July, 1974
Second Edition – September, 1979
Third Edition – April, 1987
Fourth Edition – May, 1993
Fifth Edition – May, 1997

Sixth Edition

April 13, 2007

An effective date included as a note immediately following certain requirements is one established by Underwriters Laboratories Inc.

The Department of Defense (DoD) has adopted UL 561 on March 11, 1991. The publication of revised pages or a new edition of this Standard will not invalidate the DoD adoption.

Revisions of this Standard will be made by issuing revised or additional pages bearing their date of issue. A UL Standard is current only if it incorporates the most recently adopted revisions, all of which are itemized on the transmittal notice that accompanies the latest set of revised requirements. Comments or proposals for revisions on any part of the Standard may be submitted to UL at any time. Proposals should be submitted via a Proposal Request in UL's On-Line Collaborative Standards Development System (CSDS) at http://csds.ul.com.

COPYRIGHT © 1974, 2008 UNDERWRITERS LABORATORIES INC.

UL COPYRIGHTED MATERIAL –
NOT AUTHORIZED FOR FURTHER REPRODUCTION OR
DISTRIBUTION WITHOUT PERMISSION FROM UL

Documents
Document Sharing Hub

Full document details: UL 561 2008

No Text on This Page

UL COPYRIGHTED MATERIAL –
NOT AUTHORIZED FOR FURTHER REPRODUCTION OR
DISTRIBUTION WITHOUT PERMISSION FROM UL

Documents
Document Sharing Hub

Full document details: UL 561 2008

CONTENTS

INTRODUCTION

1 Scope 6
2 General 6
2.1 Terminology 6
2.2 Components 6
2.3 Units of measurement 7
2.4 Undated references 7
3 Glossary 7

ALL APPLIANCES

CONSTRUCTION

4 Frame and Enclosure 8
5 Accessibility of Uninsulated Live Parts, Film-Coated Wire, and Moving Parts 9
6 Mechanical Assembly 13
7 Resistance to Corrosion 14
8 Supply Connections 14
9 Strain Relief 16
10 Bushings 17
11 Live Parts 18
12 Internal Wiring 18
13 Insulating Material 20
14 Motors and Motor Protection 20
15 Motor Circuit Overload Protection 20
16 Switches and Controls 21
17 Capacitors 21
18 Lampholders 22
19 Receptacles 22
20 Spacings 22
21 Grounding 25
22 Reduction of Risk of Injury to Persons 26

PERFORMANCE

23 Leakage Current Test 26
24 Leakage Current Test After Humidity Conditioning 29
25 Starting Current Test 30
26 Input Test 30
27 Temperature Test 30
27.1 General 30
27.2 Maximum intended load 34
28 Dielectric Voltage-Withstand Test 34
29 Strain Relief Test 35
30 Push-Back Relief Test 35
31 Flooding Test 36
31.1 General 36
31.2 Component malfunction or breakdown 36
31.3 Wet pick-up 37

UL COPYRIGHTED MATERIAL –
NOT AUTHORIZED FOR FURTHER REPRODUCTION OR
DISTRIBUTION WITHOUT PERMISSION FROM UL
Documents
Document Sharing Hub
Full document details: UL 561 2008

31.4 Wet scrubbing 37
31.5 Overflow 37
31.6 Polymeric water-handling components 37
31.7 Impact test for polymeric reservoirs 38
31.8 Temperature stability test for polymeric reservoirs 38
32 Cord Reel Flexing Test 38
33 Abnormal Operation Test 39
33.1 General 39
33.2 Locked rotor 39
33.3 Overcurrent 39
34 Overload Test 40
35 Permanence of Marking Test 40
35.1 General 40
35.2 Oven-aging test 41
35.3 Standard-atmosphere test 41

MANUFACTURING AND PRODUCTION TESTS

36 Production-Line Dielectric Voltage-Withstand Test 41
37 Production-Line Grounding Continuity Test 43

MARKINGS

38 General 43

PACKING AND SHIPMENT

39 Safety Instructions 45

DOUBLE-INSULATED PRODUCTS

GENERAL

40 Scope 47
41 Glossary 47

CONSTRUCTION

42 Insulation 47
43 Enclosure 49
43.1 General 49
43.2 Accessibility of live parts 49
44 Supply Connections 49
45 Grounding 50
46 Internal Wiring 50
47 Capacitors 51
48 Brush Caps 51
49 Commutators and Armature End Turns 51
50 Switches 52
51 Brush Holders 53
52 Spacings 53

UL COPYRIGHTED MATERIAL –
NOT AUTHORIZED FOR FURTHER REPRODUCTION OR
DISTRIBUTION WITHOUT PERMISSION FROM UL

Documents
Document Sharing Hub

Full document details: UL 561 2008

PERFORMANCE

53 Leakage Current Test 54
54 Insulation Resistance Test 54
55 Dielectric Voltage-Withstand Test 55
56 Resistance to Impact Test 56
57 Resistance to Heat Test 58
58 Overload Test 58
59 Armature Test 59

MANUFACTURING AND PRODUCTION TEST

60 Production-Line Dielectric Voltage-Withstand Test 59

MARKINGS

61 General 60

APPENDIX A

Standards for Components. A1

UL COPYRIGHTED MATERIAL –
NOT AUTHORIZED FOR FURTHER REPRODUCTION OR
DISTRIBUTION WITHOUT PERMISSION FROM UL
Documents
Document Sharing Hub
Full document details: UL 561 2008

INTRODUCTION

1 Scope

1.1 These requirements cover electrically powered floor-finishing machines to be used in accordance with the National Electrical Code, NFPA 70. This product category includes the following: a floor polisher, floor scrubber, floor sander, floor scraper, tile remover, rug shampooer, rug and floor washer, and a similar machine for commercial use. A machine such as a sander and wet scrubber with vacuum attachments is also covered.

1.2 These requirements do not cover vacuum cleaning machines, permanently connected machines, or cord-connected machines that are intended to be fastened in place or located in a dedicated space. These requirements do not cover machines rated more than 600 volts, nor do they cover machines involving universal motors rated more than 250 volts. These requirements do not cover floor finishing machines for household use, which are covered in the Standard for Vacuum Cleaners, Blower Cleaners, and Household Floor Finishing Machines, UL 1017/ CSA-C22.2 No. 243.

1.3 A machine that uses some other source of energy (such as gas or steam) in addition to electrical energy will be investigated under these requirements and under such additional requirements as applicable to the machine under consideration.

2 General

2.1 Terminology

2.1.1 In the following text, a requirement that applies to one type of equipment (polisher, scrubber, or the like) is identified by a specific reference in that requirement to the type of equipment involved. In the absence of such specific reference, or if the term product or machine is used, it is understood that the requirement applies to all types of equipment covered by the standard.

2.2 Components

2.2.1 Except as indicated in 2.2.2, a component of a product covered by this standard shall comply with the requirements for that component. See Appendix A for a list of standards covering components generally used in the products covered by this standard.

2.2.2 A component is not required to comply with a specific requirement that:

a) Involves a feature or characteristic not required in the application of the component in the product covered by this standard, or

b) Is superseded by a requirement in this standard.

2.2.3 A component shall be used in accordance with its rating established for the intended conditions of use.

UL COPYRIGHTED MATERIAL –
NOT AUTHORIZED FOR FURTHER REPRODUCTION OR
DISTRIBUTION WITHOUT PERMISSION FROM UL
Documents
Document Sharing Hub
Full document details: UL 561 2008

2.2.4 Specific components are incomplete in construction features or restricted in performance capabilities. Such components are intended for use only under limited conditions, such as certain temperatures not exceeding specified limits, and shall be used only under those specific conditions.

2.3 Units of measurement

2.3.1 Values stated without parentheses are the requirement. Values in parentheses are explanatory or approximate information.

2.3.2 Unless indicated otherwise, all voltage and current values mentioned in this standard are root mean square (rms).

2.4 Undated references

2.4.1 Any undated reference to a code or standard appearing in the requirements of this standard shall be interpreted as referring to the latest edition of that code or standard.

3 Glossary

3.1 For the purpose of this standard, the following definitions apply.

3.2 COMMERCIAL USE PRODUCT – A product not intended for use only in the home.

3.3 HAND-GUIDED PRODUCT – A portable product which during intended use is contacted by the hand of the user for purposes of electrical or physical control, but not for complete support.

3.4 HAND-SUPPORTED PRODUCT – A portable product that is completely supported by the user during the performance of its intended function. The hand of the user may also be used to exercise electrical or physical control of the operation of the product.

3.5 LINE-VOLTAGE CIRCUIT – A circuit involving a potential of not more than 600 volts and having circuit characteristics in excess of those of a low-voltage circuit.

3.6 LOW-VOLTAGE CIRCUIT – A circuit involving a peak open-circuit potential of not more than 42.4 volts supplied by a primary battery, by a Class 2 transformer, or by a combination of a transformer and a fixed impedance that, as a unit, complies with all performance requirements for a Class 2 transformer. A circuit derived from a line-voltage circuit by connecting a resistance in series with the supply circuit as a means of limiting the voltage and current is not considered to be a low-voltage circuit.

UL COPYRIGHTED MATERIAL –
NOT AUTHORIZED FOR FURTHER REPRODUCTION OR
DISTRIBUTION WITHOUT PERMISSION FROM UL
Documents
Document Sharing Hub
Full document details: UL 561 2008

ALL APPLIANCES

CONSTRUCTION

4 Frame and Enclosure

4.1 A product shall be formed and assembled so that it will have the strength and rigidity needed to resist the abuses to which it is likely to be subjected, without increasing the risk of fire, electric shock, or injury to persons due to total or partial collapse with resulting reduction of spacings, loosening, or displacement of parts, or other serious defects.

4.2 A product shall be provided with an enclosure to house each part that may present a risk of fire, electric shock, or injury to persons under any condition of use.

4.3 The minimum thickness of cast metal shall be in accordance with Table 4.1.

Table 4.1
Minimum thicknesses of cast metal

Metal	Minimum thickness			
	At reinforced surfaces,[a]		At unreinforced flat surfaces,	
	inch	mm	inch	mm
Die-cast metal	3/64	1.2	5/64	2.0
Cast malleable iron	1/16	1.6	3/32	2.4
Other cast metal	3/32	2.4	1/8	3.2

[a] Includes surfaces that are curved, ribbed, and the like, or are otherwise of a shape or size to provide the mechanical strength required for the application.

4.4 An enclosure of sheet metal is judged with respect to its size, shape, and thickness, considering the intended use of the complete product.

4.5 Among the factors taken into consideration when judging a nonmetallic enclosure or an enclosure of magnesium are:

a) Mechanical strength,

b) Resistance to impact,

c) Moisture-absorptive properties,

d) Combustibility, and

e) Resistance to distortion at temperatures to which the material may be subjected under conditions of intended or unintended use.

4.6 The enclosure of a product for use in wet locations shall be such that water will not come into contact with uninsulated live parts when the product is subjected to a splash test or other test to simulate conditions that may occur during actual use.

UL COPYRIGHTED MATERIAL –
NOT AUTHORIZED FOR FURTHER REPRODUCTION OR
DISTRIBUTION WITHOUT PERMISSION FROM UL
Documents
Document Sharing Hub
Full document details: UL 561 2008

4.7 The door or cover of an enclosure shall be hinged or otherwise attached in an equivalent manner if:

a) It gives access to any overload protective device that may require replacement or

b) It is necessary to open the cover in connection with the operation of the protective device.

4.8 Means shall be provided for holding the door or cover over a fuseholder in a closed position, and the door or cover shall be tight fitting.

4.9 An edge, projection, or corner of an enclosure, opening, frame, guard, knob, handle, or the like, of a product shall not be sharp so as to cause a cut type injury when contacted during intended use or user maintenance.

5 Accessibility of Uninsulated Live Parts, Film-Coated Wire, and Moving Parts

5.1 To reduce the likelihood of unintentional contact that may involve a risk of electric shock from an uninsulated live part or film-coated wire or injury to persons from a moving part, an opening in an enclosure shall comply with either (a) or (b).

a) For an opening that has a minor dimension, as defined in 5.5, less than 1 inch (25.4 mm), such a part or wire shall not be contacted by the probe illustrated in Figure 5.1.

b) For an opening that has a minor dimension of 1 inch or more, such a part or wire shall be spaced from the opening as specified in Table 5.1.

Exception No. 1: A motor other than one used in either a hand-guided product or a hand-supported portion of a product need not comply with these requirements if the motor complies with the accessibility requirements in 5.2.

Exception No. 2: If a moving part as specified in these requirements is exposed for its intended function, the moving part need not be enclosed or guarded to reduce the likelihood of unintentional contact that may involve a risk of injury to persons.

5.2 With respect to a part or wire as specified in 5.1, in an integral enclosure of a motor as specified in Exception No. 1 to 5.1:

a) An opening that has a minor dimension, as defined in 5.5, less than 3/4 inch (19.1 mm) is acceptable if:

1) A moving part cannot be contacted by the probe illustrated in Figure 5.2;

2) Film-coated wire cannot be contacted by the probe illustrated in Figure 5.3;

3) In a directly accessible motor, as defined in 5.6, an uninsulated live part cannot be contacted by the probe illustrated in Figure 5.4; and

4) In an indirectly accessible motor, as defined in 5.6, an uninsulated live part cannot be contacted by the probe illustrated in Figure 5.2.

b) An opening that has a minor dimension of 3/4 inch or more is acceptable if a part or wire is spaced from the opening as specified in Table 5.1.

UL COPYRIGHTED MATERIAL –
NOT AUTHORIZED FOR FURTHER REPRODUCTION OR
DISTRIBUTION WITHOUT PERMISSION FROM UL
Documents
Document Sharing Hub
Full document details: UL 561 2008

5.3 The probes specified in 5.1 and 5.2 and illustrated in Figures 5.1 – 5.4 shall be applied to any depth that the opening will permit; and shall be rotated or angled before, during, and after insertion through the opening to any position that is necessary to examine the enclosure. The probes illustrated in Figures 5.1 and 5.4 shall be applied in any possible configuration; and, if necessary, the configuration shall be changed after insertion through the opening.

Table 5.1
Minimum distance from an opening to a part that may involve a risk of electric shock or injury to persons

Minor dimensions of opening,[a]		Minimum distance from opening to part,	
inches	mm[b]	inches	mm[b]
3/4[c]	19.1	4-1/2	114
1[c]	25.4	6-1/2	165
1-1/4	31.8	7-1/2	191
1-1/2	38.1	12-1/2	318
1-7/8	47.6	15-1/2	394
2-1/8	54.0	17-1/2	445
See footnote d		30	762

[a] The minor dimension of an opening is the diameter of the largest cylindrical probe having a hemispherical tip that can be inserted through the opening.
[b] Interpolation is to be used to determine a value between values specified in the table.
[c] Any dimension less than 1 inch applies to a motor only.
[d] More than 2-1/8 inches, but not more than 6 inches (152.4 mm).

5.4 The probes specified in 5.3 shall be used as measuring instruments to judge the accessibility provided by an opening, and not as instruments to judge the strength of a material. The probes shall be applied with the minimum force necessary to determine accessibility.

5.5 With reference to the requirements specified in 5.1 and 5.2, the minor dimension of an opening is the diameter of the largest cylindrical probe having a hemispherical tip that can be inserted through the opening.

5.6 With reference to the requirement specified in 5.2, an indirectly accessible motor is a motor that is accessible only by opening or removing a part of the outer enclosure, such as a guard or panel, which can be opened or removed without the use of tools, or is located at such a height or is otherwise guarded or enclosed so that it is unlikely to be contacted. A directly accessible motor is a motor that can be contacted without opening or removing any part or is located so as to be accessible to contact.

5.7 During the examination of a product to determine whether it complies with the requirements specified in 5.1 or 5.2, a part of the enclosure that may be opened or removed by the user without the use of tools (to attach an accessory, to make an operating adjustment, or for other reasons) is to be opened or removed.

Exception: A part of the enclosure that may be opened or removed by the user without the use of tools to provide access to moving parts (but not live parts) for normal user maintenance need not be opened or removed if the enclosure part is marked as specified in 38.11 and the instruction manual includes the statement specified in 39.3.

UL COPYRIGHTED MATERIAL –
NOT AUTHORIZED FOR FURTHER REPRODUCTION OR
DISTRIBUTION WITHOUT PERMISSION FROM UL
Documents
Document Sharing Hub
Full document details: UL 561 2008

Figure 5.1
Articulate probe with web stop

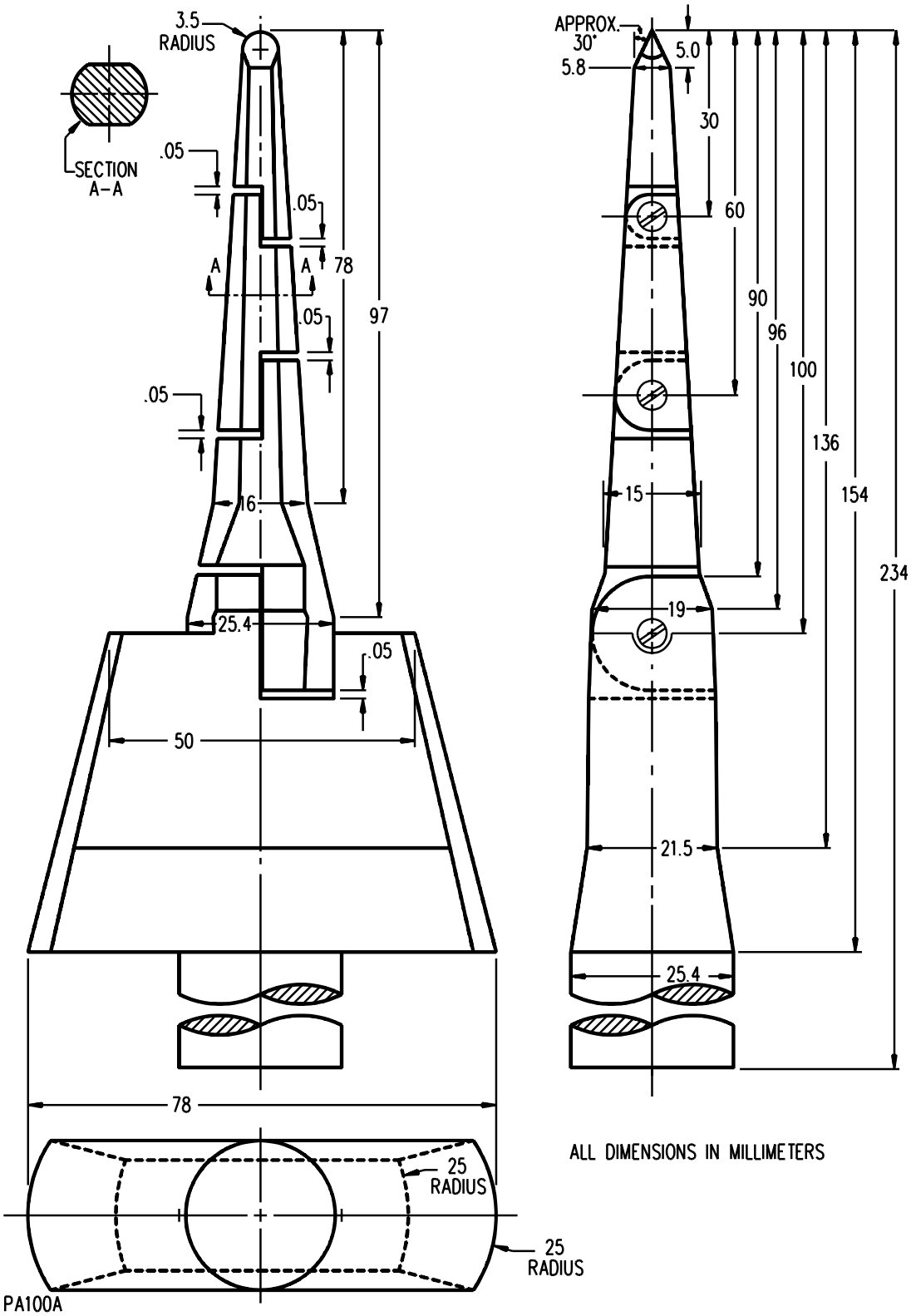

UL COPYRIGHTED MATERIAL –
NOT AUTHORIZED FOR FURTHER REPRODUCTION OR
DISTRIBUTION WITHOUT PERMISSION FROM UL

Documents
Document Sharing Hub

Figure 5.2
Probe for moving parts and uninsulated live parts

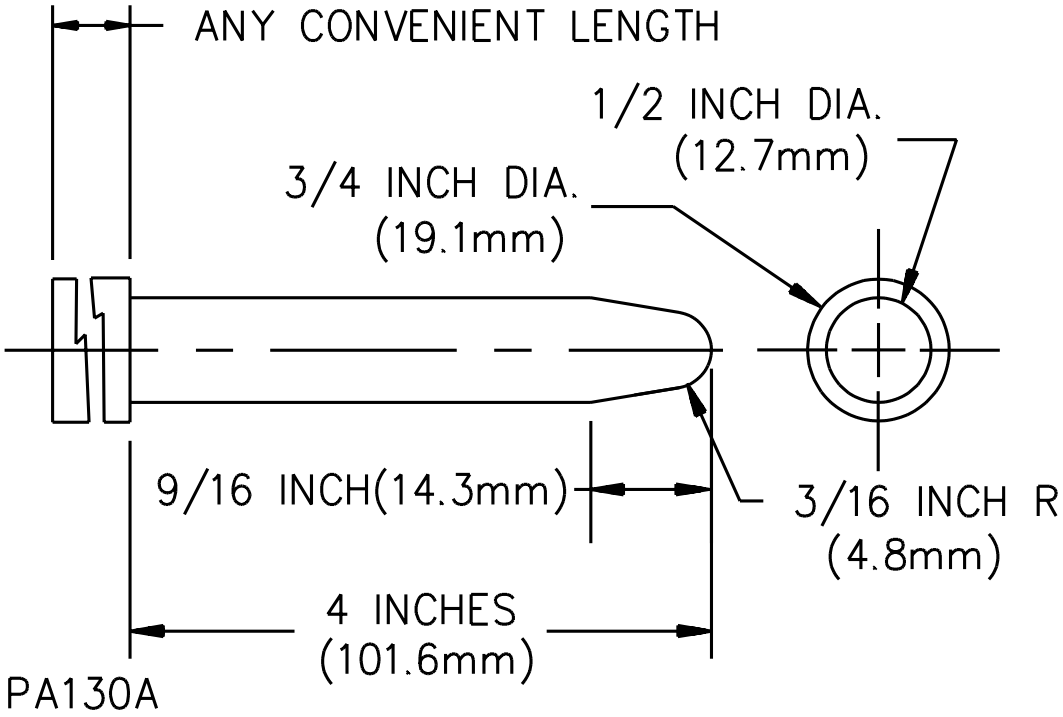

Figure 5.3
Probe for film-coated wire

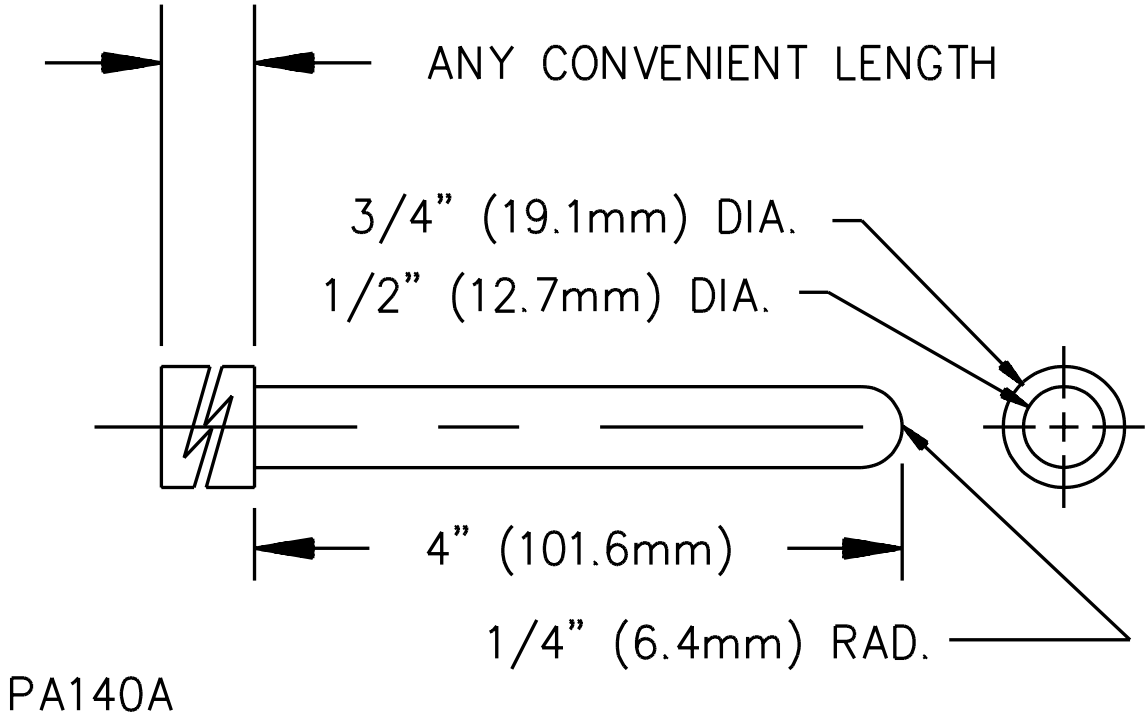

UL COPYRIGHTED MATERIAL –
NOT AUTHORIZED FOR FURTHER REPRODUCTION OR
DISTRIBUTION WITHOUT PERMISSION FROM UL
Documents
Document Sharing Hub
Full document details: UL 561 2008

Figure 5.4
IEC articulate probe

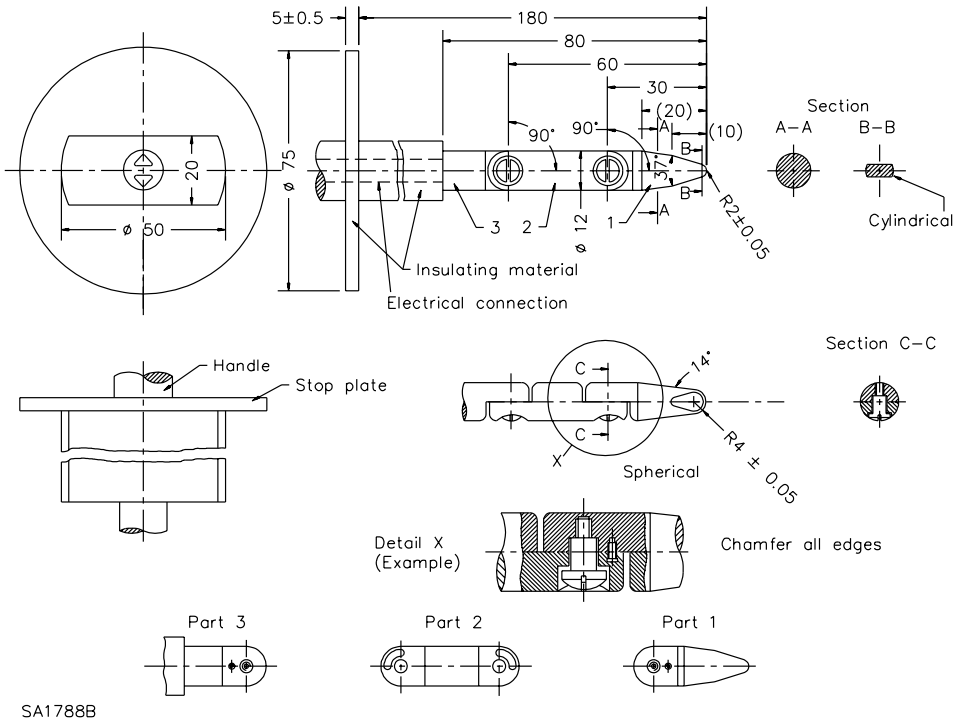

5.8 With reference to the requirements specified in 5.1 and 5.2, insulated brush caps are not required to be additionally enclosed.

6 Mechanical Assembly

6.1 The assembly of a product that involves a motor or other vibrating unit shall be such that the product will not be affected adversely by the vibration of intended operation. Brush caps shall be tightly threaded or otherwise constructed so that they will not loosen.

6.2 A switch (other than a through-cord switch), a lampholder, a receptacle, a motor-attachment plug, or similar component shall be mounted securely and shall be restricted from turning.

Exception No. 1: The requirement that a switch be restricted from turning can be waived if all of the following conditions are met:

a) The switch is of the plunger or other type that does not tend to rotate when operated (a toggle switch is considered to be subject to forces that tend to turn the switch during intended operation of the switch).

b) The means of mounting the switch is such that the operation of the switch is unlikely to result in the switch becoming loosened.

c) The spacings are not reduced below the minimum values specified in Table 20.1 if the switch does rotate.

UL COPYRIGHTED MATERIAL –
NOT AUTHORIZED FOR FURTHER REPRODUCTION OR
DISTRIBUTION WITHOUT PERMISSION FROM UL
Documents
Document Sharing Hub
Full document details: UL 561 2008

d) Intended operation of the switch is by mechanical means rather than by direct contact by persons.

Exception No. 2: A lampholder of the type in which the lamp cannot be replaced (such as a neon pilot or indicator light in which the lamp is sealed in by a nonremovable jewel) need not be restricted from turning if the rotation cannot reduce spacings below the minimum values specified in Table 20.1.

6.3 The means by which the turning specified in 6.2 is restricted is to include more than friction between surfaces. For example, a lock washer, properly applied, is acceptable as a means to restrict turning of a device having a single-hole mounting means.

6.4 A brush holder assembly shall be constructed so that when a brush is worn out – no longer able to perform its function– the brush, spring, and other parts of the assembly shall be retained to the degree that:

a) An accessible dead metal part does not become energized and

b) A live part does not become accessible.

7 Resistance to Corrosion

7.1 Iron and steel parts shall be made resistant to corrosion by painting, galvanizing, plating, or other equivalent means if the malfunction or breakdown of such unprotected parts would be likely to result in a risk of fire, electric shock, or injury to persons.

Exception: In certain instances in which the oxidation of iron or steel due to the exposure of the metal to air and moisture is not likely to be appreciable – thickness of metal and temperature also being factors– surfaces of sheet steel and cast iron parts within an enclosure may not be required to be made resistant to corrosion. The requirement does not apply to bearings, laminations, or minor parts of iron or steel, such as washers, screws, and the like.

7.2 A container for liquid shall be made resistant to the possible corrosive effect of the liquid intended to be used in the container.

8 Supply Connections

8.1 A product shall be provided with either a detachable or a nondetachable power supply cord not less than 15 feet (4.57 m) long, including fittings.

Exception: A product that complies with 8.6 need not comply with this requirement.

8.2 The power supply cord shall be rated for use at a voltage not less than the rated voltage of the product and shall have an ampacity not less than the current rating of the product.

8.3 The voltage rating of the attachment plug shall correspond to the voltage rating of the product and the ampacity of the attachment plug shall be not less than the current rating of the product. If the product may be field adapted for use with two or more different supply voltages, the attachment plug on the power supply cord provided with the product shall be rated for the supply voltage selected at the factory.

UL COPYRIGHTED MATERIAL –
NOT AUTHORIZED FOR FURTHER REPRODUCTION OR
DISTRIBUTION WITHOUT PERMISSION FROM UL
Documents
Document Sharing Hub
Full document details: UL 561 2008

8.4 The attachment plug shall be of a three-wire grounding type. The attachment plug connections shall comply with the three wire plug in Figure 8.1.

Exception: A double insulated product shall be provided with a power-supply cord that does not include a grounding conductor, and has a two-blade polarized attachment plug as shown in the two wire plug in Figure 8.1. See Supply Connections, Section 44. Also see 39.5.

Figure 8.1
Connection to attachment plug

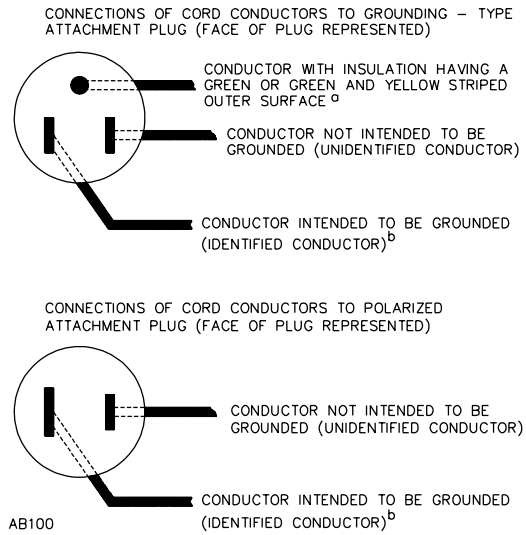

[a] In the above illustration, the blade to which the green conductor is connected may have a U-shaped or a circular cross section.

[b] Signifies a conductor identified in accordance with Table 8.1.

Table 8.1
Polarity identification of flexible cords

Method of identification	Acceptable combinations	
	Wire intended to be grounded[a]	All other wires
Color of braids on individual conductors	Solid white or gray – without tracer	Solid color other than white or gray – without tracer
Color of braids on individual conductors	Color other than white or gray, with tracer in braid	Solid color other than white or gray – without tracer
Color of insulation on individual conductors	Solid white or gray[b]	Solid color other than white or gray
Color of insulation on individual conductors	Light blue[c]	Solid color other than light blue, white, or gray
Other means	Tin or other white metal on all strands of the conductor	No tin or other white metal on the strands of the conductor

[a] A wire finished to show a green color with or without one or more yellow stripes or tracers is to be used as an equipment grounding conductor.
[b] Only for cords having no braid on any individual conductor.
[c] For jacketed cord.

UL COPYRIGHTED MATERIAL –
NOT AUTHORIZED FOR FURTHER REPRODUCTION OR
DISTRIBUTION WITHOUT PERMISSION FROM UL
Documents
Document Sharing Hub
Full document details: UL 561 2008