UL 60079-0

STANDARD FOR SAFETY

Explosive Atmospheres – Part 0: Equipment – General Requirements

This document is only permissible for use by Anonymous User of University of Toronto, 3/9/2020 12:39:45 PM

Documents
Document Sharing Hub

Full document details: UL 60079-0 2019

This document is only permissible for use by Anonymous User of University of Toronto. 3/9/2020 12:39:45 PM

UL COPYRIGHTED MATERIAL –
NOT AUTHORIZED FOR FURTHER REPRODUCTION OR
DISTRIBUTION WITHOUT PERMISSION FROM UL

Documents
Document Sharing Hub

UL Standard for Safety for Explosive Atmospheres – Part 0: Equipment – General Requirements, UL 60079-0

Seventh Edition, Dated March 26, 2019

Summary of Topics

This new edition of ANSI/UL 60079-0 is an adoption of IEC 60079-0, Explosive atmospheres – Part 0: Equipment – General requirements, (seventh edition issued by IEC December 2017) as a new IEC-based UL standard with US Differences.

The new requirements are substantially in accordance with Proposal(s) on this subject dated June 15, 2018 and November 30, 2018.

All rights reserved. No part of this publication may be reproduced, stored in a retrieval system, or transmitted in any form by any means, electronic, mechanical photocopying, recording, or otherwise without prior permission of UL.

UL provides this Standard "as is" without warranty of any kind, either expressed or implied, including but not limited to, the implied warranties of merchantability or fitness for any purpose.

In no event will UL be liable for any special, incidental, consequential, indirect or similar damages, including loss of profits, lost savings, loss of data, or any other damages arising out of the use of or the inability to use this Standard, even if UL or an authorized UL representative has been advised of the possibility of such damage. In no event shall UL's liability for any damage ever exceed the price paid for this Standard, regardless of the form of the claim.

Users of the electronic versions of UL's Standards for Safety agree to defend, indemnify, and hold UL harmless from and against any loss, expense, liability, damage, claim, or judgment (including reasonable attorney's fees) resulting from any error or deviation introduced while purchaser is storing an electronic Standard on the purchaser's computer system.

This document is only permissible for use by Anonymous User of University of Toronto. 3/9/2020 12:39:45 PM

UL COPYRIGHTED MATERIAL –
NOT AUTHORIZED FOR FURTHER REPRODUCTION OR
DISTRIBUTION WITHOUT PERMISSION FROM UL

Documents
Document Sharing Hub

Full document details: UL 60079-0 2019

No Text on This Page

This document is only permissible for use by Anonymous User of University of Toronto. 3/9/2020 12:39:45 PM

UL COPYRIGHTED MATERIAL –
NOT AUTHORIZED FOR FURTHER REPRODUCTION OR
DISTRIBUTION WITHOUT PERMISSION FROM UL

Documents
Document Sharing Hub

Full document details: UL 60079-0 2019

MARCH 26, 2019

ANSI/UL 60079-0-2019

UL 60079-0

Standard for Explosive Atmospheres – Part 0: Equipment – General Requirements

First Edition – December 2002
Second Edition – Not Printed
Third Edition – Not Printed
Fourth Edition – August 2005
Fifth Edition – October 2009
Sixth Edition – July 2013

Seventh Edition

March 26, 2019

This ANSI/UL Standard for Safety consists of the Seventh edition.

The most recent designation of ANSI/UL 60079-0 as an American National Standard (ANSI) occurred on March 26, 2019. ANSI approval for a standard does not include the Cover Page, Transmittal Pages, Title Page, or Preface. The National Difference Page and IEC Foreword are also excluded from the ANSI approval of IEC-based standards.

Comments or proposals for revisions on any part of the Standard may be submitted to UL at any time. Proposals should be submitted via a Proposal Request in UL's On-Line Collaborative Standards Development System (CSDS) at https://csds.ul.com.

UL's Standards for Safety are copyrighted by UL. Neither a printed nor electronic copy of a Standard should be altered in any way. All of UL's Standards and all copyrights, ownerships, and rights regarding those Standards shall remain the sole and exclusive property of UL.

COPYRIGHT © 2019 UNDERWRITERS LABORATORIES INC.

This document is only permissible for use by Anonymous User of University of Toronto. 3/9/2020 12:39:45 PM

UL COPYRIGHTED MATERIAL –
NOT AUTHORIZED FOR FURTHER REPRODUCTION OR
DISTRIBUTION WITHOUT PERMISSION FROM UL

Documents
Document Sharing Hub

Full document details: UL 60079-0 2019

No Text on This Page

This document is only permissible for use by Anonymous User of University of Toronto. 3/9/2020 12:39:45 PM

UL COPYRIGHTED MATERIAL –
NOT AUTHORIZED FOR FURTHER REPRODUCTION OR
DISTRIBUTION WITHOUT PERMISSION FROM UL

Documents
Document Sharing Hub

Full document details: UL 60079-0 2019

CONTENTS

Preface (UL) **9**

National Differences **11**

FOREWORD **13**

1 Scope 21
1DV DE Modification of Clause 1 to replace with the following: 21
2 Normative references 23
2DV Modification of Clause 2 references to replace with the following: 23
3 Terms and definitions 25
3.24.1DV Modification of Clause 3.24.1 to replace with the following: 34
3.24.1.1DV Modification of Clause 3.24.1.1 to replace with the following: 35
3.24.1.2DV Modification of Clause 3.24.1.2 to replace with the following: 35
3.33DV Modification of Clause 3.33 to replace with the following: 37
3.36DV Modification of Clause 3.36 to replace with the following: 38
3.83DV Delete Clause 3.83. This definition does not apply. 45
3.84DV Delete Clause 3.84. This definition does not apply. 45
3.94ADV Addition of the following definition 47
4 Equipment grouping 47
4.1 General 47
4.2 Group I 47
4.2DV Modification of Clause 4.2 to replace with the following: 47
4.3 Group II 47
4.3DV.1 Modification of NOTE 1 of Clause 4.3 to replace with the following: 48
4.4 Group III 48
4.4DV Modification of Clause 4.4 to replace with the following: 48
4.5 Equipment for a particular explosive gas atmosphere 48
5 Temperatures 48
5.1 Environmental influences 48
5.2 Service temperature 49
5.3 Maximum surface temperature 50
6 Requirements for all equipment 53
6.1 General 53
6.1DV Modification of Clause 6.1 to replace with the following: 53
6.2 Mechanical strength of equipment 54
6.3 Opening times 54
6.4 Circulating currents in enclosures (e.g. of large electric machines) 54
6.5 Gasket retention 55
6.6 Electromagnetic and ultrasonic energy radiating equipment 55
7 Non-metallic enclosures and non-metallic parts of enclosures 57
7.1 General 57
7.2 Thermal endurance 59
7.3 Resistance to ultraviolet light 60
7.4 Electrostatic charges on external non-metallic materials 60
7.5 Attached external conductive parts 65
7.5DV.1 Modification of Clause 7.5, second paragraph to replace with the following: 65
8 Metallic enclosures and metallic parts of enclosures 66
8.1 Material composition 66
8.2 Group I 66
8.2DV Modification of Clause 8.2 to replace with the following: 66
8.3 Group II 66
8.3DV.1 Modification of Clause 8.3, second paragraph to replace with the following: 67

This document is only permissible for use by Anonymous User of University of Toronto. 3/9/2020 12:39:45 PM

UL COPYRIGHTED MATERIAL – NOT AUTHORIZED FOR FURTHER REPRODUCTION OR DISTRIBUTION WITHOUT PERMISSION FROM UL

Documents
Document Sharing Hub

Full document details: UL 60079-0 2019

8.4 Group III 67
8.4DV.1 Modification of Clause 8.4, second paragraph to replace with the following: 67
8.5 Copper Alloys 67
9 Fasteners 68
9.1 General 68
9.2 Special fasteners 68
9.2DV Modification of Clause 9.2 to replace with the following: 68
9.3 Holes for special fasteners 68
9.4 Hexagon socket set screws 71
10 Interlocking devices 71
11 Bushings 71
12 (Reserved for future use) 71
13 Ex Components 71
13.1 General 71
13.2 Mounting 71
13.3 Internal mounting 71
13.4 External mounting 72
13.5 Ex Component certificate 72
13.5DV Modification of Clause 13.5 to replace with the following: 72
14 Connection facilities 72
14.1 General 72
14.2 Type of protection 72
14.3 Creepage and clearance 72
15 Connection facilities for earthing or bonding conductors 73
15.1 Equipment requiring earthing or bonding 73
15.2 Equipment not requiring earthing 73
15.3 Size of protective earthing conductor connection 73
15.3DV Modification of Clause 15.3 to replace with the following: 73
15.4 Size of equipotential bonding conductor connection 74
15.4DV Modification of Clause 15.4 to replace with the following: 74
15.5 Protection against corrosion 74
15.6 Secureness of electrical connections 74
15.7 Internal earth continuity plate 74
15.7DV Delete Clause 15.7. It does not apply. 74
16 Entries into enclosures 75
16.1 General 75
16.1DV Modification of Clause 16.1 to replace with the following: 75
16.2 Identification of entries 75
16.3 Cable glands 75
16.3DV.1 Modification of Clause 16.3 to delete the NOTE. It does not apply. 76
16.4 Blanking elements 76
16.5 Thread adapters 76
16.6 Temperature at branching point and entry point 76
16.6DV Modification of Clause 16.6 to replace with the following: 76
16.7 Electrostatic charges of cable sheaths 77
17 Supplementary requirements for electric machines 79
17.1 General 79
17.2 Ventilation 79
17.3 Bearings 81
18 Supplementary requirements for switchgear 82
18.1 Flammable dielectric 82
18.2 Disconnectors 82
18.2DV.1 Modification of Clause 18.2, first paragraph to replace with the following: 82
18.3 Group I – Provisions for locking 82
18.4 Doors and covers 83
19 Reserved for future use 86

UL COPYRIGHTED MATERIAL – NOT AUTHORIZED FOR FURTHER REPRODUCTION OR DISTRIBUTION WITHOUT PERMISSION FROM UL
This document is only permissible for use by Anonymous User of University of Toronto. 3/9/2020 12:39:45 PM
AVA Documents Document Sharing Hub
Full document details: UL 60079-0 2019

20 Supplementary requirements for external plugs, socket outlets and connectors for field wiring connection 83
20.1 General 83
20.1DV Modification of Clause 20.1 to replace with the following: 83
20.2 Explosive gas atmospheres 84
20.2DV Modification of Clause 20.2 to replace with the following: 84
20.3 Explosive dust atmospheres 85
20.3DV Modification of Clause 20.3 to replace with the following: 85
20.4 Energized plugs 85
21 Supplementary requirements for luminaires 85
21.1 General 85
21.2 Covers for luminaires of EPL Mb, EPL Gb, or EPL Db 85
21.3 Covers for luminaires of EPL Gc or EPL Dc 86
21.4 Sodium lamps 86
22 Supplementary requirements for caplights and handlights 87
22.1 Group I caplights 87
22.2 Group II and Group III caplights and handlights 87
22.2DV Modification of Clause 22.2 to replace with the following: 87
23 Equipment incorporating cells and batteries 87
23.1 General 87
23.2 Interconnection of cells to form batteries 87
23.3 Cell types 87
23.4 Cells in a battery 90
23.5 Ratings of batteries 90
23.6 Interchangeability 90
23.7 Charging of primary batteries 90
23.8 Leakage 90
23.9 Connections 90
23.10 Orientation 91
23.11 Replacement of cells or batteries 91
23.12 Replaceable battery pack 91
24 Documentation 91
25 Compliance of prototype or sample with documents 91
26 Type tests 91
26.1 General 91
26.1DV.1 Modification of Clause 26.1, second paragraph to replace with the following: 92
26.2 Test configuration 92
26.3 Tests in explosive test mixtures 92
26.4 Tests of enclosures 92
26.5 Thermal tests 98
26.6 Torque test for bushings 101
26.7 Non-metallic enclosures or non-metallic parts of enclosures 102
26.8 Thermal endurance to heat 102
26.9 Thermal endurance to cold 103
26.10 Resistance to UV light 104
26.11 Resistance to chemical agents for Group I equipment 105
26.11DV.1 Modification of Clause 26.11, fourth paragraph to replace with the following: 105
26.12 Earth continuity 105
26.12DV Delete Clause 26.12. It does not apply 105
26.13 Surface resistance test of parts of enclosures of non-metallic materials 107
26.14 Measurement of capacitance 108
26.15 Verification of ratings of ventilating fans 108
26.16 Alternative qualification of elastomeric sealing O-rings 109
26.17 Transferred charge test 110
27 Routine tests 112
28 Manufacturer's responsibility 112

UL COPYRIGHTED MATERIAL – NOT AUTHORIZED FOR FURTHER REPRODUCTION OR DISTRIBUTION WITHOUT PERMISSION FROM UL

This document is only permissible for use by Anonymous User of University of Toronto. 3/9/2020 12:39:45 PM

AVA Documents Document Sharing Hub

Full document details: UL 60079-0 2019

28.1 Conformity with the documentation ... 112
28.2 Certificate ... 112
28.2DV Modification of Clause 28.2 to replace with the following: ... 112
28.3 Responsibility for marking ... 113
29 Marking ... 113
29.1 Applicability ... 113
29.2 Location ... 113
29.3 General ... 113
29.3DV Modification of Clause 29.3 to replace with the following: ... 113
29.4 Ex marking for explosive gas atmospheres ... 114
29.4DV Modification of Clause 29.4 to replace with the following: ... 114
29.5 Ex marking for explosive dust atmospheres ... 118
29.5DV Modification of Clause 29.5 to replace with the following: ... 118
29.6 Combined types (or levels) of protection ... 121
29.7 Multiple types of protection ... 121
29.8 Ga equipment using two independent Gb types (or levels) of protection ... 121
29.8DV Delete Clause 29.8. It does not apply. ... 121
29.9 Boundary wall ... 122
29.9DV Modification of Clause 29.9 to replace with the following: ... 122
29.10 Ex Components ... 122
29.10DV Modification of Clause 29.10 to replace with the following: ... 122
29.11 Small Ex Equipment and small Ex Components ... 123
29.11DV Modification of Clause 29.11 to replace with the following: ... 123
29.12 Extremely small Ex Equipment and extremely small Ex Components ... 123
29.13 Warning markings ... 123
29.14 Cells and batteries ... 124
29.15 Electric machines operated with a converter ... 124
29.16 Examples of marking[2] ... 125
29.16DV Modification of Clause 29.16 to replace with the following: ... 125
29.17DV Addition of Clause 29.17DV.1 as follows: ... 128
29.18DV Addition of Clause 29.18.1DV as follows: ... 128
29.19DV Addition of Clause 29.19.1DV as follows: ... 129
29.20DV Addition of Clause 29.20.1DV as follows: ... 130
29.21DV Addition of Clause 29.21.1DV as follows: ... 130
29.22DV Addition of Clause 29.22.1DV as follows: ... 130
29.23DV Addition of Clause 29.23.1DV: ... 131
29.24DV Addition of Clause 29.24.1DV as follows: ... 131
30 Instructions ... 131
30.1 General ... 131
30.1DV Modification of Clause 30.1 to replace with the following: ... 131
30.2 Cells and batteries ... 133
30.3 Electric machines ... 134
30.4 Ventilating fans ... 134
30.5 Cable glands ... 135

Annex A (normative) Supplementary requirements for cable glands <u>or cord connectors</u>

A.1 General ... 136
ADV.1 Modification of Annex A title and A.1 to replace with the following: ... 136
A.2 Constructional requirements ... 137
A.2.1 Cable sealing ... 137
A.2.2 Filling compounds ... 138
A.2.3 Clamping ... 138
A.2.4 Lead-in of cable ... 138
A.2.5 Release by a tool ... 139
A.2.6 Fixing ... 139

UL COPYRIGHTED MATERIAL – NOT AUTHORIZED FOR FURTHER REPRODUCTION OR DISTRIBUTION WITHOUT PERMISSION FROM UL
This document is only permissible for use by Anonymous User of University of Toronto. 3/9/2020 12:39:45 PM
Documents Document Sharing Hub
Full document details: UL 60079-0 2019

A.2.7 Degree of protection 139
A.3 Type tests 139
A.3.1 Tests of clamping of non-armoured and braided cables 139
A.3.2 Tests of clamping of armoured cables 142
A.3.3 Type test for resistance to impact 143
A.3.4 Test for degree of protection (IP) of cable glands 144
A.3.4DV.1 Modification of A.3.4, first paragraph to replace with the following: 144
A.4 Marking 145
A.4.1 Marking of cable glands 145
A.4.1DV.1 Modification of A.4.1 to replace with the following: 145
A.4.2 Identification of cable-sealing rings 145
A.5 Instructions 146

Annex B (normative) Requirements for Ex Components

Annex C (informative) Example of rig for resistance to impact test

Annex D (informative) Electric machines connected to converters

Annex E (informative) Temperature evaluation of electric machines

Annex F (informative) Guidance flowchart for tests of non-metallic enclosures or non-metallic parts of enclosures (26.4)

Annex G (informative) Guidance flowchart for tests of cable glands

Annex H (informative) Shaft voltages resulting in motor bearing or shaft brush sparking Discharge energy calculation

H.1 General 158
H.2 Assessment of the risk of ignition using ignition energy calculation 158
H.3 Shaft voltage determination for a rotating machine 159
H.4 Capacitance "*C*" calculation for a rotating machine 160
Figure H.2DV Modification of Figure H.2 by replacing with the following: 162
H.5 Energy "E" calculation for a rotating machine 163
H.6 Assessment using reference curves 163

Annex DVA (informative) Common standards – Safety requirements for electrical equipment

Annex DVA Addition of Annex DVA as follows: 165

Annex DVB (informative) Equipment grounding

Annex DVB Addition of Annex DVB as follows: 169

Bibliography

UL COPYRIGHTED MATERIAL –
NOT AUTHORIZED FOR FURTHER REPRODUCTION OR
DISTRIBUTION WITHOUT PERMISSION FROM UL

This document is only permissible for use by Anonymous User of University of Toronto. 3/9/2020 12:39:45 PM

Documents
Document Sharing Hub

Full document details: UL 60079-0 2019

No Text on This Page

This document is only permissible for use by Anonymous User of University of Toronto. 3/9/2020 12:39:45 PM

UL COPYRIGHTED MATERIAL –
NOT AUTHORIZED FOR FURTHER REPRODUCTION OR
DISTRIBUTION WITHOUT PERMISSION FROM UL

Documents
Document Sharing Hub

Full document details: UL 60079-0 2019

Preface (UL)

This UL Standard is based on IEC Publication 60079-0: Seventh edition, Explosive Atmospheres – Part 0: Equipment – General Requirements. IEC publication 60079-0 is copyrighted by the IEC.

This is the UL Standard for Safety for Explosive Atmospheres – Part 0: Equipment – General Requirements.

These materials are subject to copyright claims of IEC and UL. No part of this publication may be reproduced in any form, including an electronic retrieval system, without the prior written permission of UL. All requests pertaining to the Explosive Atmospheres – Part 0: Equipment – General Requirements, UL 60079-0 Standard should be submitted to UL.

Note – Although the intended primary application of this Standard is stated in its Scope, it is important to note that it remains the responsibility of the users of the Standard to judge its suitability for their particular purpose.

The following people served as members of STP 60079 and participated in the review of this standard:

NAME	COMPANY
*B. Zimmermann, Chair	R Stahl Inc.
*T. Adam	FM Approvals LLC
R. Allen	Honeywell Inc.
*J. Anderson	Thermon Inc.
D. Ankele	UL LLC
S. Bihler-Lopez	CML Inc.
S. Blais	Emerson/Appleton Group
K. Boegli	KBB Consulting
R. Brownlee	Pepperl + Fuchs Inc.
D. Burns	Shell P&T — Innovation / R&D
R. Chalmers	Industrial Scientific Corp.
*C. Coache	National Fire Protection Association
*M. Cole	Hubbell Canada LP
D. Cook	Shelby County Department of Development Services
M. Coppler	Det Norske Veritas Certification Inc.
*R. Deadman	UL LLC
M. Dona	Consultant
T. Dubaniewicz	NIOSH
G. Edwards	Rosemount Inc.
M. Egloff	R Stahl Inc
M. Ehrmann	Montana Tech, University of Montana
D. El Tawy	Siemens Energy
*A. Engler	Det Norske Veritas DNV
Z. Fosse	DEKRA Certification Inc
G. Gurinder	Gurinder Garcha Consulting
D. Grady	Talema Group
R. Holub	DuPont
R. Hong	Solar Turbines Inc.
P. House	Thermon Mfg. Co.
D. Jang	National Research Council Canada

This document is only permissible for use by Anonymous User of University of Toronto. 3/9/2020 12:39:45 PM

UL COPYRIGHTED MATERIAL – NOT AUTHORIZED FOR FURTHER REPRODUCTION OR DISTRIBUTION WITHOUT PERMISSION FROM UL

Documents
Document Sharing Hub

Full document details: UL 60079-0 2019

NAME	COMPANY
*B. Johnson	Thermon Mfg. Co.
R. Johnson	Source IEC
*P. Kelly	UL LLC
S. Kiddle	ABB Inc
A. Kreider	Phoenix Contact Development & Manufacturing Inc.
S. Lambaz	Littelfuse Inc.
W. Lawrence	FM Approvals LLC
E. Leubner	Eaton's Crouse-Hinds Business
W. Lowers	WCL Corp.
*N. Ludlam	FM Approvals Ltd.
R. Martin	USCG
E. Massey	ABB Motors and Mechanical Inc.
E. Massey	Baldor Electric Co.
W. McBride	Northern Electric Co.
T. Michalski	Killark Electric Mfg. Co.
J. Miller	Detector Electronics Corp.
*O. Murphy	Honeywell Inc.
D. Nedorostek	Bureau of Safety & Environmental Enforcement (BSEE)
A. Page	Bud Page Consultant Inc.
R. Parks	National Instruments
L. Ricks	ExVeritas North America LLC
P. Rigling	Eaton Electric Ltd - MTL
*K. Robinson	Occupational Safety and Health Adm.
J. Ruggieri	General Machine Corp.
*J. Scheller	ABB Motor and Mechanical Inc.
P. Schimmoeller	CSA Group
*T. Schnaare	Rosemount Inc.
*A. Schnuelle	CML Inc.
R. Seitz	ARTECH Engineering
S. Sharma	Lindsay Corp.
G. Sitnik	MET Laboratories Inc.
G. Steinman	ABB Installation Products Ltd.
*R. Teather	Det Norske Veritas Certification Inc.
L. Vlagea	General Monitors
D. Wechsler	American Chemistry Council
R. Wigg	E-x Solutions International Pty Ltd.
*K. Wolf	Intertek
T. Woods	Baker Hughes, A GE Co.
R. Zalosh	Firexplo

* Non-voting member

This document is only permissible for use by Anonymous User of University of Toronto. 3/9/2020 12:39:45 PM

UL COPYRIGHTED MATERIAL –
NOT AUTHORIZED FOR FURTHER REPRODUCTION OR
DISTRIBUTION WITHOUT PERMISSION FROM UL

Documents
Document Sharing Hub

Full document details: UL 60079-0 2019

National Differences

National Differences from the text of International Electrotechnical Commission (IEC) Publication 60079-0, Explosive atmospheres – Part 0: Equipment – General requirements, copyright 2017, are indicated by notations (differences) and are presented in bold text.

There are five types of National Differences as noted below. The difference type is noted on the first line of the National Difference in the standard. The standard may not include all types of these National Differences.

D1 – These are National Differences which are based on ***basic safety principles and requirements***, elimination of which would compromise safety for consumers and users of products.

D2 – These are National Differences from IEC requirements based on existing ***safety practices***. These requirements reflect national safety practices, where empirical substantiation (for the IEC or national requirement) is not available or the text has not been included in the IEC standard.

DC – These are National Differences based on the ***component standards*** and will not be deleted until a particular component standard is harmonized with the IEC component standard.

DE – These are National Differences based on ***editorial comments or corrections***.

DR – These are National Differences based on the ***national regulatory requirements***.

Each national difference contains a description of what the national difference entails. Typically one of the following words is used to explain how the text of the national difference is to be applied to the base IEC text:

Addition / Add - An addition entails adding a complete new numbered clause, subclause, table, figure, or annex. Addition is not meant to include adding select words to the base IEC text.

Deletion / Delete - A deletion entails complete deletion of an entire numbered clause, subclause, table, figure, or annex without any replacement text.

Modification / Modify - A modification is an altering of the existing base IEC text such as the addition, replacement or deletion of certain words or the replacement of an entire clause, subclause, table, figure, or annex of the base IEC text.

This document is only permissible for use by Anonymous User of University of Toronto. 3/9/2020 12:39:45 PM

UL COPYRIGHTED MATERIAL –
NOT AUTHORIZED FOR FURTHER REPRODUCTION OR
DISTRIBUTION WITHOUT PERMISSION FROM UL

Documents
Document Sharing Hub

Full document details: UL 60079-0 2019

No Text on This Page

This document is only permissible for use by Anonymous User of University of Toronto. 3/9/2020 12:39:45 PM

UL COPYRIGHTED MATERIAL –
NOT AUTHORIZED FOR FURTHER REPRODUCTION OR
DISTRIBUTION WITHOUT PERMISSION FROM UL

Documents
Document Sharing Hub

Full document details: UL 60079-0 2019

FOREWORD

INTERNATIONAL ELECTROTECHNICAL COMMISSION

EXPLOSIVE ATMOSPHERES – Part 0: Equipment – General requirements

1) The International Electrotechnical Commission (IEC) is a worldwide organization for standardization comprising all national electrotechnical committees (IEC National Committees). The object of IEC is to promote international co-operation on all questions concerning standardization in the electrical and electronic fields. To this end and in addition to other activities, IEC publishes International Standards, Technical Specifications, Technical Reports, Publicly Available Specifications (PAS) and Guides (hereafter referred to as "IEC Publication(s)"). Their preparation is entrusted to technical committees; any IEC National Committee interested in the subject dealt with may participate in this preparatory work. International, governmental and non-governmental organizations liaising with the IEC also participate in this preparation. IEC collaborates closely with the International Organization for Standardization (ISO) in accordance with conditions determined by agreement between the two organizations.

2) The formal decisions or agreements of IEC on technical matters express, as nearly as possible, an international consensus of opinion on the relevant subjects since each technical committee has representation from all interested IEC National Committees.

3) IEC Publications have the form of recommendations for international use and are accepted by IEC National Committees in that sense. While all reasonable efforts are made to ensure that the technical content of IEC Publications is accurate, IEC cannot be held responsible for the way in which they are used or for any misinterpretation by any end user.

4) In order to promote international uniformity, IEC National Committees undertake to apply IEC Publications transparently to the maximum extent possible in their national and regional publications. Any divergence between any IEC Publication and the corresponding national or regional publication shall be clearly indicated in the latter.

5) IEC itself does not provide any attestation of conformity. Independent certification bodies provide conformity assessment services and, in some areas, access to IEC marks of conformity. IEC is not responsible for any services carried out by independent certification bodies.

6) All users should ensure that they have the latest edition of this publication.

7) No liability shall attach to IEC or its directors, employees, servants or agents including individual experts and members of its technical committees and IEC National Committees for any personal injury, property damage or other damage of any nature whatsoever, whether direct or indirect, or for costs (including legal fees) and expenses arising out of the publication, use of, or reliance upon, this IEC Publication or any other IEC Publications.

8) Attention is drawn to the Normative references cited in this publication. Use of the referenced publications is indispensable for the correct application of this publication.

9) Attention is drawn to the possibility that some of the elements of this IEC Publication may be the subject of patent rights. IEC shall not be held responsible for identifying any or all such patent rights.

International Standard IEC 60079-0 has been prepared by IEC technical committee 31: Equipment for explosive atmospheres.

This seventh edition cancels and replaces the sixth edition, published in 2011. This edition constitutes a technical revision.

The significance of the changes between IEC Standard, IEC 60079-0, Edition 6 (2011) and IEC 60079-0, Edition 7 (2017) are as listed below:

This document is only permissible for use by Anonymous User of University of Toronto. 3/9/2020 12:39:45 PM

UL COPYRIGHTED MATERIAL –
NOT AUTHORIZED FOR FURTHER REPRODUCTION OR
DISTRIBUTION WITHOUT PERMISSION FROM UL

Documents
Document Sharing Hub

Full document details: UL 60079-0 2019

		Type		
Explanation of the significance of the changes	**Clause**	**Minor and editorial changes**	**Extension**	**Major technical changes**
Throughout document, “electrical equipment” replaced by “equipment” where appropriate.	Multiple	X		
Scope List of “Type of “Protection” and “Product” standards combined into one list.	1	X		
Definitions used in multiple sub-parts added. Definitions harmonized across sub-parts and added to 60079-0 where appropriate. Battery definitions updated	3	X		
Clarification of the way that information on process temperature influences can be expressed.	5.1.2	X		
Clarification regarding the determination of service temperatures when dust layers are present	5.2	X		
Clarification on the need to provide service temperature information for Ex Components in the Schedule of Limitations	5.2	X		
Relocation of EPL Da dust layer requirements from IEC 60079-18 & IEC 60079-31	5.3.2.3.1	A1		
Clarified that for EPL Db, a maximum specified dust layer of greater than 200 mm is not permitted as thicker layers have no additional effect on maximum surface temperature.	b)	X		
Added for EPL Db, a dust layer in a specified orientation, marked as T_L	c)		X	
Clarified that for EPL Dc, no dust layer tests are required.	5.3.2.3.3	X		
Clarified that the “temperature” is the temperature of the air surrounding the component	5.3.3	X		
Subdivided section dealing with higher permitted surface temperatures for “smooth” surfaces. Corrected area from 1 000 mm^2 to 10 000 mm^2.	5.3.4	X		
Clarified that the “Ex” requirements of IEC 60079 supplement those of the relevant industrial standards.	6.1	X		
Added requirement that where an adhesive is used to secure a gasket, it shall be used within its COT and shall comply with the requirements for cements.	6.5			C1
Requirements relocated to IEC 60079-28	former 6.6.2	A2		
Ultrasonic requirements updated based on latest research work	6.6.3		X	
Added reference to IEC 60079-28	6.6.4	A2		
Material identification parameters have been revised to reflect reasonably obtainable information	7.1.2.2	X		
“RTI-mechanical” has been clarified to include “RTI-mechanical strength” and “RTI-mechanical impact”	7.1.2.2	X		
Material identification parameters have been revised to reflect reasonably obtainable information	7.1.2.3	X		
Relocated information on “cements” from Clause 12.	7.1.2.4	X		
“RTI-mechanical” has been clarified to include “RTI-mechanical strength” and “RTI-mechanical impact”. Requirements for cements aligned with the requirements for elastomers.	7.2.2	X		
Relocation of 10 K margin for EPL Gc or Dc from IEC 60079-15, IEC 60079-18 & IEC 60079-31	7.2.2	A3		
Added clarification with respect to gaskets and seals where only the outer edge is potentially exposed to light.	7.3	X		

UL COPYRIGHTED MATERIAL – NOT AUTHORIZED FOR FURTHER REPRODUCTION OR DISTRIBUTION WITHOUT PERMISSION FROM UL

This document is only permissible for use by Anonymous User of University of Toronto. 3/9/2020 12:39:45 PM

Documents
Document Sharing Hub

		Type		
Explanation of the significance of the changes	**Clause**	**Minor and editorial changes**	**Extension**	**Major technical changes**
Clarification added that one or more of the described techniques may be used	7.4.2	X		
Added additional relaxation for the case where a surface is in contact with an earthed surface on only two of four sides.	7.4.2 b)		X	
Added reference to IEC 60243-1 and IEC 60243-2 for test method to require a 4 kV DC test.	7.4.2 c)			C2
Additional guidance added with respect to the possible Specific Conditions of Use	7.4.2 e)	X		
New option added for portable, mains-powered equipment with earth-connected guard	7.4.2 f)		X	
Added option for determination of maximum transferred charge.	7.4.2 g) Table 10		X	
Added missing limits (same as 7.4.2)	7.4.3 a)	X		
Clarified that it is a dc test that is conducted	7.4.3 b)	X		
Clarified that this requirement is not applied to personal or portable equipment	7.5	X		
Clarified Group I limits	8.2	X		
Clarified Group II, EPL Ga limits	8.3	X		
Added limitation for external surfaces of >65% copper	8.5			C3
Added clarification as to what is considered a tool	9.1	X		
Clarified that the tolerance class of the set screw is not critical, only that it not protrude from the threaded hole after tightening.	9.4	X		
Information on cements transferred to Clause 7	12	X		
Required that Ex Component Certificates require a Schedule of Limitations in all cases	13.5		X	
Revised to clarified that all connection facilities may not be a “Compartment”.	14	X		
Sub-clause split to separate the requirements for protective earthing and equipotential bonding into separate sections	15.3 15.4	X		
Section split to separate secureness of electrical connections from the internal earth continuity plate.	15.6 15.7	X		
Non-threaded Group I cable glands are no longer required to be Ex Components.	16.3		X	
Non-threaded Group I blanking elements are no longer required to be Ex Components.	16.4		X	
Scope of Clause 17 clarified to define applicability	17	X		
Additional guidance notes added to address bearings	17.3	X		
Clarified applicability to disconnectors, interlocks, and maintenance switches.	18.2	X		
Fuse requirements deleted as they are addressed in the individual sub-parts	19	X		
Added requirements for EPL Gc and Dc	20.1			C4
The test circuit requirements for a flameproof connection have been removed as they are more completely specified in IEC 60079-1.	20.2	X		
The impact test requirements for luminaires are relocated to Table 15	21.1 Table 15	X		
Clarified interlock switch operation for flameproof luminaires	21.2	X		
Clarified that some Types of Protection permit connection of cells in parallel	23.2	X		

UL COPYRIGHTED MATERIAL – NOT AUTHORIZED FOR FURTHER REPRODUCTION OR DISTRIBUTION WITHOUT PERMISSION FROM UL

This document is only permissible for use by Anonymous User of University of Toronto. 3/9/2020 12:39:45 PM

Documents
Document Sharing Hub

		Type		
Explanation of the significance of the changes	**Clause**	**Minor and editorial changes**	**Extension**	**Major technical changes**
New cell types and data added based on latest available data	Table 13		X	
New cell types and data added based on latest available data	Table 14			C5
Clarification of what documentation is to be prepared regarding the explosion safety aspects of the equipment	24	X		
Clarification that the type tests are to take into consideration the installation instructions	26.2	X		
Clarification that the “glass” requirements also apply to “ceramic” parts	26.4.1.1	X		
Added a permission to interchange the order of tests at the “lower test temperature” and the “upper test temperature”.	26.4.1.2.2 26.4.1.2.3	X		
Clarified the construction of the impact test fixture	26.4.2	X		
Clarified the impact tests for glass parts	26.4.2	X		
Added clarification to deal with the new IPX9 ratings	26.4.5.1		X	
Clarified the test voltage for maximum surface temperature	26.5.1.3	X		
Relocation of EPL Da dust layer requirements from IEC 60079-18 & IEC 60079-31	26.5.1.3	A1		
Relocation of EPL Db specified dust layer requirements from IEC 60079-31	26.5.1.3	A4		
Added for EPL Db, a dust layer in a specified orientation, marked as T_L	26.5.1.3		B1	
Clarified that for EPL Dc, the testing is conducted without a dust layer.	26.5.1.3	X		
Relocation of thermal endurance to heat 10K relaxation for Gc equipment from IEC 60079-15, IEC 60079-18, & IEC 60079-31	Table 17	X		
Clarification of a consistent way to address elastomeric materials exposed to ultraviolet light	26.10	X		
Replacement of “oil No. 2” with the revised designation of “oil IRM 902”.	26.11	X		
Option added for testing at lower voltages when low resistance materials are encountered	26.13		X	
Transferred charge test added based on IEC TS 60079-32-2	26.17		X	
The reference to a specific instruction document instead of an “X” condition relocated to e) instead of a note giving a permission	29.3 e)	X		
Updated to reflect the additional levels of protection already shown in the sub-parts: “da”, “dc”, “eb”, “ec”, “oc”, “op is”, “op pr”, “op sh”, “pxb”, “pyb”, “pzc”, “qb”, “sa”, “sb”, and “sc”.	29.4 b)	X		
Text added to address marking of “Ex associated equipment”	29.4		X	
Updated to reflect the additional levels of protection already shown in the sub-parts: “ic”, “op is”, “op pr”, “op sh”, “pxb”, “pyb”, “pzc”, “sa”, “sb”, and “sc”.	29.5 b)	X		
Clarified marking of EPL Da, EPL Db with no dust layer, EPL Db with a specified dust layer, and EPL Dc.	29.5 d)	X		
Introduced marking for EPL Db with a dust layer in a specified orientation	29.5 d)		X	
Text added to address marking of “Ex associated equipment”	29.5		X	
Text added to address marking of equipment intended to be installed in a boundary wall.	29.9		X	
The marking of Ex Component enclosure was aligned with the marking requirements of IEC 60079-1 and IEC 60079-7	29.10	X		

This document is only permissible for use by Anonymous User of University of Toronto. 3/9/2020 12:39:45 PM

UL COPYRIGHTED MATERIAL – NOT AUTHORIZED FOR FURTHER REPRODUCTION OR DISTRIBUTION WITHOUT PERMISSION FROM UL

Documents
Document Sharing Hub

Full document details: UL 60079-0 2019

		Type		
Explanation of the significance of the changes	**Clause**	**Minor and editorial changes**	**Extension**	**Major technical changes**
The alternate marking of EPL has been deleted.	former 29.13			C6
Marking for electric machines operated with a converter clarified	29.15	X		
Instruction material guidance clarified	30.1	X		
Additional instruction material for electric machines added	30.3			C7
Additional instruction material for cable glands added	30.5 A.5			C8
Allow ISO 10807 hose assemblies to be used with cable glands.	A.1		X	
Clarify testing with stainless steel mandrels	A.3	X		
Reduction of the time / slippage permitted	A.3.1.1		X	
Clarify impact testing of cable glands	A.3.3 Figure A.3	X		
Clarified the order of tests	A.3.4	X		
Clarified remarks	Annex B	X		
Aligned Figure with text	Figure C.1	X		
Clarified operation of electric machines from converters	Annex D (informa-tive)	X		
Clarified temperature testing of electric machines	Annex E (informa-tive)	X		
Flowchart for Cable Gland testing	Annex G (informa-tive)	X		
Guidance of electric machine shaft voltages	Annex H (informa-tive)	X		

NOTE The technical changes referred to include the significance of technical changes in the revised IEC Standard, but they do not form an exhaustive list of all modifications from the previous version. More guidance may be found by referring to the Redline Version of the standard.

Explanations:

A) Definitions

Minor and editorial changes clarification
decrease of technical requirements
minor technical change
editorial corrections

These are changes which modify requirements in an editorial or a minor technical way. They include changes of the wording to clarify technical requirements without any technical change, or a reduction in level of existing requirement.

Extension addition of technical options

UL COPYRIGHTED MATERIAL – NOT AUTHORIZED FOR FURTHER REPRODUCTION OR DISTRIBUTION WITHOUT PERMISSION FROM UL

This document is only permissible for use by Anonymous User of University of Toronto. 3/9/2020 12:39:45 PM

AVA Documents Document Sharing Hub

Full document details: UL 60079-0 2019

These are changes which add new or modify existing technical requirements, in a way that new options are given, but without increasing requirements for equipment that was fully compliant with the previous standard. Therefore, these will not have to be considered for products in conformity with the preceding edition.

Major technical changes addition of technical requirements
increase of technical requirements

These are changes to technical requirements (addition, increase of the level or removal) made in a way that a product in conformity with the preceding edition will not always be able to fulfil the requirements given in the later edition. These changes have to be considered for products in conformity with the preceding edition. For these changes additional information is provided in clause B) below.

NOTE These changes represent current technological knowledge. However, these changes should not normally have an influence on equipment already placed on the market.

B) Information about the background of changes

A1 The dust layer requirements for EPL Da are unchanged from what previously existed in IEC 60079-18, Ed 4 and IEC 60079-31, Ed 2, but have been relocated to IEC 60079-0 to allow consistent application in all Types of Protection.

A2 IEC 60079-28 now includes all requirements for optical radiation for all EPLs.

A3 The COT requirements for EPL Gc or Dc are unchanged from what previously existed in IEC 60079-15, Ed 4, IEC 60079-18, Ed 4, and IEC 60079-31, Ed 2, but have been relocated to IEC 60079-0 to allow consistent application in all Types of Protection.

A4 The dust layer requirements for EPL Db with a specified dust layer depth are unchanged from what previously existed in IEC 60079-31, Ed 2, but have been relocated to IEC 60079-0 to allow consistent application in all Types of Protection.

B1 Dust layer requirements for EPL Db with a dust layer in a specified orientation have been added.

C1 It is recognized that the new requirements were, in many cases, already applied. The change is to ensure that they are uniformly and consistently applied.

C2 Require that the test be conducted at 4 kV DC.

C3 The limitation applies to external surfaces of other than cable glands, blanking elements, thread adapters and bushings.

C4 The added requirements for tool securing and marking are consistent with the approach in IEC 60079-15

C5 Voltage values were changed following additional research due to the complicated assessment and sometimes unspecified construction of Li/Ion-cells. It was found that some voltage values previously stated were too low.

C6 The now required EPL marking may be other than that permitted by the Level of Protection to account for limiting restrictions of material or plastic material surface area.

This document is only permissible for use by Anonymous User of University of Toronto. 3/9/2020 12:39:45 PM

UL COPYRIGHTED MATERIAL
NOT AUTHORIZED FOR FURTHER REPRODUCTION OR
DISTRIBUTION WITHOUT PERMISSION FROM UL

Documents
Document Sharing Hub

Full document details: UL 60079-0 2019

C7 Additional instruction material for electric machines required to facilitate selection, installation, and maintenance.

C8 Additional instruction material for cable glands required to facilitate selection and installation.

The text of this International Standard is based on the following documents:

FDIS	Report on voting
31/1345/FDIS	31/1356/RVD

Full information on the voting for the approval of this International Standard can be found in the report on voting indicated in the above table.

This document has been drafted in accordance with the ISO/IEC Directives, Part 2.

A list of all parts of the IEC 60079 series, under the general title *Explosive atmospheres*, can be found on the IEC website.

The committee has decided that the contents of this document will remain unchanged until the stability date indicated on the IEC website under "http://webstore. iec. ch" in the data related to the specific document. At this date, the document will be

• reconfirmed,

• withdrawn,

• replaced by a revised edition, or

• amended.

This document is only permissible for use by Anonymous User of University of Toronto. 3/9/2020 12:39:45 PM

UL COPYRIGHTED MATERIAL –
NOT AUTHORIZED FOR FURTHER REPRODUCTION OR
DISTRIBUTION WITHOUT PERMISSION FROM UL

Documents
Document Sharing Hub

Full document details: UL 60079-0 2019

No Text on This Page

This document is only permissible for use by Anonymous User of University of Toronto. 3/9/2020 12:39:45 PM

UL COPYRIGHTED MATERIAL –
NOT AUTHORIZED FOR FURTHER REPRODUCTION OR
DISTRIBUTION WITHOUT PERMISSION FROM UL

Documents
Document Sharing Hub

Full document details: UL 60079-0 2019

EXPLOSIVE ATMOSPHERES – Part 0: Equipment – General requirements

1 Scope

1DV DR *DE Modification of Clause 1 to replace with the following:*

This ~~part of IEC 60079~~ document specifies the general requirements for construction, testing and marking of Ex Equipment and Ex Components intended for use in explosive atmospheres. Explosive atmospheres are identified by the National Electrical Code®, ANSI/NFPA 70 as hazardous (classified) locations and include the following specified locations:

- Class I, Zone 0
- Class I, Zone 1
- Class I, Zone 2
- Zone 20
- Zone 21
- Zone 22

See 6.1 for the relationship of the Equipment Protection Level (EPL) to the Zone area classification.

The standard atmospheric conditions (relating to the explosion characteristics of the atmosphere) under which it may be assumed that Ex Equipment can be operated are:

• temperature –20 °C to +60 °C;

• pressure 80 kPa (0,8 bar) to 110 kPa (1,1 bar); and

• air with normal oxygen content, typically 21 % v/v.

This ~~part of IEC 60079~~ document and other standards supplementing this standard specify additional test requirements for Ex Equipment operating outside the standard temperature range, but further additional consideration and additional testing may be required for Ex Equipment operating outside the standard atmospheric pressure range and standard oxygen content. Such additional testing may be particularly relevant with respect to Types of Protection that depend on quenching of a flame such as 'flameproof enclosures "d"' ~~(IEC 60079-1)~~ or limitation of energy, 'intrinsic safety "i"' ~~(IEC 60079-11)~~.

NOTE 1 Although the standard atmospheric conditions above give a temperature range for the atmosphere of -20 °C to +60 °C, the normal ambient temperature range for the Ex Equipment is –20 °C to +40 °C, unless otherwise specified and marked. See 5.1.1. It is considered that – 20 °C to +40 °C is appropriate for many items of Ex Equipment and that to manufacture all Ex Equipment to be suitable for a standard atmosphere upper ambient temperature of +60 °C would place unnecessary design constraints.

NOTE 2 Requirements given in this standard result from an ignition hazard assessment made on equipment. The ignition sources taken into account are those found associated with this type of equipment, such as hot surfaces, electromagnetic radiation, mechanically generated sparks, mechanical impacts resulting in thermite reactions, electrical arcing and static electric discharge in normal industrial environments.

UL COPYRIGHTED MATERIAL – NOT AUTHORIZED FOR DISTRIBUTION OR DISPLAY ON A NETWORK OR PRINTED COPY FROM UL

This document is only permissible for use by Anonymous User of University of Toronto. 3/9/2020 12:39:45 PM

Documents
Document Sharing Hub

NOTE 3 Where an explosive gas atmosphere and a combustible dust atmosphere are, or can be, present at the same time, the simultaneous presence of both often warrants additional protective measures. ~~Additional guidance on the use of Ex Equipment in hybrid mixtures (mixture of a flammable gas or vapour with a combustible dust or combustible flyings) is given in IEC 60079-14.~~

DE ~~IEC 60079~~ This standard does not specify requirements for safety, other than those directly related to the explosion risk.

Ignition sources like adiabatic compression, shock waves, exothermic chemical reaction, self-ignition of dust, naked flames and hot gases/liquids, are not addressed by this standard.

NOTE 4 Although outside the scope of this standard, such equipment would typically be subjected to a hazard analysis that identifies and lists all of the potential sources of ignition by the equipment and the measures to be applied to prevent them becoming effective. See ISO/IEC 80079-36.

This document is supplemented or modified by the following parts and technical specifications:

– IEC 60079-1: Gas – Flameproof enclosures "d";

– IEC 60079-2: Gas and dust – Pressurized enclosure "p";

– IEC 60079-5: Gas – Powder filling "q";

– IEC 60079-6: Gas – Liquid immersion "o";

– IEC 60079-7: Gas – Increased safety "e";

– IEC 60079-11: Gas and dust – Intrinsic safety "i";

~~**– IEC 60079-13: Gas and dust – Equipment protection by pressurized room "p" & artificially ventilated room "v";**~~

– IEC 60079-15: Gas – Type of protection "n";

– IEC 60079-18: Gas and dust – Encapsulation "m";

– IEC 60079-25: Gas and dust – Intrinsically safe electrical systems

– IEC 60079-26: Gas – Equipment with equipment protection level (EPL) Ga

– IEC 60079-28: Gas and dust – Protection of equipment and transmission systems using optical radiation

~~**– IEC 60079-29-1: Gas detectors – Performance requirements of detectors for flammable gases**~~

– IEC 60079-29-4: Gas detectors – Performance requirements of open path detectors for flammable gases

– IEC/IEEE 60079-30-1: Gas and dust – Electrical resistance trace heating – General and testing requirements.

UL COPYRIGHTED MATERIAL – NOT AUTHORIZED FOR FURTHER REPRODUCTION OR DISTRIBUTION WITHOUT PERMISSION FROM UL

This document is only permissible for use by Anonymous User of University of Toronto. 3/9/2020 12:39:45 PM

Documents
Document Sharing Hub

Full document details: UL 60079-0 2019

– IEC 60079-31: Dust – Protection by enclosure "t"

~~**– IEC 60079-33: Gas and dust – Special protection "s"**~~

~~**– IEC 60079-35-1: Caplights for use in mines susceptible to firedamp – General requirements – Construction and testing in relation to the risk of explosion**~~

~~**– IEC TS 60079-39: Gas – Intrinsically safe systems with electronically controlled spark duration limitation**~~

~~**– IEC TS 60079-40: Gas – Requirements for process sealing between flammable process fluids and electrical systems**~~

~~**– ISO 80079-36: Gas and dust – Non-electrical equipment for explosive atmospheres – Basic method and requirements**~~

Where references are made to IEC 60079 standards, the referenced requirements found in these standards shall apply as modified by any applicable U.S. National Differences.

2 Normative references

The following documents are referred to in the text in such a way that some or all of their content constitutes requirements of this document. For dated references, only the edition cited applies. For undated references, the latest edition of the referenced document (including any amendments) applies.

2DV DR ***Modification of Clause 2 references to replace with the following:***

ANSI/NFPA 70, ***National Electrical Code***

ASTM D5964, ***Standard practice for rubber IRM 901, IRM 902, and IRM 903 replacement oils for ASTM No. 1, ASTM No. 2, and ASTM No. 3***

~~**IEC 60034-1,*Rotating electrical machines – Part 1: Rating and performance***~~

IEC 60034-5, ***Rotating electrical machines – Part 5: Degrees of protection provided by the integral design of rotating electrical machines (IP code) – Classification***

~~**IEC 60079-1, Explosive atmospheres – Part 1: Equipment protection by flameproof enclosures "d"**~~

IEC 60079-20-1, ***Explosive atmospheres – Part 20-1: Material characteristics for gas and vapour classification – Test methods and data***

~~**IEC 60079-26,** ***Explosive atmospheres – Part 26: Equipment with Equipment Protection Level (EPL) Ga***~~

~~**IEC 60079-35-1,** ***Explosive atmospheres – Part 35-1: Caplights for use in mines susceptible to firedamp – General requirements – Construction and testing in relation to the risk of explosion***~~

UL COPYRIGHTED MATERIAL –
NOT AUTHORIZED FOR FURTHER REPRODUCTION OR
DISTRIBUTION WITHOUT PERMISSION FROM UL

IEC 60086-1, ***Primary batteries – Part 1: General***

This document is only permissible for use by Anonymous User of University of Toronto. 3/9/2020 12:39:45 PM

Documents
Document Sharing Hub

Full document details: UL 60079-0 2019

IEC 60192, ***Low-pressure sodium vapour lamps – Performance specifications***

IEC 60216-1, ***Electrical insulating materials – Thermal endurance properties – Part 1: Ageing procedures and evaluation of test results***

IEC 60216-2, ***Electrical insulating materials – Thermal endurance properties – Part 2: Determination of thermal endurance properties of electrical insulating materials – Choice of test criteria***

IEC 60243-1, ***Electric strength of insulating materials – Test methods – Part 1: Tests at power frequencies***

IEC 60423, ***Conduit systems for cable management – Outside diameters of conduits for electrical installations and threads for conduits and fittings***

IEC 60529, ***Degrees of protection provided by enclosures (IP Code)***

IEC 60662, ***High-pressure sodium vapour lamps – Performance specifications***

IEC 60664-1, ***Insulation coordination for equipment within low-voltage systems – Part 1: Principles, requirements and tests***

~~**IEC 60947-1**, ***Low-voltage switchgear and controlgear – Part 1: General rules***~~

IEC 62626-1, ***Low-voltage switchgear and controlgear enclosed equipment – Part 1: Enclosed switch-disconnectors outside the scope of IEC 60947-3 to provide isolation during repair and maintenance work***

ISO 48, ***Rubber, vulcanized or thermoplastic – Determination of hardness (hardness between 10 IRHD and 100 IRHD)***

ISO 178, ***Plastics – Determination of flexural properties***

ISO 179 (all parts), ***Plastics – Determination of Charpy impact properties***

ISO 262, ***ISO general-purpose metric screw threads – Selected sizes for screws, bolts and nuts***

ISO 273, ***Fasteners – Clearance holes for bolts and screws***

ISO 527-2, ***Plastics – Determination of tensile properties – Part 2: Test conditions for moulding and extrusion plastics***

ISO 965-1, ***ISO general-purpose metric screw threads – Tolerances – Part 1: Principles and basic data***

ISO 965-3, ***ISO general-purpose metric screw threads – Tolerances – Part 3: Deviations for constructional screw threads***

ISO 3601-1, ***Fluid power systems – O-rings – Part 1: Inside diameters, cross-sections, tolerances and designation codes***

This document is only permissible for use by Anonymous User of University of Toronto. 3/9/2020 12:39:45 PM

UL COPYRIGHTED MATERIAL – NOT AUTHORIZED FOR FURTHER REPRODUCTION OR DISTRIBUTION WITHOUT PERMISSION FROM UL

Documents
Document Sharing Hub

Full document details: UL 60079-0 2019

ISO 3601-2, ***Fluid power systems – O-rings – Part 2: Housing dimensions for general applications***

ISO 4014, ***Hexagon head bolts – Product grades A and B***

ISO 4017, ***Hexagon head screws – Product grades A and B***

ISO 4026, ***Hexagon socket set screws with flat point***

ISO 4027, ***Hexagon socket set screws with cone point***

ISO 4028, ***Hexagon socket set screws with dog point***

ISO 4029, ***Hexagon socket set screws with cup point***

ISO 4032, ***Hexagon nuts, style 1 – Product grades A and B***

ISO 4762, ***Hexagon socket head cap screws***

ISO 4892-2, ***Plastics – Methods of exposure to laboratory light sources – Part 2: Xenon-arc lamps***

ISO 7380, ***Hexagon socket button head screws***

ISO 14583, ***Hexalobular socket pan head screws***

UL 347, ***High Voltage Industrial Control Equipment***

UL 486E, ***Equipment Wiring Terminals for use with Aluminum and/or Copper Conductors***

UL 508, ***Industrial Control Equipment***

~~**ANSI/**~~**UL 746B**, ***Polymeric Materials – Long-Term Property Evaluations***

~~**ANSI/**~~**UL 746C**, ***Polymeric Materials – Used in Electrical Equipment Evaluations***

UL 60034-1, ***Rotating electrical machines – Part 1: Rating and performance***

UL 60079-1, ***Explosive atmospheres – Part 1: Equipment protection by flameproof enclosures "d"***

UL 60079-26, ***Explosive atmospheres – Part 26: Equipment with Equipment Protection Level (EPL) Ga***

UL 60947-1, ***Low-voltage switchgear and controlgear – Part 1: General rules***

3 Terms and definitions

For the purposes of this document, the following terms and definitions apply.

ISO and IEC maintain terminological databases for use in standardization at the following addresses:

UL COPYRIGHTED MATERIAL – NOT AUTHORIZED FOR FURTHER REPRODUCTION OR DISTRIBUTION WITHOUT PERMISSION FROM UL

This document is only permissible for use by Anonymous User of University of Toronto. 3/9/2020 12:39:45 PM

Documents Document Sharing Hub

Full document details: UL 60079-0 2019

• IEC Electropedia: available at http://www.electropedia.org/

• ISO Online browsing platform: available at http://www.iso.org/obp

NOTE Additional definitions applicable to explosive atmospheres can be found in IEC 60050-426.

3.1
ambient temperature
temperature of the air or other media, in the immediate vicinity of the equipment or component

Note 1 to entry: This does not refer to the temperature of any process media, unless the equipment or component is totally immersed in the process media. See 5.1.1.

Note 2 to entry: If Ex Equipment or an Ex Component is located inside or adjacent to another piece of equipment, the "ambient temperature" is the temperature of the air or other media surrounding the Ex Equipment or Ex Component and may be higher than the ambient air surrounding the complete equipment due to the additional heat dissipated within the complete equipment.

Note 3 to entry: The ambient temperature referred to in the IEC 60079 series is only related to the explosion safety of the Ex Equipment or Ex Component.

3.2
area, hazardous
area in which an explosive atmosphere is present, or may be expected to be present, in quantities such as to require special precautions for the construction, installation and use of equipment

3.3
area, non-hazardous
area in which an explosive atmosphere is not expected to be present in quantities such as to require special precautions for the construction, installation and use of equipment

3.4
associated apparatus
electrical apparatus which contains both intrinsically safe and non-intrinsically safe circuits and is constructed so that the non-intrinsically safe circuits cannot adversely affect the intrinsically safe circuits

Note 1 to entry: Associated apparatus is either:

a) additionally protected by a Type of Protection suitable for use in the appropriate explosive atmosphere, or

b) not protected by a Type of Protection suitable for use in the appropriate explosive atmosphere and therefore is not to be used within an explosive atmosphere

3.5
Ex associated equipment
auxiliary equipment used in conjunction with explosion-protected equipment to maintain specific aspects of the Type of Protection of the explosion-protected equipment

Note 1 to entry: Examples include special time/current relays for increased safety motors, pressurization control systems, power limits for encapsulated Ex Equipment, and the like.

Note 2 to entry: Ex associated equipment is either:

a) additionally protected by a Type of Protection suitable for use in the appropriate explosive atmosphere; or

b) not protected by a Type of Protection suitable for use in the appropriate explosive atmosphere and therefore is not to be used within an explosive atmosphere.

This document is only permissible for use by Anonymous User of University of Toronto. 3/9/2020 12:39:45 PM

UL COPYRIGHTED MATERIAL – NOT AUTHORIZED FOR FURTHER REPRODUCTION OR DISTRIBUTION WITHOUT PERMISSION FROM UL

Documents
Document Sharing Hub

Full document details: UL 60079-0 2019

Note 3 to entry: A similar concept is applied to intrinsic safety where it is referred to as “associated apparatus”. See 3.4. A single piece of equipment may include both Ex associated equipment and associated apparatus.

3.6
auto-ignition temperature
AIT
lowest temperature (of a surface) at which, under specified conditions (according to IEC 60079-20-1), an ignition of a flammable gas or vapour in mixture with air or air/inert gas occurs

3.7
cells and batteries

3.7.1
battery
one or more cells fitted with devices necessary for use, for example, terminals, marking and protective devices

Note 1 to entry: See Figure 1 for examples of typical battery constructions.

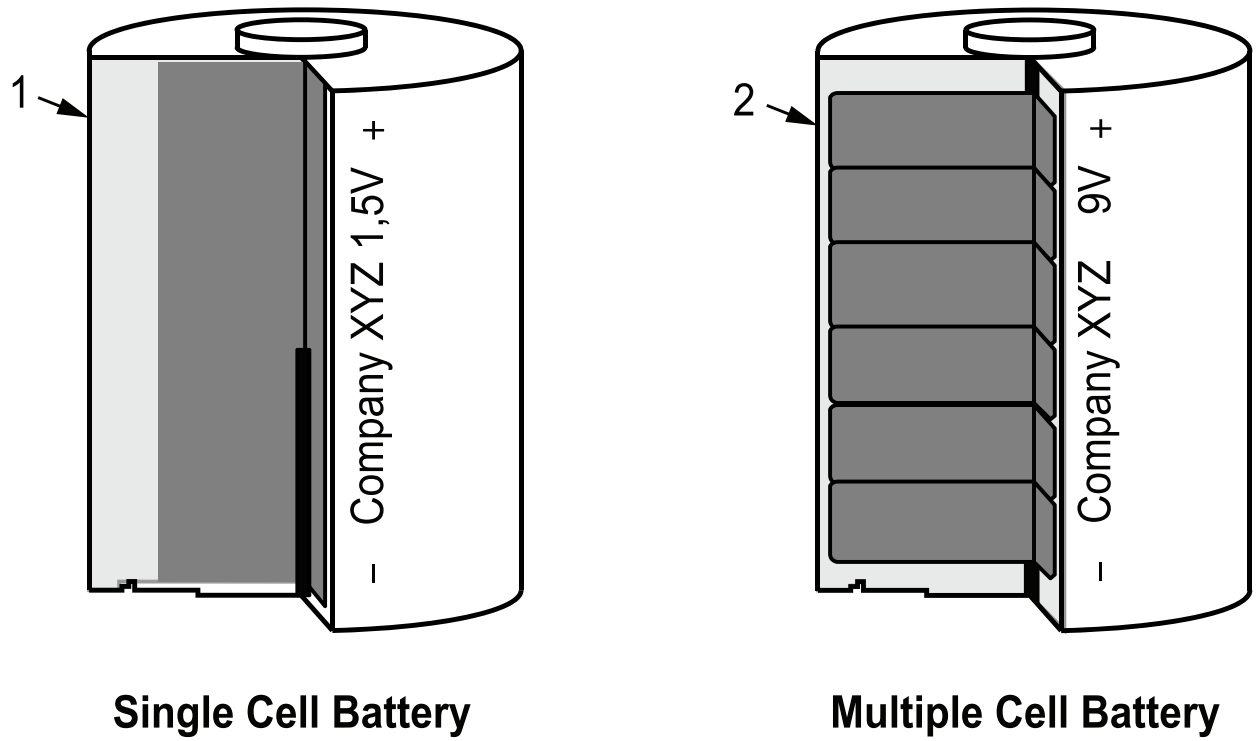

su3168

Key
1 Cell Case/Battery Case
2 Batter Cases

Figure 1
Typical battery examples

This document is only permissible for use by Anonymous User of University of Toronto. 3/9/2020 12:39:45 PM

UL COPYRIGHTED MATERIAL –
NOT AUTHORIZED FOR FURTHER REPRODUCTION OR
DISTRIBUTION WITHOUT PERMISSION FROM UL

Documents
Document Sharing Hub

Full document details: UL 60079-0 2019

3.7.2
capacity
electric charge which a battery or cell can deliver under specified discharge conditions

Note 1 to entry: The SI unit for electric charge, or quantity of electricity, is the coulomb (1 C = 1 A × s) but in practice, capacity is usually expressed in ampere hours (Ah).

3.7.3
cell
basic functional unit, consisting of an assembly of electrodes, electrolyte, case, terminals and usually separators, that is a source of electric energy obtained by direct conversion of chemical energy

Note 1 to entry: See primary cell and secondary cell.

3.7.4
charging
operation during which a secondary cell or battery is supplied with electric energy from an external circuit which results in chemical changes within the cell and thus the storage of energy as chemical energy

3.7.5
deep discharge
event which reduces a cell voltage below that recommended by the cell or battery manufacturer

3.7.6
maximum open-circuit voltage
<cell or battery>
voltage of a new primary battery or of a fully charged secondary battery when the discharge current is zero

Note 1 to entry: See Table 13 and Table 14 which show the maximum open-circuit voltage for acceptable cells.

3.7.7
nominal voltage
<cell or battery>
suitable approximate value of the voltage used to designate or identify a cell or battery or an electrochemical system

3.7.8
vented cell or battery
secondary cell, or battery, having a cover provided with an opening through which gaseous products may escape

3.7.9
primary cell or battery
cell or battery which is not designed to be electrically recharged

3.7.10
reverse charging
act of forcing current through either a primary cell or secondary cell in the same direction as the normal flow, generally due to the reverse polarity in an expired cell of a series connected battery

3.7.11
sealed cell
secondary cell which remains closed and does not release either gas or liquid when operated within the limits specified by the cell manufacturer

UL COPYRIGHTED MATERIAL – NOT AUTHORIZED FOR FURTHER REPRODUCTION OR DISTRIBUTION WITHOUT PERMISSION FROM UL

This document is only permissible for use by Anonymous User of University of Toronto. 3/9/2020 12:39:45 PM

Documents
Document Sharing Hub

Note 1 to entry: A sealed cell is often equipped with a safety device to protect against a dangerously high internal pressure and is designed to operate during its life in its original sealed state.

3.7.12
valve-regulated cell or battery
cell or battery which is closed under normal conditions but which has an arrangement which allows the escape of gas if the internal pressure exceeds a pre-determined value

Note 1 to entry: The cell cannot normally receive an addition to the electrolyte.

3.7.13
secondary cell or battery
cell which is designed to be electrically recharged

Note 1 to entry: The recharge is accomplished by way of a reversible chemical reaction.

3.7.14
battery compartment
compartment of the equipment that accommodates one or more cells and batteries

Note 1 to entry: The battery compartment is an integral part of the equipment.

Note 2 to entry: A battery compartment may be a battery container.

3.7.15
battery container
enclosure to contain one or more cells or batteries

Note 1 to entry: See Figure 2 for examples of typical battery constructions.

This document is only permissible for use by Anonymous User of University of Toronto. 3/9/2020 12:39:45 PM

UL COPYRIGHTED MATERIAL –
NOT AUTHORIZED FOR FURTHER REPRODUCTION OR
DISTRIBUTION WITHOUT PERMISSION FROM UL

Documents
Document Sharing Hub

Full document details: UL 60079-0 2019

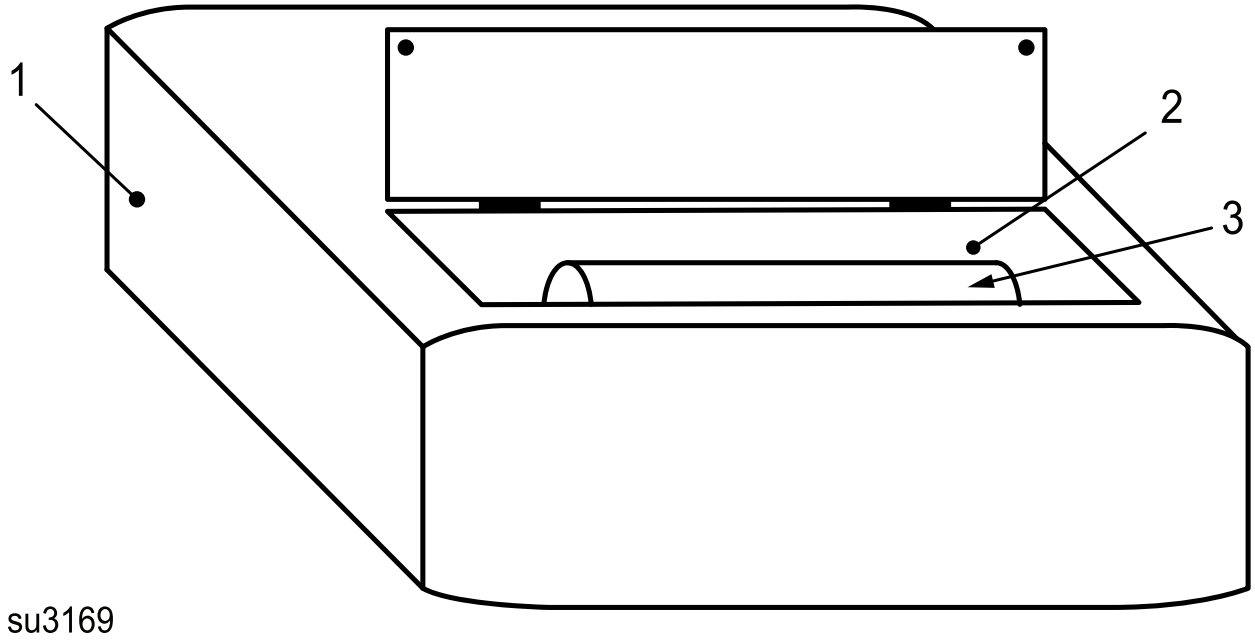

Key
1 Equipment
2 Battery Compartment
3 Cell/Battery/Replaceable Battery Pack

Figure 2
Typical battery compartment

This document is only permissible for use by Anonymous User of University of Toronto. 3/9/2020 12:39:45 PM

UL COPYRIGHTED MATERIAL –
NOT AUTHORIZED FOR FURTHER REPRODUCTION OR
DISTRIBUTION WITHOUT PERMISSION FROM UL

Documents
Document Sharing Hub

Full document details: UL 60079-0 2019

3.7.16
battery case
cell case
cell or battery enclosure that is an integral part of the construction of the cell or battery

Note 1 to entry: The case can be sealed, valve-regulated, or vented.

3.7.17
replaceable battery pack
assembly consisting of one or more interconnected cells, along with any integrated protective components, which form a complete replaceable battery

Note 1 to entry: See Figure 3 for examples of typical replaceable battery pack construction.

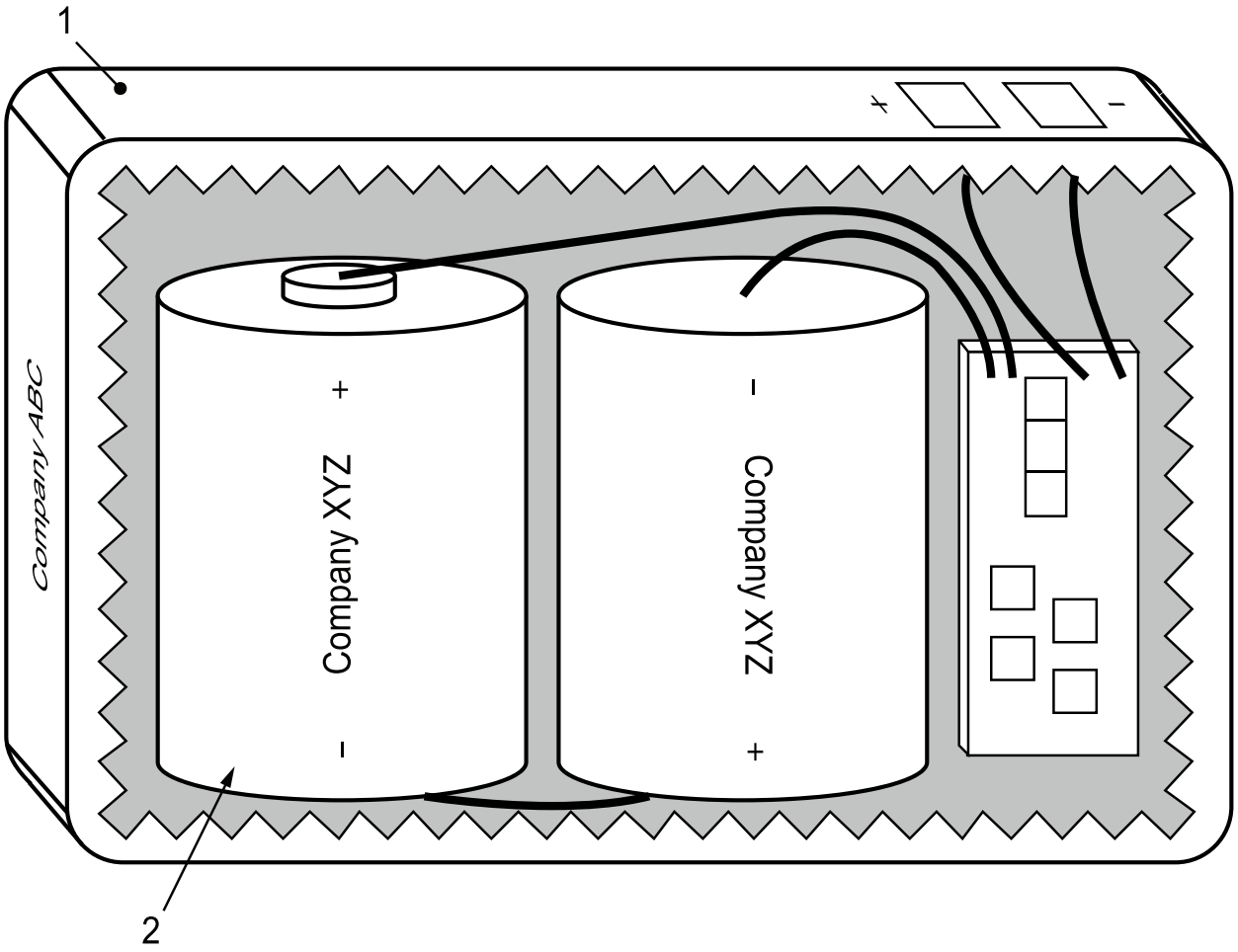

su3170

Key
1 Battery Container
2 Cell/Battery

Figure 3
Typical replaceable battery pack

UL COPYRIGHTED MATERIAL –
NOT AUTHORIZED FOR FURTHER REPRODUCTION OR
DISTRIBUTION WITHOUT PERMISSION FROM UL

This document is only permissible for use by Anonymous User of University of Toronto. 3/9/2020 12:39:45 PM

Documents
Document Sharing Hub

3.8
breathing device
device which permits an exchange between the atmosphere within an enclosure and the surrounding atmosphere and which maintains the integrity of the Type of Protection

3.9
bushing
device carrying one or more conductors, insulated or bare, through an internal or external wall of an enclosure

3.10
cable gland
device permitting the introduction of one or more electric or fibre optic cables into an electrical Ex Equipment enclosure so as to maintain the relevant Type of Protection and provide a degree of strain relief

Note 1 to entry: See Figure A.1 for illustration of the terms used for cable glands.

3.10.1
clamping device
<cable gland>
element of a cable gland for preventing tension or torsion in the cable from being transmitted to the connections

3.10.2
compression element
<cable gland>
element of a cable gland compressing or displacing the sealing ring

3.10.3
sealing ring
<cable gland>
element used in a cable gland to ensure the sealing between the cable gland and the cable

3.10.4
Ex Equipment cable gland
<cable gland>
cable gland tested separately from the equipment enclosure but having an Ex Equipment certificate and which is intended to be fitted to an Ex Equipment enclosure

Note 1 to entry: This does not preclude an Ex Component certificate for cable glands.

3.10.5
cable transit device
<cable gland>
an entry device, intended for one or more electric or fibre optic cables, with a seal made up of one or more separate elastomeric modules or parts of modules (modular internal seal), which are compressed together when the device is assembled and mounted as intended

Note 1 to entry: Cable transit devices serve as Ex Equipment Blanking Elements when the elastomeric modules provided allow for this function.

3.11
casting
<non-metallic compound>
process of pouring a liquid compound at normal ambient pressure into a cast

UL COPYRIGHTED MATERIAL –
NOT AUTHORIZED FOR FURTHER REPRODUCTION OR
DISTRIBUTION WITHOUT PERMISSION FROM UL
Documents
Document Sharing Hub
This document is only permissible for use by Anonymous User of University of Toronto. 3/9/2020 12:39:45 PM
Full document details: UL 60079-0 2019

3.12
certificate
document that conveys the assurance of the conformity of a product, process, system, person, or organization with specified requirements

Note 1 to entry: The certificate is either the supplier's declaration of conformity or the purchaser's recognition of conformity or certification (as a result of action by a third party) as defined in ISO/IEC 17000.

3.12.1
Ex Component Certificate
certificate prepared for an Ex Component (see 3.36DV)

3.12.2
Ex Equipment Certificate
certificate prepared for Ex Equipment

3.13
coating
material applied to a surface

3.14
conformal coating
electrical insulating material applied as a coating to loaded printed circuit boards to produce a thin layer conforming to the surface in order to provide a protective barrier against deleterious effects from environmental conditions

3.15
compound
<for encapsulation>
any thermosetting, thermoplastic, epoxy resin or elastomeric materials with or without fillers and/or additives, in their solid state

3.16
conduit entry
means of introducing a conduit into Ex Equipment so as to maintain the relevant Type of Protection

3.17
connection facilities
terminals, screws or other parts, used for the electrical connection of conductors

3.18
connections, factory
terminations intended for connection during a manufacturing process under controlled conditions

3.19
connections, field-wiring
terminations intended for connection by the installer in the field

3.20
continuous operating temperature
COT
temperature range which ensures the stability and integrity of the material for the expected life of the equipment, or part, in its intended application

UL COPYRIGHTED MATERIAL
NOT AUTHORIZED FOR FURTHER REPRODUCTION OR
DISTRIBUTION WITHOUT PERMISSION FROM UL

This document is only permissible for use by Anonymous User of University of Toronto. 3/9/2020 12:39:45 PM

Documents
Document Sharing Hub

3.21
converter
<for use with electric machines>
unit for electronic power conversion, changing one or more electrical characteristics and comprising one or more electronic switching devices and associated components, such as transformers, filters, commutation aids, controls, protections, and auxiliaries, if any

Note 1 to entry: A converter is also known by other terms. For example, a frequency converter, a converter drive, an inverter drive, a variable speed drive, an adjustable speed drive (ASD), or a variable frequency drive (VFD).

3.21.1
converter, soft-start
<for use with electric machines>
converter which limits the input current to the electric machine during the starting process

Note 1 to entry: It is intended that the soft-start converter is used only during the starting process and is then isolated from the power system or bypassed when the electric machine is running.

3.22
degree of protection of enclosure
IP
numerical classification according to IEC 60529 or IEC 60034-5 (as applicable) preceded by the symbol IP applied to the enclosure of equipment to provide:

– protection of persons against contact with, or approach to, live parts and against contact with moving parts (other than smooth rotating shafts and the like) inside the enclosure,

– protection of the equipment against ingress of solid foreign objects, and

– where indicated by the classification, protection of the equipment against harmful ingress of water

Note 1 to entry: The detailed test requirements for rotating electric machines are in IEC 60034-5.

Note 2 to entry: The enclosure which provides the degree of protection IP is not necessarily the same as the equipment enclosure providing the Type of Protection listed in Clause 1.

Note 3 to entry: An enclosure which provides the degree of protection required by one of the types of protection listed in Clause 1 will have been subjected to other tests prior to the tests for degree of protection. See 26.4.

3.23
draining device
device which permits liquids to flow out from an enclosure and which maintains the integrity of the Type of Protection

3.24
dust
generic term including both combustible dust and combustible flyings

3.24.1DV DR ***Modification of Clause 3.24.1 to replace with the following:***

combustible dust
~~finely divided solid particles, 500 µm or less in nominal size, which may form explosive mixtures with air at standard atmospheric pressure and temperatures~~ dust particles that are 500 microns or smaller (material passing a U. S. No. 35 Standard Sieve as defined in

UL COPYRIGHTED MATERIAL – NOT AUTHORIZED FOR FURTHER REPRODUCTION OR DISTRIBUTION WITHOUT PERMISSION FROM UL

This document is only permissible for use by Anonymous User of University of Toronto. 3/9/2020 12:39:45 PM

AVA Documents Document Sharing Hub

ASTM E 11, Standard Specification for Wire Cloth and Sieves for Testing Purposes) and present a fire or explosion hazard when dispersed and ignited in air.

Note 1 to entry: This includes dust and grit as defined in ISO 4225.

Note 2 to entry: The term solid particles is intended to address particles in the solid phase and not the gaseous or liquid phase, but does not preclude a hollow particle.

Note 3 to entry: See ASTM E 1226, Standard Test Method for Explosibility of Dust Clouds, or ISO 6184-1, Explosion protection systems - Part 1: Determination of explosion indices of combustible dusts in air, for procedures for determining the explosibility of dusts. Dusts are considered to be combustible dusts unless it has been confirmed by test that they are not combustible dusts per ISO 6184/1 or ASTM E1226.

3.24.1.1DV DR ***Modification of Clause 3.24.1.1 to replace with the following:***

3.24.1.1DV.1.1
conductive dust
combustible metal dust ~~with electrical resistivity equal to or less than 1 kΩ·m~~

~~**Note 1 to entry: ISO/IEC 80079-20-2 contains the test method for determining the electrical resistivity of dusts.**~~

3.24.1.2DV DR ***Modification of Clause 3.24.1.2 to replace with the following:***

3.24.1.2DV.1.2
non-conductive dust
combustible dust, other than metal dust ~~with electrical resistivity greater than 1 kΩ·m~~

~~**Note 1 to entry: ISO/IEC 80079-20-2 contains the test method for determining the electrical resistivity of dusts.**~~

3.24.2
combustible flyings
solid particles, including fibres, where one dimension is greater than 500 µm in nominal size, which may form an explosive mixture with air at standard atmospheric pressure and temperature

Note 1 to entry: One dimension has a high ratio when compared to the other two dimensions

Note 2 to entry: Examples of flyings include carbon fibre, rayon, cotton (including cotton linters and cotton waste) sisal, jute, hemp, cocoa fibre, oakum and baled waste kapok.

3.25
dust-tight enclosure
enclosure capable of excluding the ingress of observable dust particle deposits

3.26
dust-protected enclosure
enclosure in which the ingress of dust is not totally excluded, but is unlikely to enter in sufficient quantity to interfere with the safe operation of the equipment and does not accumulate in a position within the enclosure where it is liable to cause an ignition hazard

3.27
duty cycle

UL COPYRIGHTED MATERIAL – NOT AUTHORIZED FOR FURTHER REPRODUCTION OR DISTRIBUTION WITHOUT PERMISSION FROM UL

This document is only permissible for use by Anonymous User of University of Toronto. 3/9/2020 12:39:45 PM

Documents
Document Sharing Hub

Full document details: UL 60079-0 2019

repetitive variation of load in which the cycle time is too short for thermal equilibrium to be attained in the first cycle

[SOURCE: IEC 60050-411:1996, 411-51-7]

3.28
elastomer
a macromolecular material which returns rapidly to approximately its initial dimensions and shape after substantial deformation by a weak stress and release of the stress

Note 1 to entry: The definition applies to room temperature test conditions.

[SOURCE: IEC 60050-212:2010, 212-14-05]

3.29
encapsulation
process of applying a compound to enclose an electrical device(s) by suitable means

3.30
enclosure
all the walls, doors, covers, cable glands, rods, spindles, shafts, etc. which contribute to the Type of Protection or the degree of protection IP of the equipment

3.31
equipment
general term including apparatus, fittings, devices, components, and the like used as a part of, or in connection with, an installation

3.31.1
equipment, electrical
items applied as a whole or in part for the utilization of electrical energy

Note 1 to entry: These include, amongst others, items for the generation, transmission, distribution, storage, measurement, regulation, conversion and consumption of electrical energy and items for telecommunications.

3.31.2
equipment, fixed
equipment fastened to a support, or otherwise secured in a specific location when energized

3.31.3
equipment, personal
equipment intended to be worn by and in contact with a person's body during operation

3.31.4
equipment, portable
equipment intended to be carried by a person during operation

Note 1 to entry: Portable equipment carried by a person during operation is sometimes referred to as hand-held equipment.

3.31.5
equipment, transportable
equipment not intended to be carried by a person during operation nor intended for fixed installation

This document is only permissible for use by Anonymous User of University of Toronto. 3/9/2020 12:39:45 PM

UL COPYRIGHTED MATERIAL – NOT AUTHORIZED FOR FURTHER REPRODUCTION OR DISTRIBUTION WITHOUT PERMISSION FROM UL

Documents
Document Sharing Hub

Full document details: UL 60079-0 2019

3.32
equipment grouping
classification system of equipment related to the explosive atmosphere for which they are intended to be used

Note 1 to entry: IEC 60079-0 identifies three equipment groups:

Group I, equipment for mines susceptible to fire damp;

Group II, which is divided into sub-groups, equipment for all places with an explosive gas atmosphere other than mines susceptible to fire damp

Group III, which is divided into sub-groups, equipment for all places with an explosive dust atmosphere other than mines susceptible to fire damp

3.33DV DR ***Modification of Clause 3.33 to replace with the following:***

Equipment Protection level
EPL
Level of Protection assigned to equipment based on its likelihood of becoming a source of ignition and distinguishing the differences between explosive gas atmospheres, explosive dust atmospheres, and the explosive atmospheres in mines susceptible to firedamp

Note 1 to entry: Although the marking identifying the equipment protection level (EPL) may appear on equipment evaluated against this standard, the 2017 NEC does not recognize the concept of employing the equipment protection level in a complete risk assessment during the area classification of an installation. EPLs are designated as G for gas, D for dust, or M for mining and are then followed by a letter (a, b, or c) to give the user a better understanding as to whether the equipment provides either (a) a "very high," (b) a "high," or (c) an "enhanced" level of protection against ignition of an explosive atmosphere. Therefore, this document reflects that a very high level of protection (a) is used for Zone 0 and Zone 20, a high level of protection (b) is used for Zone 1 and Zone 21 and an enhanced level of protection (c) is used for Zone 2 and Zone 22.

3.33.1
EPL Ma
equipment for installation in a mine susceptible to firedamp, having a "very high" Level of Protection, which has sufficient security that it is unlikely to become an ignition source in normal operation, during expected malfunctions or during rare malfunctions, even when left energized in the presence of an outbreak of gas

3.33.2
EPL Mb
equipment for installation in a mine susceptible to firedamp, having a "high" Level of Protection, which has sufficient security that it is unlikely to become a source of ignition in normal operation or during expected malfunctions in the time span between there being an outbreak of gas and the equipment being de-energized

3.33.3
EPL Ga
equipment for explosive gas atmospheres, having a "very high" Level of Protection, which is not a source of ignition in normal operation, during expected malfunctions or during rare malfunctions

3.33.4
EPL Gb
equipment for explosive gas atmospheres, having a "high" Level of Protection, which is not a source of ignition in normal operation or during expected malfunctions

3.33.5

UL COPYRIGHTED MATERIAL
NOT AUTHORIZED FOR FURTHER REPRODUCTION OR
DISTRIBUTION WITHOUT PERMISSION FROM UL

This document is only permissible for use by Anonymous User of University of Toronto. 3/9/2020 12:39:45 PM

Documents
Document Sharing Hub

EPL Gc
equipment for explosive gas atmospheres, having an "enhanced" Level of Protection, which is not a source of ignition in normal operation and which may have some additional protection to ensure that it remains inactive as an ignition source in the case of regular expected occurrences (for example failure of a lamp)

3.33.6
EPL Da
equipment for explosive dust atmospheres, having a "very high" Level of Protection, which is not a source of ignition in normal operation, during expected malfunctions, or during rare malfunctions

3.33.7
EPL Db
equipment for explosive dust atmospheres, having a "high" Level of Protection, which is not a source of ignition in normal operation or during expected malfunctions

3.33.8
EPL Dc
equipment for explosive dust atmospheres, having an "enhanced" level of protection, which is not a source of ignition in normal operation and which may have some additional protection to ensure that it remains inactive as an ignition source in the case of regular expected occurrences (for example failure of a lamp)

3.34
Ex Equipment blanking element
blanking element tested separately from the Ex Equipment enclosure but having an Ex Equipment certificate and which is intended to be fitted to an Ex Equipment enclosure

Note 1 to entry: This does not preclude an Ex Component certificate for blanking elements.

3.35
Ex Equipment thread adapter
thread adapter tested separately from the Ex Equipment enclosure but having an Ex Equipment certificate and which is intended to be fitted to an Ex Equipment enclosure

Note 1 to entry: This does not preclude an Ex Component certificate for thread adapters.

3.36DV DR ***Modification of Clause 3.36 to replace with the following:***

3.36DV
Ex Component
equipment intended to be part of Ex Equipment, ~~marked with the symbol "U",~~ which is not intended to be used alone, and requires additional consideration when incorporated into Ex Equipment

3.37
Ex Equipment
explosion-protected equipment

Note 1 to entry: Such equipment often includes Ex Components, but additional evaluation is always required as part of their incorporation into equipment.

3.38
explosive atmosphere

UL COPYRIGHTED MATERIAL –
NOT AUTHORIZED FOR FURTHER REPRODUCTION OR
DISTRIBUTION WITHOUT PERMISSION FROM UL

This document is only permissible for use by Anonymous User of University of Toronto. 3/9/2020 12:39:45 PM

Documents
Document Sharing Hub

Full document details: UL 60079-0 2019

mixture with air, under atmospheric conditions, of flammable substances in the form of gas, vapour, or dust which, after ignition, permits self-sustaining propagation

3.39
explosive dust atmosphere
mixture with air, under atmospheric conditions, of flammable substances in the form of dust, which, after ignition, permits self-sustaining propagation

3.40
explosive gas atmosphere
mixture with air, under atmospheric conditions, of flammable substances in the form of gas or vapour, which, after ignition, permits self-sustaining flame propagation

3.41
explosive test mixture
specified explosive mixture used for the testing of equipment for explosive gas atmospheres

3.42
fault, countable
fault which occurs in parts of electrical equipment conforming to the constructional requirements of the standard for the Type of Protection being considered

3.43
fault, non-countable
fault which occurs in parts of electrical apparatus not conforming to the constructional requirements of the standard for the Type of Protection being considered

3.44
firedamp
flammable mixture of gases naturally occurring in a mine

Note 1 to entry: Firedamp consists mainly of methane, but always contains small quantities of other gases, such as nitrogen, carbon dioxide, and hydrogen, and sometimes ethane and carbon monoxide. The terms firedamp and methane are used frequently in mining practice as synonyms.

3.45
free space
intentionally created space surrounding components or space inside components

3.46
fuse
a device that by the fusing of one or more of its specially designed and proportioned components intended to melt under the action of current exceeding some definite value for a definite period of time, opens the circuit in which it is inserted by breaking the current when this exceeds a given value for a sufficient time

3.47
galvanic isolation
arrangement within equipment which permits the transfer of signals or power between two circuits without any direct electrical connection between the two

Note 1 to entry: Galvanic isolation frequently utilizes either magnetic (transformer or relay) or opto-coupled elements.

UL COPYRIGHTED MATERIAL –
NOT AUTHORIZED FOR FURTHER REPRODUCTION OR
DISTRIBUTION WITHOUT PERMISSION FROM UL

3.48
gasket

This document is only permissible for use by Anonymous User of University of Toronto. 3/9/2020 12:39:45 PM

Documents
Document Sharing Hub

Full document details: UL 60079-0 2019

compressible element provided in a joint of an enclosure to provide a degree of protection against the ingress of solid foreign objects or against the ingress of water

3.49
gas
gaseous state of a substance that cannot reach equilibrium with its liquid or solid state in the temperature and pressure range of interest

Note 1 to entry: This is a simplification of the scientific definition, and merely requires that the substance is above its boiling point or sublimation point at the ambient temperature and pressure.

3.50
hybrid mixture

mixture of a flammable gas or vapour with a dust

Note 1 to entry: According to ISO/IEC 80079-20-2, the term “dust” is defined as including both combustible dust and combustible flyings

3.51
infallible separation
separation between electrically conductive parts, not considered as subject to short circuits, when in conformity with the “infallible” constructional requirements of the standard for the Type of Protection being considered

3.52
joint
place where the corresponding surfaces of two parts of an enclosure, or the conjunction of two enclosures, come together

3.53
Level of Protection
subdivision of a Type of Protection, correlating with the Equipment Protection Level, that differentiates the likelihood of the equipment becoming a source of ignition

Note 1 to entry: For example, Type of Protection intrinsic safety “i” is subdivided into Levels of Protection “ia”, “ib”, and “ic; which correlate with Equipment Protection Levels Ga, Gb, and Gc (for explosive gas atmospheres).

3.54
limiting temperature
maximum permissible temperature for equipment or parts of equipment equal to the lower of the two temperatures determined by:

a) the maximum surface temperature;

b) the thermal stability of the materials used

3.55
lower flammable limit
LFL
concentration of flammable gas or vapour in air below which an explosive gas atmosphere does not form (see IEC 60079-20-1)

Note 1 to entry: For the purposes of Ex Equipment, this was previously referred to as the lower explosive limit (LEL).

UL COPYRIGHTED MATERIAL – NOT AUTHORIZED FOR FURTHER REPRODUCTION OR DISTRIBUTION WITHOUT PERMISSION FROM UL

This document is only permissible for use by Anonymous User of University of Toronto. 3/9/2020 12:39:45 PM

Documents
Document Sharing Hub

Full document details: UL 60079-0 2019

Note 2 to entry: The concentration may be expressed as either a volume fraction or a mass per unit volume.

3.56
malfunction
situation where equipment or components do not perform their intended function with respect to explosion protection

Note 1 to entry: For the purposes of this standard this can happen due to a variety of reasons, including:

– failure of one (or more) of the component parts of the equipment or components;

– external disturbances (e.g. shocks, vibration, electromagnetic fields);

– design error or deficiency (e.g. software errors);

– disturbance of the power supply or other services;

– loss of control by the operator (especially for portable equipment).

Note 2 to entry: Some earlier editions of the Type of Protection standards referred to a “malfunction” as a “fault”.

3.56.1
malfunction, expected
disturbances or equipment malfunctions which normally occur in practice

3.56.2
malfunction, rare
type of malfunction, which may happen, but only in rare instances

Note 1 to entry: Two independent expected malfunctions which, separately, would not create a source of ignition, but which, in combination, do create a source of ignition, are regarded as a single rare malfunction

3.57
maximum surface temperature
highest temperature which is attained in service under the most adverse conditions (but within the specified tolerances) by any part or surface of Ex Equipment

3.58
minimum ignition temperature of an explosive gas atmosphere
lowest temperature of a heated surface which, under specified conditions according to IEC 60079-20-1, will ignite a flammable substance in the form of a gas or vapour mixture with air

Note 1 to entry: This term and “Auto-Ignition Temperature” are often used interchangeably

3.59
minimum ignition temperature of a dust layer
lowest temperature of a hot surface at which ignition occurs in a dust layer under specified test conditions

Note 1 to entry: The ignition temperature of a dust layer may be determined by the test method given in ISO/IEC 80079-20-2.

3.60
minimum ignition temperature of a dust cloud
lowest temperature of a hot surface on which the most ignitable mixture of the dust with air is ignited under specified test conditions

This document is only permissible for use by Anonymous User of University of Toronto. 3/9/2020 12:39:45 PM

UL COPYRIGHTED MATERIAL – NOT AUTHORIZED FOR FURTHER REPRODUCTION OR DISTRIBUTION WITHOUT PERMISSION FROM UL

Documents
Document Sharing Hub

Full document details: UL 60079-0 2019

Note 1 to entry: The ignition temperature of a dust cloud may be determined by the test method given in ISO/IEC 80079-20-2.

3.61
mist
liquid released through a small opening, at temperatures below its flash point, resulting in extremely small droplets forming a cloud

3.62
normal operation
operation of equipment conforming electrically and mechanically with its design specification and used within the limits specified by the manufacturer

Note 1 to entry: The limits specified by the manufacturer may include persistent operational conditions, e.g. operation on a duty cycle.

Note 2 to entry: Variation of the supply voltage within stated limits and any other operational tolerance is part of normal operation.

Note 3 to entry: For electric machines, normal operation is specified based on the duty type (S1...S10 per IEC 60034-1).

3.63
overvoltage category
numeral defining a transient overvoltage condition

Note 1 to entry: Overvoltage categories I, II, III and IV are used, see IEC 60664-1.

3.64
plastic
a material which contains as an essential ingredient a high polymer and which at some stage in its processing into finished products can be shaped by flow

Note 1 to entry: Elastomers, which are also shaped by flow, are not considered as plastics.

[SOURCE: IEC 60050-212:2010, 212-04-02]

3.65
pollution degree
numeral characterizing the expected pollution of the micro-environment

Note 1 to entry: Pollution degrees 1, 2, 3 and 4 are used, see IEC 60664-1.

3.66
propagating brush discharge
highly energetic electrostatic discharge from an insulating sheet, layer, or coating on a grounded conductive surface or from a material of high resistivity and high breakdown voltage with the two surfaces highly charged to opposite polarity

3.67
protective device
device provided to interrupt an electric circuit in case a parameter exceeds a predetermined value

Note 1 to entry: Parameters often include current, temperature, pressure flow etc.

3.68
pyrophoric substance
substance that ignites spontaneously on exposure to air (for example phosphorus) or water (for example potassium or sodium)

UL COPYRIGHTED MATERIAL – NOT AUTHORIZED FOR FURTHER REPRODUCTION OR DISTRIBUTION WITHOUT PERMISSION FROM UL

This document is only permissible for use by Anonymous User of University of Toronto. 3/9/2020 12:39:45 PM

Documents
Document Sharing Hub

Note 1 to entry: Pyrophoric substances are outside the scope of IEC 60079-0

3.69
radio frequency
electromagnetic waves from 9 kHz to 60 GHz

3.69.1
continuous transmission
transmission where the duration of the pulse is greater than half of the thermal initiation time

3.69.2
pulsed transmission
transmission where the duration of the pulse is shorter than half of the thermal initiation time, but the time between two consecutive pulses is longer than three times the thermal initiation time

3.69.3
thermal initiation time
time (over which the threshold power is averaged) during which energy deposited by the spark accumulates in a small volume of gas around it without significant thermal dissipation

Note 1 to entry: For times shorter than the thermal initiation time the total energy deposited by the spark will determine whether or not ignition occurs. For increasingly longer times, the power or rate at which energy is deposited becomes the determining factor for ignition.

3.69.4
threshold energy
Z_{th}
for a pulsed radio-frequency discharge, the maximum energy of the single pulse which can be extracted from the receiving body

3.69.5
threshold power
P_{th}
effective output power of the transmitter multiplied by the antenna gain

Note 1 to entry: The gain is produced by an antenna concentrating radiation in a particular direction and is always related to a specified reference antenna

Note 2 to entry: The threshold power is considered to be equal to the Effective Isotropic Radiated Power (EIRP) per ITU-R BS.561-2.

3.69.6
antenna gain
gain produced by an antenna concentrating radiation in a particular direction

Note 1 to entry: The gain of antennas is frequently less than unity.

3.70
rated value
value, assigned generally by the manufacturer, for a specified operating condition of a component, device or apparatus

3.71
rated insulation voltage
RMS withstand voltage value assigned by the manufacturer to the equipment or to a part of it, characterizing the specified (long-term) withstand capability of its insulation

UL COPYRIGHTED MATERIAL – NOT AUTHORIZED FOR FURTHER REPRODUCTION OR DISTRIBUTION WITHOUT PERMISSION FROM UL

This document is only permissible for use by Anonymous User of University of Toronto. 3/9/2020 12:39:45 PM

Documents
Document Sharing Hub

Full document details: UL 60079-0 2019

Note 1 to entry: The rated insulation voltage is not necessarily equal to the rated voltage of equipment which is primarily related to functional performance.

3.72
rating
set of rated values and operating conditions

3.73
recurring peak voltage
maximum peak value of periodic excursions of the voltage waveform resulting from distortions of an AC voltage or from AC components superimposed on a DC voltage

Note 1 to entry: Random overvoltages, for example due to occasional switching, are not considered as recurring peak voltages.

3.74
related drawing
drawing or document not listed in the certificate but linked to the schedule drawing, and used for example, for detailed manufacture of component parts

3.75
safety device
device intended for use inside or outside explosive atmospheres but required for or contributing to the safe functioning of equipment and protective systems with respect to the risks of explosion

3.76
schedule drawing
drawing or document listed in the certificate or test report

3.77
separation element
mechanical element, inside the equipment, which separates different parts of the equipment with different EPLs

Note 1 to entry: A separation element consists of a mechanical partition wall, which may be combined with a flameproof joint or natural ventilation.

3.78
serviceable condition
condition which permits a replacement or reclaimed component part to be used without prejudice to the performance or explosion protection aspects of the equipment, with due regard to the schedule drawings, as applicable, in which such a component part is used

3.79
service temperature
maximum or minimum temperature reached at specific points of the equipment when the equipment is operating at rated conditions, including ambient temperature and any external sources of heating or cooling(see 5.2)

Note 1 to entry: Equipment may reach different service temperatures in different parts.

3.80
solid insulation
electrical insulation material which is extruded or moulded, but not poured

UL COPYRIGHTED MATERIAL – NOT AUTHORIZED FOR FURTHER REPRODUCTION OR DISTRIBUTION WITHOUT PERMISSION FROM UL

This document is only permissible for use by Anonymous User of University of Toronto. 3/9/2020 12:39:45 PM

Documents
Document Sharing Hub

Note 1 to entry: Insulators fabricated from two or more pieces of electrical insulating material, which are solidly bonded together may be considered as solid. The term solid insulation describes the final form and not necessarily the form in which they are initially applied. For windings of electrical machines, the process of using varnish as a means of consolidating and insulating the winding is considered to result in solid insulation, irrespective of how the varnish is applied.

3.81
spacings, electrical
separation distances between conductive parts at different electrical potentials

3.81.1
clearance
shortest distance in air between two conductive parts

3.81.2
creepage distance
shortest distance along the surface of a solid insulating material, in contact with air, between two conductive parts

3.81.3
distance through casting compound
shortest distance through a casting compound between two conductive parts

3.81.4
distance through solid insulation
shortest distance through solid insulation between two conductive parts

3.81.5
distance under coating
shortest distance between conductive parts along the surface of an insulating medium covered with insulating coating

3.82
special fastener
specific form of fastening device in accordance with IEC 60079-0

3.83DV DR ***Delete Clause 3.83. This definition does not apply.***

~~**3.83**~~
~~**symbol "U"**~~
~~**suffix to the certificate number used to denote an Ex Component**~~

~~**Note 1 to entry: The symbol "U" is used to identify that the equipment is incomplete and is not suitable for installation without further evaluation.**~~

3.84DV DR ***Delete Clause 3.84. This definition does not apply.***

~~**3.84**~~
~~**symbol "X"**~~
~~**suffix to the certificate number used to denote Specific Conditions of Use for Ex Equipment**~~

~~**Note 1 to entry: The symbol "X" is used to provide a means of identifying that essential information for the installation, use, and maintenance of the equipment is contained within the certificate.**~~

UL COPYRIGHTED MATERIAL – NOT AUTHORIZED FOR FURTHER REPRODUCTION OR DISTRIBUTION WITHOUT PERMISSION FROM UL

This document is only permissible for use by Anonymous User of University of Toronto. 3/9/2020 12:39:45 PM

Documents
Document Sharing Hub

Full document details: UL 60079-0 2019

3.85
temperature class
classification system of Ex Equipment, based on its maximum surface temperature, related to the specific explosive gas atmosphere for which it is intended to be used

3.86
termination compartment
compartment containing connection facilities

3.87
test, routine
test to which each individual device is subjected during or after manufacture to ascertain whether it complies with certain criteria

3.88
test, type
test of one or more devices made to a certain design to show that the design meets certain specifications

3.89
Type of Protection
specific measures applied to equipment to avoid ignition of a surrounding explosive atmosphere

3.90
upper flammable limit
UFL
concentration of flammable gas or vapour in air above which an explosive gas atmosphere does not form (see IEC 60079-20-1)

Note 1 to entry: For the purposes of Ex Equipment, this was previously referred to as the upper explosive limit (UEL).

Note 2 to entry: The concentration may be expressed as either a volume fraction or a mass per unit volume.

3.91
vapour
gaseous state of a substance that can reach equilibrium with its liquid or solid state in the temperature and pressure range of interest

Note 1 to entry: This is a simplification of the scientific definition, and merely requires that the substance is below its boiling point or sublimation point at the ambient temperature and pressure.

3.92
void
unintentional space created as a consequence of the encapsulation or filling process

3.93
working voltage
highest RMS value of the AC or DC voltage across any particular insulation which can occur when the equipment is supplied at rated voltage

Note 1 to entry: Transients are disregarded.

Note 2 to entry: Both open-circuit conditions and normal operating conditions are taken into account.

This document is only permissible for use by Anonymous User of University of Toronto. 3/9/2020 12:39:45 PM

UL COPYRIGHTED MATERIAL –
NOT AUTHORIZED FOR FURTHER REPRODUCTION OR
DISTRIBUTION WITHOUT PERMISSION FROM UL

Documents
Document Sharing Hub

Full document details: UL 60079-0 2019