**National Differences For**

**UL 62275**

**Cable Management Systems - Cable Ties for Electrical Installations**

UL COPYRIGHTED MATERIAL –
NOT AUTHORIZED FOR FURTHER REPRODUCTION OR
DISTRIBUTION WITHOUT PERMISSION FROM UL

Documents
Document Sharing Hub

Provided by IHS under license with UL

No reproduction or networking permitted without license from IHS

Licensee=North Carolina State Univ/5618801100
Not for Resale, 12/07/2014 23:07:36 MST

Full document details: UL 62275 (ND) 2010

National Differences For

UL 62275

Cable Management Systems - Cable Ties for Electrical Installations

Edition: 1

Edition Date: February 26, 2010

***This revision is being issued to extend the UL effective date for UL 62275 to June 1, 2014. No changes to the requirements have been made.***

**This document provides a single listing of the National Differences included in the UL adoption of the corresponding IEC standard.**

All rights reserved. No part of this publication may be reproduced, stored in a retrieval system, or transmitted in any form by any means, electronic, mechanical photocopying, recording, or otherwise without prior permission of UL.

UL provides this standards document ″as is″ without warranty of any kind, either expressed or implied, including but not limited to, the implied warranties of merchantability or fitness for any purpose.

In no event will UL be liable for any special, incidental, consequential, indirect or similar damages, including loss of profits, lost savings, loss of data, or any other damages arising out of the use of or the inability to use this standards document, even if UL or an authorized UL representative has been advised of the possibility of such damage. In no event shall UL's liability for any damage ever exceed the price paid for this standards document, regardless of the form of the claim.

Users of the electronic versions of UL's Standards for Safety agree to defend, indemnify, and hold UL harmless from and against any loss, expense, liability, damage, claim, or judgment (including reasonable attorney's fees) resulting from any error or deviation introduced while purchaser is storing an electronic Standard on the purchaser's computer system.

Copyright © Underwriters Laboratories Inc.

UL COPYRIGHTED MATERIAL –
NOT AUTHORIZED FOR FURTHER REPRODUCTION OR
DISTRIBUTION WITHOUT PERMISSION FROM UL

Documents
Document Sharing Hub

Provided by IHS under license with UL

No reproduction or networking permitted without license from IHS

Licensee=North Carolina State Univ/5618801100
Not for Resale, 12/07/2014 23:07:36 MST

Full document details: UL 62275 (ND) 2010

Preface

This document provides a single listing of the technical National Differences included in the UL adoption of the corresponding IEC standard.

In its IEC-based standards, UL uses the notations indicated below to identify national difference type, and these types are additionally noted in this document. The standard may not use all types of these deviations.

D1 - These are deviations which are based on basic safety principles and requirements, elimination of which would compromise safety for U.S. consumers and users of products.

D2 - These are deviations based on safety practices. These are deviations for IEC requirements that may be acceptable, but adopting the IEC requirements would require considerable retesting or redesign on the manufacturer's part.

DC - These are deviations based on the component standards and will not be deleted until a particular component standard is harmonized with the IEC component standard.

DE - These are deviations based on editorial comments or corrections.

DR - These are deviations based on the national regulatory requirements.

Each national difference contains a description of what the national difference entails. Typically one of the following words is used to explain how the text of the national difference is to be applied to the base IEC text:

**Addition / Add - An addition entails adding a complete new numbered clause, subclause, table, figure, or annex. Addition is not meant to include adding select words to the base IEC text.**

**Deletion / Delete - A deletion entails complete deletion of an entire numbered clause, subclause, table, figure, or annex without any replacement text.**

**Modification / Modify - A modification is an altering of the existing base IEC text such as the addition, replacement or deletion of certain words or the replacement of an entire clause, subclause, table, figure, or annex of the base IEC text.**

UL COPYRIGHTED MATERIAL –
NOT AUTHORIZED FOR FURTHER REPRODUCTION OR
DISTRIBUTION WITHOUT PERMISSION FROM UL

Documents
Document Sharing Hub

Provided by IHS under license with UL

No reproduction or networking permitted without license from IHS
Full document details: UL 62275 (ND) 2010

Licensee=North Carolina State Univ/5618801100
Not for Resale, 12/07/2014 23:07:36 MST

## National Differences

**2DV.1 DC** ***Delete the normative reference to ISO 6988.***

**2DV.2 D1** ***Add the following to Clause 2:***

**2DV.2.1 In Canada, the following additional references apply:**

**C22.1-09**
***Canadian Electrical Code, Part I***

**CAN/CSA-C22.2 No. 0-M91 (R2006)**
***General requirements – Canadian Electrical Code, Part II***

**CAN/CSA-C22.2 No. 0.17-00 (R2004)**
***Evaluation of properties of polymeric materials***

**2DV.2.2 In the United States, the following additional references apply:**

**National Electrical Code (NEC®)**
***ANSI/NFPA 70-2008***

**UL 94**
***Standard for Tests for Flammability of Plastic Materials for Parts in Devices and Appliances***

**UL 746A**
***Standard for Polymeric Materials – Short Term Properties***

**UL 746B**
***Standard for Polymeric Materials – Long Term Property Evaluations***

**UL 2043**
***Fire Test for Heat and Visible Smoke Release for Discrete Products and their Accessories Installed in Air-Handling Spaces***

**2DV.2.3 In Canada and the United States, the following additional references apply:**

**IEC 60695-11-10**
***Test flames – 50 W horizontal and vertical flame test methods***

**ISO 9227: 1990**
***Corrosion tests in artificial atmospheres – Salt spray tests***

**In Mexico, these references do not apply.**

UL COPYRIGHTED MATERIAL –
NOT AUTHORIZED FOR FURTHER REPRODUCTION OR
DISTRIBUTION WITHOUT PERMISSION FROM UL

Documents
Document Sharing Hub

Provided by IHS under license with UL

No reproduction or networking permitted without license from IHS
Full document details: UL 62275 (ND) 2010

Licensee=North Carolina State Univ/5618801100
Not for Resale, 12/07/2014 23:07:36 MST

**2DV.2.4 In Mexico, the following references apply:**

**NMX-D-122-ANCE-1973**
***Test method for corrosion resistance of coated metal parts used in motor vehicles – Salt spray (fog)***

**NMX-J-417-ANCE-2005**
***Wires and cables – Convection laboratories ovens for evaluation of electrical insulation – Specifications and test methods***

**NMX-J-553-ANCE-2002**
***Wires and cables – Weather resistance of insulation or jacket of electrical conductors – Test method***

**3.1DV D1** ***Add the following note to the definition of cable tie:***

**NOTE DV.1 In Canada and the United States, Type 11 and Type 21 cable ties are classified in 6.2.1DV and 6.2.2DV.1. In Mexico, Type 11 and Type 21 are not recognized classifications.**

**3DV D1** ***Add the following terms to Clause 3:***

**3DV.1 Air-handling spaces – ducts or plenums used for environmental air and other spaces used for environmental air, such as above hung ceilings or below raised floors. This does not include plenums used for the removal of dust, loose stock, or vapour, or for ventilation of commercial-type cooking equipment.**

**3DV.2 Type test – test conducted on sample representing production.**

**4DV DC** ***Add the following to Clause 4:***

**4DV.1 In Canada, general requirements are given in CAN/CSA-C22.2 No. 0.**

**4DV.2 In Canada and the United States, an adhesive relied upon for securement of a fixing device shall be tested in accordance with the requirements in Annex DVA, Adhesives.**

**5.2DV D2** ***Modify the NOTE as follows:***

**Delete the last two sentences of the Note in 5.2.**

**5.2ADV D2** ***Add the following new paragraph:***

**When the equilibrium moisture content for a material is determined through a method agreed to by the manufacturer and the testing laboratory, the stabilization time in Table 1 may be reduced under the following conditions:**

**a) the product's moisture content in the as-received condition and after each appropriate conditioning is measured using a calibrated moisture analyzer device;**

**b) the samples are subjected to exposure to a constant temperature not exceeding 50 ±2 °C and relative humidity not exceeding 80 ±5 percent; and**

UL COPYRIGHTED MATERIAL –
NOT AUTHORIZED FOR FURTHER REPRODUCTION OR
DISTRIBUTION WITHOUT PERMISSION FROM UL

Documents
Document Sharing Hub

Provided by IHS under license with UL

No reproduction or networking permitted without license from IHS
Full document details: UL 62275 (ND) 2010

Licensee=North Carolina State Univ/5618801100
Not for Resale, 12/07/2014 23:07:36 MST

**c) the product's equilibrium moisture content is verified using a calibrated moisture analyzer device.**

**5.7DV D1 *Modify by adding the following text:***

**In Mexico, an oven as specified in NMX-J-417-ANCE-2005 is considered equivalent.**

**5.8DV D1 *Add the following paragraphs to 5.8:***

**5.8DV.1 A surface-mounted fixing device, the performance of which is dependent on the mounting surface or the mounting orientation, shall comply with all applicable tests when the device is assembled on the surfaces for which it is intended, and in each intended mounting orientation declared by the manufacturer. If the manufacturer does not make a declaration of mounting orientation or when it can be determined that a particular mounting orientation represents the most onerous condition, the results of tests in that orientation may represent all mounting orientations.**

**5.8DV.2 A fixing device, the performance of which is dependent on the mounting hole size, the thickness of the material to which it is to be mounted, or the mounting orientation, shall comply with all applicable tests when the device is assembled to the minimum and maximum thickness of each mounting surface and in each intended mounting orientation declared by the manufacturer. If the manufacturer does not make a declaration of mounting orientation or when it can be determined that a particular mounting orientation represents the most onerous condition, the results of tests in that orientation may represent all mounting orientations.**

**5.9DV.1 D2 *Replace the third paragraph with the following:***

**If the cable tie is too short to meet the diameter of the smallest test mandrel, then a test mandrel having a diameter of 9.5 mm shall be used.**

**5.9DV.2 DE *Replace the fifth paragraph with the following:***

**For the loop tensile strength tests, the mandrel shall be split in two equal parts and the cable ties positioned as shown in the top half of Figure 2DV.**

**5.9DV.3 D1 *Add the following paragraph after the fifth paragraph:***

**Cable ties having a low-profile locking device (head) with a parallel entry strap shall be mounted to the mandrel as shown in the lower half of Figure 2DV.**

**5.9DV.4 D1 *Add the following paragraph after the sixth paragraph:***

**The use of separate steel or aluminum conditioning mandrels is permitted. The conditioning mandrels need not be split but shall have a diameter approximately equivalent to the appropriate test mandrel, to allow the transfer of the sample to the test mandrel. Conditioned samples shall be carefully transferred to the appropriate test mandrel for carrying out the loop tensile strength test. Where it has been determined that the transfer of the samples from a conditioning mandrel to a test mandrel has influenced test results, an additional sample set shall be conditioned and tested.**

UL COPYRIGHTED MATERIAL –
NOT AUTHORIZED FOR FURTHER REPRODUCTION OR
DISTRIBUTION WITHOUT PERMISSION FROM UL

Documents
Document Sharing Hub

Provided by IHS under license with UL

No reproduction or networking permitted without license from IHS

Licensee=North Carolina State Univ/5618801100
Not for Resale, 12/07/2014 23:07:36 MST

Full document details: UL 62275 (ND) 2010

**Figure 2DV D1** ***Replace Figure 2 with the following:***

UL COPYRIGHTED MATERIAL –
NOT AUTHORIZED FOR FURTHER REPRODUCTION OR
DISTRIBUTION WITHOUT PERMISSION FROM UL

Documents
Document Sharing Hub

Provided by IHS under license with UL

No reproduction or networking permitted without license from IHS

Licensee=North Carolina State Univ/5618801100
Not for Resale, 12/07/2014 23:07:36 MST

Full document details: UL 62275 (ND) 2010

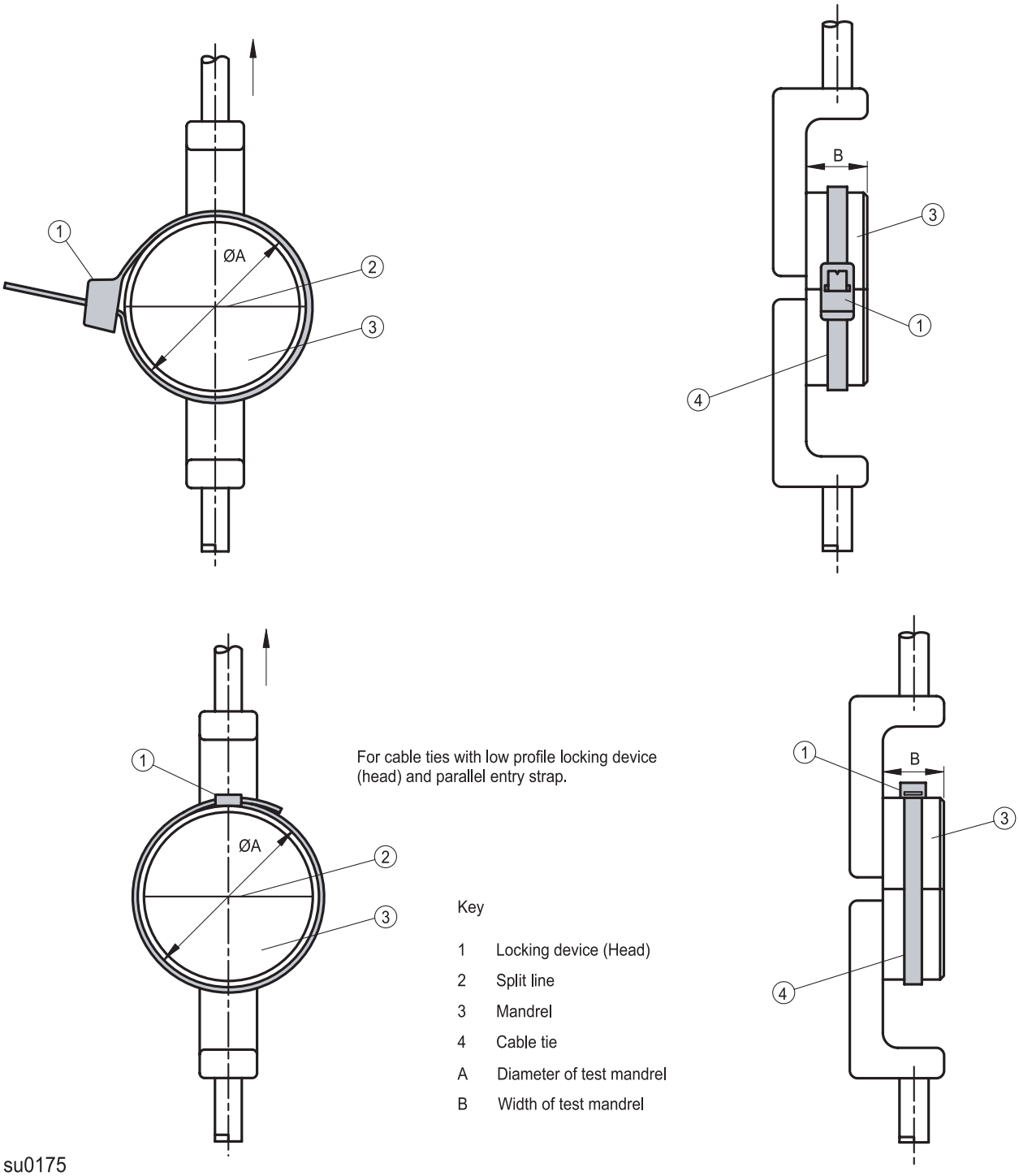


For cable ties with low profile locking device (head) and parallel entry strap.

Key

| | |
|---|---|
| 1 | Locking device (Head) |
| 2 | Split line |
| 3 | Mandrel |
| 4 | Cable tie |
| A | Diameter of test mandrel |
| B | Width of test mandrel |

su0175

UL COPYRIGHTED MATERIAL –
NOT AUTHORIZED FOR FURTHER REPRODUCTION OR
DISTRIBUTION WITHOUT PERMISSION FROM UL

Documents
Document Sharing Hub

Provided by IHS under license with UL

No reproduction or networking permitted without license from IHS
Full document details: UL 62275 (ND) 2010

Licensee=North Carolina State Univ/5618801100
Not for Resale, 12/07/2014 23:07:36 MST

**6.2.1DV D1** ***Add the following to 6.2.1:***

**Type 11 – In Canada and the United States, the Type 11 classification refers to Type 1 according to 6.2.1 with additional pre-qualification to long-term performance characteristics of nonmetallic moulding materials according to CAN/CSA-C22.2 No. 0.17 or UL 746B. In Mexico, this classification does not apply.**

**6.2.2DV D1** ***Add the following to 6.2.2:***

**NOTE Cable ties classified according to 6.1.1 are considered only as Type 2.**

**6.2.2DV.1 Type 21 – In Canada and the United States, the Type 21 classification refers to Type 2 according to 6.2.2 with additional pre-qualification to long-term performance characteristics of nonmetallic moulding materials according to CAN/CSA-C22.2 No. 0.17 or UL 746B. In Mexico, this classification does not apply.**

**6.3.1DV D1** ***Add the following to 6.3.1:***

**6.3.1DV.1 Use of these ratings is recommended. Additional ratings between 50 °C and 150 °C in 5-degree increments are also acceptable.**

**6.3.1DV.2 Metallic cable ties constructed of aluminum shall be classified as 150 °C and metallic cable ties constructed of steel shall be classified as 300 °C.**

**6.3.3DV D2** ***Add the following to 6.3.3:***

**6.3.3DV.1 This classification applies only when the temperature declared is lower than 0 °C.**

**6.4.1DV D1** ***Delete 6.4.1:***

**Clause 6.4.1 is not applicable.**

**6.5.2.1DV D1** ***Delete 6.5.2.1:***

**Subclause 6.5.2.1 is not applicable.**

**6.6DV D1** ***Add subclause 6.6DV – According to smoke and heat generation:***

**6.6DV.1 Not declared**

**6.6DV.2 AH-1: Suitable for use in air-handling spaces – 1 (plenums)**

**For cable ties and fixing devices according to 6.1.1**

**In Mexico, the classification AH-1 does not apply.**

**6.6DV.3 AH-2: Suitable for use in air-handling spaces – 2 (plenums)**

**For cable ties and fixing devices according to 6.1.2 and 6.1.3**

**In Mexico, the classification AH-2 does not apply.**

UL COPYRIGHTED MATERIAL –
NOT AUTHORIZED FOR FURTHER REPRODUCTION OR
DISTRIBUTION WITHOUT PERMISSION FROM UL

Documents
Document Sharing Hub

Provided by IHS under license with UL

No reproduction or networking permitted without license from IHS

Licensee=North Carolina State Univ/5618801100
Not for Resale, 12/07/2014 23:07:36 MST

Full document details: UL 62275 (ND) 2010

**7.1DV D1** ***Add the following to 7.1:***

**7.1DV.1 Markings shall be placed on the product, the smallest unit package in which the product is shipped, or installation instructions provided with the product.**

**7.1DV.2 The following markings shall be provided on labels, packaging, or installation instructions shipped with the product:**

| Fixing devices | Cable ties only |
|---|---|
| Max operating temp for application according to Table 3 | Max operating temp for application according to Table 3 |
| Min operating temp for application according to Table 4 | Min operating temp for application according to Table 4 |
| Type designation | Min installation temp if lower than 0°C |
| Mechanical strength as declared by the manufacturer | Minimum and maximum bundle diameter |
| | Loop tensile strength according to Table 2 |
| | Type designation |

**7.1DV.3 In Canada and the United States, a fixing device that relies upon an adhesive for securement shall be marked to include the following:**

**a) substrates accepted by investigation according to Annex DVA, Adhesives; and**

**b) manufacturer's recommendations for surface preparations, adhesive application temperature range, application pressure and duration, and curing time prior to loading.**

**In Mexico, this requirement does not apply.**

**7.3DV D1** ***Add the following to 7.3(a):***

**7.3DV.1 In addition to the requirements in 7.3(a), the marking indicating the classification "Resistant to ultraviolet light" in accordance with 6.5.1.2 may be marked "For use outdoors" or "For use outdoors or indoors" or with an equivalent wording.**

**7.3DV.2 In Canada and the United States, the manufacturer's declared minimum loop tensile strength according to Table 2 may be supplemented with equivalent values expressed in pounds-force (lb-f) or kilograms-force (kg-f). In Mexico, this does not apply.**

**7.3DV.3 In Canada and the United States, a cable tie or fixing device classified as Type 2 according to 6.2.2 or Type 21 according to 6.2.2DV.1 and also classified according to 6.6DV.2 or 6.6DV.3 may be marked as follows:**

**a) For products classified as 6.1.1 and 6.6DV.2, "Suitable for use in air-handling spaces (plenums)" in accordance with Section 300.22 (B), (C), and (D) of the National Electrical Code, and Rules 12-010 (3), (4), and (5), and 12-020 of the Canadian Electrical Code, Part I, or an equivalent wording. Marking of the code "AH-1" meets the intent of this requirement.**

UL COPYRIGHTED MATERIAL –
NOT AUTHORIZED FOR FURTHER REPRODUCTION OR
DISTRIBUTION WITHOUT PERMISSION FROM UL

Documents
Document Sharing Hub

Provided by IHS under license with UL

No reproduction or networking permitted without license from IHS

Licensee=North Carolina State Univ/5618801100
Not for Resale, 12/07/2014 23:07:36 MST

Full document details: UL 62275 (ND) 2010

**b) For products classified as 6.1.2 or 6.1.3 and 6.6DV.3, "Suitable for use in air-handling spaces (plenums)" in accordance with Section 300.22 (C) and (D) of the National Electrical Code, and Rules 12-010 (3), (4), and (5), and 12-020 of the Canadian Electrical Code, Part I, or an equivalent wording. Marking of the code "AH-2" meets the intent of this requirement.**

**In Mexico, this does not apply.**

**7.4DV D1** ***Add the following:***

**A fixing device, the performance of which is dependent upon specific maximum and minimum mounting hole size, panel thickness, mounting orientation, or other assembly techniques, or special precautions for installation, shall be marked to include this information.**

**7.5DV D1** ***Add the following:***

**A cable tie classified Type 2, according to 6.2.2, or in Canada and the United States as Type 21 according to 6.2.2DV.1, and that complies with the requirements in 9.6.1DV, 11.1.5DV.6, and 11.2DV.1 where applicable, is permitted to be marked with the suffix "S" or "Support" in conjunction with the Type marking required in 7.3(a). In Mexico, Type 21 is not a recognized classification.**

**7.6DV D1** ***Add the following:***

**A fixing device that complies with the requirement in 9.7.1DV.4, 11.1.5DV.9, and 11.2DV.4, where applicable, is permitted to be marked "S" or "Support".**

**8DV D1** ***Add the following to Clause 8:***

**8DV.1 Flammability requirements for Type 11 cable ties and Type 21 cable ties and fixing devices**

**8DV.1.1 In Canada and the United States, nonmetallic materials shall have a minimum flammability classification of HB. Flammability classification of a pre-selected material shall be based on a nominal 1.5 mm thickness. For a metallic cable tie having a nonmetallic coating, the minimum and maximum coating thickness shall be tested after being applied to the minimum metal thickness of the device. In Mexico, Type 11 and Type 21 are not recognized classifications.**

**Compliance shall be checked by the test in IEC 60695-11-10.**

**8DV.1.2 Flame classifications determined in accordance with CAN/CSA-C22.2 No. 0.17 or UL 94 meet the intent of this requirement. In Mexico, Type 11 and Type 21 are not recognized classifications.**

UL COPYRIGHTED MATERIAL –
NOT AUTHORIZED FOR FURTHER REPRODUCTION OR
DISTRIBUTION WITHOUT PERMISSION FROM UL

Documents
Document Sharing Hub

Provided by IHS under license with UL

No reproduction or networking permitted without license from IHS

Licensee=North Carolina State Univ/5618801100
Not for Resale, 12/07/2014 23:07:36 MST

Full document details: UL 62275 (ND) 2010

**8DV.2 Relative thermal index ratings for Type 11 cable ties and Type 21 cable ties and fixing devices**

**8DV.2.1 In Canada and the United States, the maximum operating temperature of a nonmetallic or composite cable tie, as classified in 6.3.1, or as declared for a fixing device, shall be based on the relative thermal index (RTI – Strength) properties of the material used in the device. This declared temperature shall not exceed the relative thermal index of a 1.5 mm thick material from which the product is moulded. This requirement does not apply to polymeric coatings of a metallic cable tie that are not relied upon for loop tensile strength.**

**8DV.2.2 In Canada and the United States, the relative thermal index shall be determined as given in UL 746B or CAN/CSA-C22.2 No. 0.17. In Mexico, Type 11 and Type 21 are not recognized classifications.**

**NOTE The relative thermal index of a material is an indication of the material's ability to retain a particular property (such as physical or electrical) when exposed to an elevated temperature for an extended period of time. For each material, a number of relative thermal indices are established, each related to a specific property and specific thickness of the material.**

**8DV.3 Material requirements for Type 11 cable ties and Type 21 cable ties and fixing devices**

**8DV.3.1 In Canada and the United States, except as indicated in (a) and (b), polymeric materials used to mould or fabricate products covered by this Standard shall be made from materials that are 100 percent virgin and unmodified by the moulder:**

**a) Products made from thermoplastic materials are limited to 25 percent regrind by weight of the same material, unless the results of a separate investigation indicate acceptable performance for the material or the specific device. Annex DVD, Polymeric Material Modifications, includes guidelines to be considered in such a separate investigation.**

**b) Products covered by this Standard may employ colorants, flame retardants, fillers, mould-release lubricants, colour concentrates, dyestuff, chemical blowing agents, or reinforcements in conjunction with the polymeric material, when the additive or concentrate is tested and found not to adversely affect the critical properties of the material. An additive or concentrate of unknown performance shall not be used. Annex DVD, Polymeric Material Modifications, provides guidance for the use of specific additives that may be used in the moulding process without need for separate investigation.**

**8DV.3.2 In Canada and the United States, cable ties and fixing devices shall not employ materials that have been blended together unless one of the following conditions have been met:**

**a) When two materials have already been individually considered acceptable for an application, and are both found to be generically similar, are both produced by the same manufacturer, and are both classed HB according to 8DV.1.1, these materials may be dry blended in any proportion by the manufacturer without further testing.**

UL COPYRIGHTED MATERIAL –
NOT AUTHORIZED FOR FURTHER REPRODUCTION OR
DISTRIBUTION WITHOUT PERMISSION FROM UL

Documents
Document Sharing Hub

Provided by IHS under license with UL

No reproduction or networking permitted without license from IHS

Licensee=North Carolina State Univ/5618801100
Not for Resale, 12/07/2014 23:07:36 MST

Full document details: UL 62275 (ND) 2010

**b) When two materials have already been individually considered acceptable for an application and are both found to be generically similar, are both produced by the same manufacturer, each is classed V-0, or V-1, or V-2 when tested in accordance with 8DV.1, and the results of a separate investigation indicate performance meeting the requirements for the material or the specific device, these materials may be dry blended in any proportion by the manufacturer without further testing. Annex DVD, Polymeric Material Modifications, includes guidelines for a separate investigation.**

**A product made from blended material described in (a) or (b) shall be considered to have flammability, mechanical, and thermal properties that are no better than the performance of the weaker of the individual constituents on a property-to-property basis. In Mexico, Type 11 and Type 21 are not recognized classifications.**

**8DV.4 Material substitution for Type 11 cable ties and Type 21 cable ties and fixing devices**

**8DV.4.1 In Canada and the United States, another polymeric material shall be allowed to be substituted in cable ties and fixing devices having met the requirements of this Standard only when the material meets the conditions in Annex DVC, Substitution of Materials, and compliance is determined through appropriate investigation. In Mexico, Type 11 and Type 21 are not recognized classifications.**

**8DV.5 Material identification for Type 1 cable ties and Type 2 cable ties and fixing devices**

**8DV.5.1 In Canada and the United States, polymeric materials in cable ties classified Type 1 according to 6.2.1, and cable ties and fixing devices classified as Type 2 according to 6.2.2, shall be identified according to the tests in Annex DVE. Another polymeric material shall be allowed to be substituted, and is considered of the same material type according to 5.1, when determined to have a similar profile.**

**Compliance is checked by the Tests for Polymer Identification in Annex DVE. In the United States, compliance with these tests in UL 746A meets the intent of this requirement. In Canada, compliance with these tests in CAN/CSA-C22.2 No. 0.17 meets the intent of this requirement.**

**In Mexico, this requirement does not apply.**

**9.1DV D1 *Replace 9.1 in its entirety with the following:***

**9.1DV.1 The cable tie and/or its associated fixing device shall withstand the stresses likely to occur during installation and application. The cable tie shall:**

**a) be capable of fixing the maximum and minimum bundle diameter declared by the manufacturer.**

***Compliance shall be checked by the test specified in 9.2.***

**b) be able to be installed at the minimum temperature declared by the manufacturer.**

***Compliance shall be checked by the test specified in 9.3, for cable ties classified according to 6.1.2 and 6.1.3 only.***

UL COPYRIGHTED MATERIAL –
NOT AUTHORIZED FOR FURTHER REPRODUCTION OR
DISTRIBUTION WITHOUT PERMISSION FROM UL

Documents
Document Sharing Hub

Provided by IHS under license with UL

No reproduction or networking permitted without license from IHS
Full document details: UL 62275 (ND) 2010

Licensee=North Carolina State Univ/5618801100
Not for Resale, 12/07/2014 23:07:36 MST