Subject 713002

May 21, 2018

SUMMARY OF TOPICS

The following changes in requirements to the Standard for CSDS UAT Testing, UL 713002, are being proposed:

1. Addition of the requirement that polymeric enclosures for hair clippers and shaving appliances shall comply with the Standard for Polymeric Materials - Use in Electrical Equipment Evaluations, UL 746C.

2. Revisions to provide clarification of appliance configurations and the corresponding cord lengths and types.

3. Addition of requirements reflecting present practice for wall-hung shavers and clippers.

4. Addition of requirements reflecting present practice for dual-voltage hair clippers and shaving appliances.

5. Addition of requirements reflecting present practice for direct plug-in appliances.

6. Additional requirements and revisions for wet shavers.

7. Addition of requirements reflecting present practice for hot-lather dispensers.

8. Addition of an optional switch impact test for double insulated appliances in lieu of disassembling the switch to expose accessible live parts.

9. Additional important safeguard requirements for wall-hung, dual-voltage, and direct plug-in appliances and for wet shavers and hot-lather dispensers.

10. Deletion of paragraph 1.7.

11. Revision of Table 13.1 and paragraph 13.2.3.3 to delete "natural" from the term "natural gray."

12. Revision of paragraph 42.2 to provide for the use of separate manuals for the Important Safeguards and the Operating and Use and Care Instructions.

STP BALLOTS AND ALL COMMENTS DUE: NOVEMBER 30, 2018

For your convenience in review, proposed additions to existing requirements are shown underlined and proposed deletions are shown ~~lined-out~~.

UL COPYRIGHTED MATERIAL –
NOT AUTHORIZED FOR FURTHER REPRODUCTION OR
DISTRIBUTION WITHOUT PERMISSION FROM UL

Documents
Document Sharing Hub

Copyright UL
Provided by IHS Markit under license with UL
No reproduction or networking permitted without license from IHS
Full document details: UL 713002 BULLETIN 2018

Licensee=/, User=,
Not for Resale,

1. POLYMERIC MATERIALS

RATIONALE

This proposal was first discussed at the October 21, 1993 Industry Advisory Conference (IAC) meeting, then proposed in the November 3, 1993 Meeting Report, the July 30, 1999 Subject 1028 bulletin, and again in the May 12, 2000 Meeting Report. Comments on the November 3, 1993 proposal suggested that the requirement should include an Exception to not require drop or impact testing on phenolics. Considering that the intent of the test is to evaluate the integrity of the enclosure material, and since it is just as likely for an appliance with a phenolic enclosure to be dropped as one employing any other polymeric material, UL proposed in the July 30,1999 bulletin to add paragraph 9.2A and not make an Exception for phenolic materials.

As a result of the comments received to the July 30, 1999 bulletin, UL further modified proposed paragraph 9.2A to clarify that with regards to the Standard for Polymeric Materials – Use in Electrical Equipment Evaluation, UL 746C, shavers and hair clippers provided with wall-hanging means are investigated as portable appliances.

The comments on the May 12, 2000 Meeting Report indicated support for the proposal. However, the proposals in the May 12, 2000 Meeting Report did not achieve consensus in total as required under UL's periodic maintenance method for maintaining ANSI approval. Therefore, UL is reproposing this change under the new continuous maintenance method for maintaining ANSI approval, in which each separate proposal is balloted for consensus.

PROPOSAL

(NEW)

9.2A A polymeric enclosure shall comply with the applicable requirements in the Standard for Polymeric Materials – Use in Electrical Equipment Evaluations, UL 746C. Shavers and hair clippers provided with wall-hanging means are to be investigated as portable appliances, with regards to the requirements in UL 746C.

2. POWER-SUPPLY CONNECTIONS

RATIONALE

In the November 30, 1993 Report on the October 21, 1993 IAC meeting, UL indicated that the requirements for power-supply cords on charger bases for residential and commercial applications would require review and that proposed requirements would be developed. As a result of the review, UL determined that a more extensive proposal was needed to provide clarification of the requirements for all cord types and lengths. Therefore, in the Subject 1028, July 30, 1999 proposal bulletin, UL proposed to add definitions with respect to cord connected products and to revise Figure 13.2, Table 13.2, and paragraphs 13.1.1.9 – 13.1.1.12.

In response to the July 30, 1999 proposal a variety of comments were received including requests that Table 13.2 be expanded further to also include additional cord types. These comments were discussed at the April 6–7, 2000 IAC Meeting, and consequently, UL is proposing to expand the list of acceptable cord types in Table 13.2.

As a result of the comments received to the May 12, 2000 Meeting Report, UL is proposing to further revise Table 13.2 to add cord Type SVT for household and commercial hair clipper appliances for configurations A (cord/cordless) and B.

UL COPYRIGHTED MATERIAL –
NOT AUTHORIZED FOR FURTHER REPRODUCTION OR
DISTRIBUTION WITHOUT PERMISSION FROM UL

Documents
Document Sharing Hub

Copyright UL
Provided by IHS Markit under license with UL
No reproduction or networking permitted without license from IHS
Licensee=/, User=,
Not for Resale,
Full document details: UL 713002 BULLETIN 2018

PROPOSALS

(NEW)

2.4 CHARGER BASE – A cord connected unit intended to directly support the appliance while charging and provides a limited-energy primary circuit or a low-voltage circuit.

(NEW)

2.5 CORDLESS APPLIANCE – A rechargeable appliance that is not intended to be used while charging since typically the charging circuit does not supply enough power to operate a discharged appliance.

(NEW)

2.6 CORD/CORDLESS APPLIANCE – A rechargeable appliance that is operable either while still charging (cord) or after charging (cordless).

(NEW)

2.7 CORDED-ONLY APPLIANCE – A non-rechargeable appliance that is operable only while connected to its power-supply cord. Constructions with the power-supply cord permanently attached and constructions with a detachable power-supply cord are included.

(NEW)

2.8 DIRECT PLUG-IN APPLIANCE – An appliance that employs a blade assembly on the enclosure for connection to the branch circuit.

(NEW)

2.9 DIRECT PLUG-IN CHARGER UNIT – A unit that employs a blade assembly on the enclosure for connection to the branch circuit. The charger unit is intended to directly support the appliance while charging or is cord-connected to the appliance. The charger unit provides a limited-energy primary circuit or a low-voltage circuit.

(NEW)

2.10 LIMITED-ENERGY PRIMARY CIRCUIT – A line-voltage circuit which incorporates a limiting impedance in series with the supply circuit so that:

a) The circuit potential on the load side of the limiting impedance does not exceed 30 volts rms (42.4 volts peak) under operating conditions; and

b) The maximum energy available at the load side of the limiting impedance circuit does not exceed 100 V-A under any condition of operation, including abnormal operation.

(NEW)

2.11 LINE-VOLTAGE CIRCUIT – A circuit having a potential of not more than 600 V and having circuit characteristics in excess of those of a low-voltage circuit or a limited-energy primary circuit.

(NEW)

UL COPYRIGHTED MATERIAL –
NOT AUTHORIZED FOR FURTHER REPRODUCTION OR
DISTRIBUTION WITHOUT PERMISSION FROM UL

Documents
Document Sharing Hub

Copyright UL
Provided by IHS Markit under license with UL
No reproduction or networking permitted without license from IHS
Licensee=/, User=,
Not for Resale,
Full document details: UL 713002 BULLETIN 2018

2.12 LOW-VOLTAGE CIRCUIT – A circuit supplied by a primary battery, by a Class 2 transformer, or by a combination of a transformer and fixed impedance which, as a unit, complies with all performance requirements for Class 2 transformers and does not have an open-circuit potential of more than 30 volts rms (42.4 volts peak).

UL COPYRIGHTED MATERIAL –
NOT AUTHORIZED FOR FURTHER REPRODUCTION OR
DISTRIBUTION WITHOUT PERMISSION FROM UL

Documents
Document Sharing Hub

Copyright UL
Provided by IHS Markit under license with UL
No reproduction or networking permitted without license from IHS
Licensee=/, User=,
Not for Resale,
Full document details: UL 713002 BULLETIN 2018

(NEW)
Figure 13.2
Appliance configurations

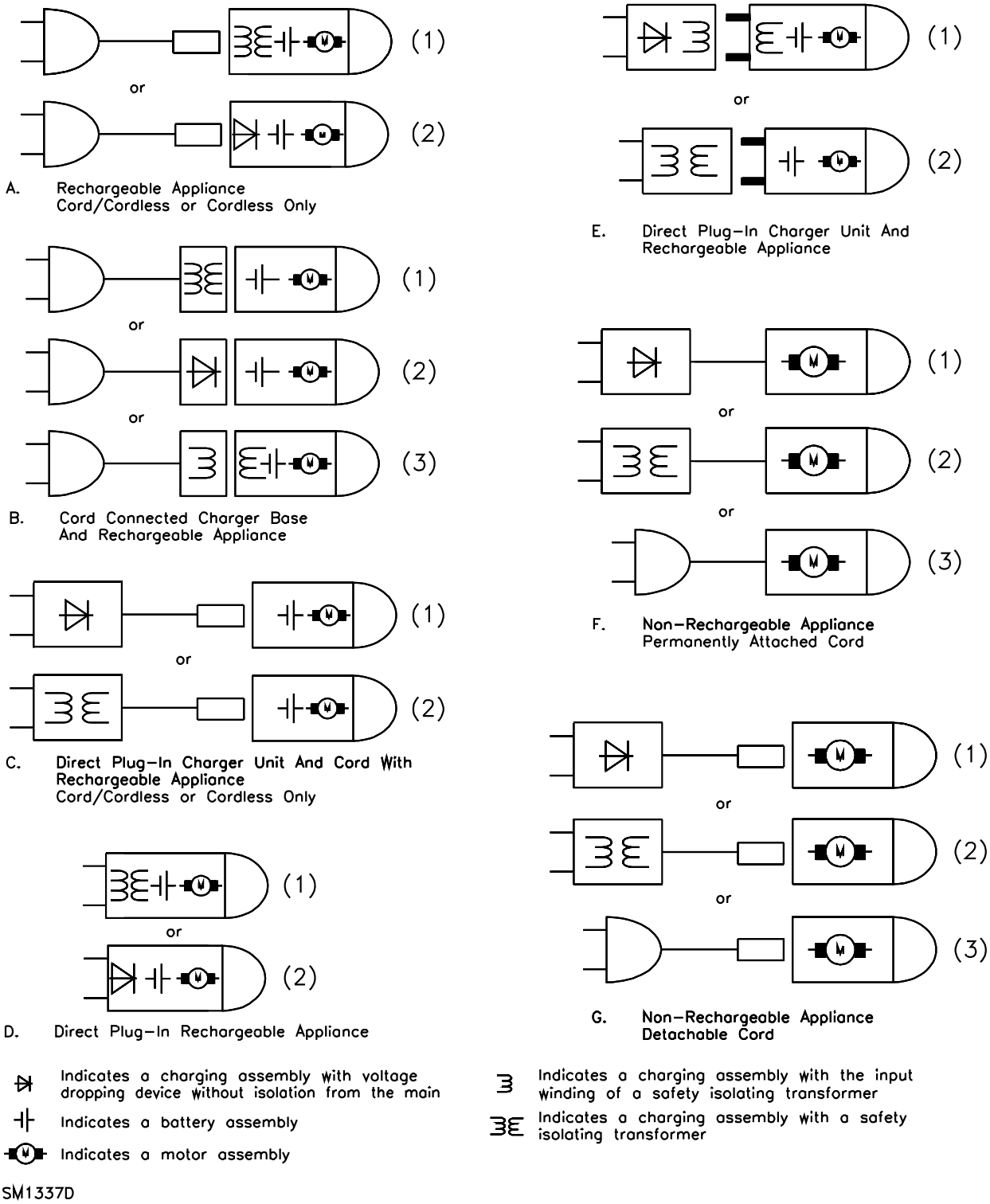

UL COPYRIGHTED MATERIAL –
NOT AUTHORIZED FOR FURTHER REPRODUCTION OR
DISTRIBUTION WITHOUT PERMISSION FROM UL

Documents
Document Sharing Hub

Copyright UL
Provided by IHS Markit under license with UL
No reproduction or networking permitted without license from IHS
Licensee=/, User=,
Not for Resale,
Full document details: UL 713002 BULLETIN 2018

13.1.1.9 The length of a ~~an attached~~ flexible cord for an appliance configuration shown in Figure 13.2 shall be as specified in Table 13.2. ~~including the attachment plug, and a cord set, including fittings, shall not be less than 6 feet (1.83 m).~~

~~Exception No. 1: A tinsel cord attached to a shaver or a tinsel cord set intended for use with a shaver may be not less than 5 feet (1.5 m) long, including fittings.~~

~~Exception No. 2:~~ Exception: A cord-connected appliance that is required to be equipped with a grounding conductor ~~may~~ shall not be ~~provided~~ supplied with ~~not~~ more than 18 in~~ches~~ (457 mm) of permanently attached flexible cord or with a motor-attachment plug ~~if~~ when:

a) The usage of the appliance is such that it is ~~necessary~~ required to connect it by means of an extension cord during normal operation, and the manufacturer makes an ~~acceptable~~ extension cord available for use with the appliance – see 40.2.2; or

b) The manufacturer furnishes a ~~an acceptable~~ detachable cord set, 6 ft ~~feet~~ (1.83 m) or more in length, with the appliance.

~~Exception No. 3: The cord attached to the charging unit of a detachable shaver shall not be less than 4 feet (1.23 m) long, including fittings~~

(CURRENT)

Table 13.2
Cords for appliances

~~Appliances~~		~~Types of cord~~
~~Animal clippers~~		
	~~50 watts or less~~	~~SV, SVE, SVO, SVOO, SVT, TS, TST~~
	~~Over 50 watts~~	~~SJ, SJE, SJT, SJO, SJOO~~
~~Hair clippers~~		
	~~Household~~	~~TPT[a]~~
	~~Commercial~~	~~TPT, TS, TST~~
~~Shavers~~		~~TPT[a]~~

[a] A household hair clipper or shaver may employ a Type SP-1, SPE-1, or SPT-1 cord having individual strands of No. 36 AWG.

(PROPOSED)

UL COPYRIGHTED MATERIAL –
NOT AUTHORIZED FOR FURTHER REPRODUCTION OR
DISTRIBUTION WITHOUT PERMISSION FROM UL

Documents
Document Sharing Hub

Copyright UL
Provided by IHS Markit under license with UL
No reproduction or networking permitted without license from IHS
Licensee=/, User=,
Not for Resale,
Full document details: UL 713002 BULLETIN 2018

Table 13.2
Cords for appliances

Application	Appliance configuration in Figure 13.2	Types of cord[e]	Minimum Length[a] ft	(m)
Animal clippers:				
50 W or less	A (cord/cordless), F (line voltage circuit), G (line voltage circuit)	SV, SVE, SVO, SVOO, SVT, TS[c], TST[c]	6	(1.83)
	A (cordless only), B	SJ, SJE, SJT, SJO, SJOO	6	(1.83)
Over 50 W	A, B, F (line voltage circuit), G (line voltage circuit)	SJ, SJE, SJT, SJO, SJOO	6	(1.83)
Hair clippers:				
Household	A (cord/cordless), F (line voltage circuit), G (line voltage circuit)	TPT[b,c], TS[c], TST[c], SVT[d]	6	(1.83)
	A (cordless only), B	SP-2, SPE-2, SPT-2, SVT	4	(1.23)
Commercial	A (cord/cordless), F (line voltage circuit), G (line voltage circuit)	TPT[b,c], TS[c], TST[c], SVT[d]	6	(1.83)
	A (cordless only), B	SJ, SJE, SJO, SJOO, SJT, SJTO, SJTOO, SP-2, SPE-2, SPT-2, SVT	4	(1.23)
Shavers:				
Household	A (cord/cordless), F (line voltage circuit), G (line voltage circuit)	TPT[b,c]	5	(1.50)
	A (cordless only), B	SP-2, SPE-2, SPT-2	4	(1.23)
Either Hair Clipper or Shaver:				
Any application	C (cord/cordless), F (low voltage, limited energy), G (low voltage, limited energy)	Any	6	(1.83)
	C (cordless only)	Any	4	(1.23)

[a] Minimum length includes the attachment plug, and for a cord set includes fittings.

[b] A Type SP-1, SPE-1, or SPT-1 cord having individual strands with a maximum diameter equivalent to No. 36 AWG is an alternative to Type TPT.

[c] See 13.1.1.12.

[d] Cord having individual strands with a maximum diameter equivalent to No. 36 AWG.

[e] Counter supported appliances weighing 1/2 lb or less are able to use SP-1, SPE-1, or SPT-1 cord having individual stands with a maximum diameter equivalent to No. 36 AWG. The weight of the appliance is to be determined without the power supply cord. Additionally, for a charge base unit, the weight of the appliance is determined without the clipper or shaver.

13.1.1.10 The flexible cord for an appliance configuration shown in Figure 13.2 shall be of a Type as specified in Table 13.2 ~~or 13.1.1.11 and 13.1.1.12,~~ or shall ~~be of a type of~~ have properties such that it is at least equally as serviceable for the application.

(DELETED)

UL COPYRIGHTED MATERIAL –
NOT AUTHORIZED FOR FURTHER REPRODUCTION OR
DISTRIBUTION WITHOUT PERMISSION FROM UL

Documents
Document Sharing Hub

Copyright UL
Provided by IHS Markit under license with UL
No reproduction or networking permitted without license from IHS
Full document details: UL 713002 BULLETIN 2018

Licensee=/, User=,
Not for Resale,

~~13.1.1.11 For an appliance not specified in Table 13.2, Types SJ, SJE, SJO, SJOO, SJT, SJTO, OR SJTOO cord is ordinarily required if the appliance is intended for commercial or industrial use, and Type SP-2, SPE-2 or SPT-2 is intended for household use.~~

13.1.1.12 Where ~~A~~ a tinsel cord is ~~may be~~ employed, ~~if all five of the~~ the appliance and cord shall comply with the following conditions ~~are met~~:

a) The cord shall not be longer than 8 ft ~~feet~~ (2.4 m);

b) The cord shall be attached to the appliance directly or by means of a plug other than a standard flatiron or appliance plug;

c) The appliance rating shall not be more than 50 W;

d) The nature of the appliance shall necessitate use of an extremely flexible cord; and

e) The cord is not used for equipment grounding.

(NEW)

40.19 With reference to Figure 13.2, appliance configurations B, C, and E shall be marked to indicate the charger base or unit the appliance is to be used with.

3. WALL-HUNG APPLIANCES

RATIONALE

UL proposed in the July 30, 1999 proposal bulletin to add Wall-Hung Appliances, Mounting Means Strength Test, Cycled Immersions Test, and Wall-Hung Appliance Installation Instructions, Sections 24A, 32B, 32C, and 42A respectively to provide the requirements in the Standard as presently applied.

As a result of the comments received to the bulletin, UL proposed in the May 12, 2000 Meeting Report to delete paragraph 24A.4 from the proposal because of the potential confusion between wall-hung and wall-mounted appliances. UL also proposed to revise paragraph 24A.5 that was proposed in the July 30, 1999 bulletin and delete paragraph 44A.3 in order to clarify the meaning of ″energized while stored in the wall unit as intended.″

The comments on the May 12, 2000 Meeting Report indicated support for the proposal. However, the proposals in the May 12, 2000 Meeting Report did not achieve consensus in total as required under UL's periodic maintenance method for maintaining ANSI approval. Therefore, UL is reproposing this change under the new continuous maintenance method for maintaining ANSI approval, in which each separate proposal is balloted for consensus.

As a result of the proposed revisions made to Exception 2 of 24D.3 in Topic 6, UL is proposing to modify paragraph 32C.1 accordingly.

PROPOSALS

(NEW)

UL COPYRIGHTED MATERIAL –
NOT AUTHORIZED FOR FURTHER REPRODUCTION OR
DISTRIBUTION WITHOUT PERMISSION FROM UL

Documents
Document Sharing Hub

Copyright UL
Provided by IHS Markit under license with UL
No reproduction or networking permitted without license from IHS
Licensee=/, User=,
Not for Resale,
Full document details: UL 713002 BULLETIN 2018

2.13 WALL-HUNG APPLIANCE – A cord-connected appliance that is supplied with keyhole slots, notches, hanger holes, or similar features for hanging on a wall. Included is an appliance consisting of two interconnected units where one is intended to hang on the wall and the other is intended to be supported by the hand during use. Reference is to be made to the user manual of the appliance in establishing the intended functions of the appliance.

(NEW SECTION)

24A Wall-Hung Appliances

24A.1 A wall-hung appliance shall be:

a) Supplied with the required hardware for hanging the appliance in accordance with the installation instructions, and

b) Constructed in such a manner that the hanging means (such as screws) are not accessible without removing the appliance from the wall unit.

24A.2 When determining compliance with 24A.1(b), a part of the enclosure or a barrier that can be removed without the use of tools to gain access to the hanging means is to be removed.

24A.3 A keyhole slot, notch, or hanger hole shall be located so that the supporting screws or similar fasteners do not damage electrical insulation or reduce spacings to current-carrying parts of the appliance.

24A.4 A hand-held unit shall engage the associated wall unit on the wall. Removal of the hand-held unit from the wall unit shall not require the use of a tool and shall require a positive and deliberate action by the user. An appliance other than a low-voltage rechargeable appliance shall be constructed so the appliance will not operate while stored in the wall unit as intended.

24A.5 A wall-hung appliance, other than a direct plug-in charger unit for a rechargeable appliance with an additional wall-hanging base, shall not employ a detachable power-supply cord. See Figure 13.2, Configuration C.

24A.6 As part of the investigation, a wall-hung appliance shall be trial-installed in accordance with the manufacturer's instructions. The installation shall be feasible and the instructions shall be detailed and correct.

24A.7 A wall-hung appliance shall comply with the Mounting Means Strength Test, Section 32B.

(NEW SECTION)

32B Mounting Means Strength Test

32B.1 As a result of the test described in 32B.2 on a wall-hung appliance, there shall not be damage to the supporting surface, to the hanging means, or to the appliance that results in a risk of electric shock, fire, or injury to persons.

UL COPYRIGHTED MATERIAL –
NOT AUTHORIZED FOR FURTHER REPRODUCTION OR
DISTRIBUTION WITHOUT PERMISSION FROM UL

Documents
Document Sharing Hub

Copyright UL
Provided by IHS Markit under license with UL
No reproduction or networking permitted without license from IHS
Full document details: UL 713002 BULLETIN 2018

Licensee=/, User=,
Not for Resale,

32B.2 The appliance is to be mounted in accordance with the manufacturer's installation instructions using fasteners and constructions (brackets, screws, and similar limitations specified by the manufacturer) as described. When the support surface is not specified, a support surface of 3/8-in (9.5-mm) thick drywall (plasterboard) on 2 by 4 studs on 16-in (406.4-mm) centers is to be used. Fasteners are to be applied as specified in the instructions or, when not specified, are to be positioned in the drywall between studs. An adjustable appliance is to be adjusted to the position that gives the maximum projection from the wall. A gradually increasing force is to be applied to act vertically through the center of gravity of the appliance in the extended position. The force is to be increased over a period of not less than 5 and not more than 10 s until a load of four times the weight of the appliance, and not less than 10 lb (44.5 N), is applied to the mounting system. The load is to be maintained for 1 min.

(NEW SECTION)

32C Cycled Immersions Test

32C.1 A wall-hung appliance not marked in accordance with 40.4 is to be tested as described in 32C.2 – 32C.4. As a result of the tests, the leakage current shall not exceed 5 mA and there shall not be dielectric breakdown.

32C.2 A sample of the appliance is to be connected to a supply source at the voltage specified in 30.6 and immersed in water for 1 h, to a point within 6 in (152 mm) of the attachment plug. The water is to be 300 ohm-centimeter resistivity water and be at a temperature of 25 ±5°C. The water is to be in a conductive metal container. The sample is to be in contact with the bottom of the container and be 12 in (305 mm) under the surface of the water. Any on-off switch is to be on during the test.

32C.3 The leakage current as measured through a 500-ohm noninductive resistor in parallel with a 0.45-µf capacitor connected between the metal container and the grounded conductor of the supply circuit is to be monitored during the entire immersion period. The leakage current is to be measured for each polarity of the supply circuit.

32C.4 Following each immersion, the sample is to be disconnected from the supply source, removed from the water, and dried at room temperature of 25 ±5°C for not less than 4 h and not more than 18 h. This procedure is to be repeated for 10 cycles. At the end of the 10th cycle, a 60-Hz potential of 1,000 V plus twice the rated voltage of the appliance is to be applied between live parts and the water for 1 min.

(NEW SECTION)

40.4 Wall-Hung Appliances

40.4.1 A wall unit or a hanging bracket for a wall-hung appliance shall be permanently marked where readily visible during installation in letters having a contrasting color to the background with the word ″DANGER″ and the following or the equivalent: ″To Reduce Risk of Death by Electric Shock, Do Not Install Where Wall Unit is Able to Fall Into a Tub or Sink.″ The height of the letters in the word ″DANGER″ shall not be less than 1/8 in (3.2 mm), and the height of the remaining letters shall not be less than 1/16 in (1.6 mm). The lettering shall be in sans serif letters.

Exception No. 1: The marking is not required to be in contrasting colors where the letters are embossed not less than 0.020 in (0.5 mm) or indented to a depth of not less that 0.020 in.

Exception No. 2: The marking is not required for a wall-hung appliance that complies with the Cycled Immersions Test, Section 32C.

UL COPYRIGHTED MATERIAL –
NOT AUTHORIZED FOR FURTHER REPRODUCTION OR
DISTRIBUTION WITHOUT PERMISSION FROM UL

Documents
Document Sharing Hub

Copyright UL
Provided by IHS Markit under license with UL
No reproduction or networking permitted without license from IHS
Licensee=/, User=,
Not for Resale,
Full document details: UL 713002 BULLETIN 2018

Exception No. 3: The marking is not required for a direct plug-in charger unit or a rechargeable appliance with an additional base. See Figure 13.2, configuration C.

41.1 An appliance shall be ~~provided~~ supplied with legible instructions pertaining to:

a) The risk of fire, electric shock, or injury to persons that is associated with the use of the appliance,

b) Operation,

c) User-maintenance and storage, and, as applicable,

d) Installation, and

~~d~~e) Grounding or double-insulation.

(NEW SECTION)

44A Wall-Hung Appliance Installation Instructions

44A.1 Installation instructions for hanging of the wall unit of a wall-hung appliance shall be packaged with a wall-hung appliance. The instructions shall include a list of the items supplied (such as screws, anchors, brackets, and similar hardware); the tools required; and the step-by-step instructions for preparation of the mounting surface, application of the hanging hardware, method of hanging the wall unit, and similar instructions.

44A.2 The installation instructions shall include the WARNING and DANGER statements specified in 42.5(c) and 42.6(a), preceding the detailed instructions specified in 44A.1.

4. DUAL-VOLTAGE APPLIANCES

RATIONALE

UL originally proposed to add Dual-Voltage Appliances, Section 24B, and Abnormal Operation Test, Section 32D (currently renumbered as 32F), in the July 30, 1999 Subject 1028 bulletin to provide the requirements in the Standard as presently applied. UL also proposed to revise paragraph 43.3 to provide for additional instructions regarding the voltage selector on the appliance. In the May 12, 2000 Meeting Report, UL clarified the definition of a dual-voltage appliance.

The comments on the May 12, 2000 Meeting Report indicated support for the proposal. However, the proposals in the May 12, 2000 Meeting Report did not achieve consensus in total as required under UL's periodic maintenance method for maintaining ANSI approval. Therefore, UL is reproposing this change under the new continuous maintenance method for maintaining ANSI approval, in which each separate proposal is balloted for consensus.

PROPOSALS

(NEW)

2.14 DUAL-VOLTAGE APPLIANCE – An appliance rated for use at two voltages, such as 120 or 240 V, and provided with a means to change from one voltage to the other.

(NEW SECTION)

UL COPYRIGHTED MATERIAL –
NOT AUTHORIZED FOR FURTHER REPRODUCTION OR
DISTRIBUTION WITHOUT PERMISSION FROM UL

Documents
Document Sharing Hub

Copyright UL
Provided by IHS Markit under license with UL
No reproduction or networking permitted without license from IHS
Licensee=/, User=,
Not for Resale,
Full document details: UL 713002 BULLETIN 2018