UL 73

STANDARD FOR SAFETY

Motor-Operated Appliances

Documents
Document Sharing Hub

Full document details: UL 73 2022

Documents
Document Sharing Hub

Full document details: UL 73 2022

UL Standard for Safety for Motor-Operated Appliances, UL 73

Tenth Edition, Dated March 2, 2011

Summary of Topics

This revision of ANSI/UL 73 dated December 14, 2022 includes clarification on the temperature limit of the capacitor; Table 46.1.

Text that has been changed in any manner or impacted by UL's electronic publishing system is marked with a vertical line in the margin.

The revised requirements are substantially in accordance with Proposal(s) on this subject dated November 11, 2022.

All rights reserved. No part of this publication may be reproduced, stored in a retrieval system, or transmitted in any form by any means, electronic, mechanical photocopying, recording, or otherwise without prior permission of UL.

UL provides this Standard "as is" without warranty of any kind, either expressed or implied, including but not limited to, the implied warranties of merchantability or fitness for any purpose.

In no event will UL be liable for any special, incidental, consequential, indirect or similar damages, including loss of profits, lost savings, loss of data, or any other damages arising out of the use of or the inability to use this Standard, even if UL or an authorized UL representative has been advised of the possibility of such damage. In no event shall UL's liability for any damage ever exceed the price paid for this Standard, regardless of the form of the claim.

Users of the electronic versions of UL's Standards for Safety agree to defend, indemnify, and hold UL harmless from and against any loss, expense, liability, damage, claim, or judgment (including reasonable attorney's fees) resulting from any error or deviation introduced while purchaser is storing an electronic Standard on the purchaser's computer system.

Documents
Document Sharing Hub

Full document details: UL 73 2022

No Text on This Page

Documents
Document Sharing Hub

Full document details: UL 73 2022

MARCH 2, 2011
(Title Page Reprinted: December 14, 2022)

ANSI/UL 73-2022

UL 73

Standard for Motor-Operated Appliances

First Edition – April, 1937
Second Edition – April, 1958
Third Edition – December, 1960
Fourth Edition – February, 1967
Fifth Edition – January, 1972
Sixth Edition – August, 1978
Seventh Edition – September, 1986
Eighth Edition – April, 1993
Ninth Edition – December, 2004

Tenth Edition

March 2, 2011

This ANSI/UL Standard for Safety consists of the Tenth Edition including revisions through December 14, 2022.

The most recent designation of ANSI/UL 73 as an American National Standard (ANSI) occurred on December 14, 2022. ANSI approval for a standard does not include the Cover Page, Transmittal Pages, and Title Page.

The Department of Defense (DoD) has adopted UL 73 on May 11, 1976. The publication of revised pages or a new edition of this Standard will not invalidate the DoD adoption.

Comments or proposals for revisions on any part of the Standard may be submitted to UL at any time. Proposals should be submitted via a Proposal Request in UL's On-Line Collaborative Standards Development System (CSDS) at https://csds.ul.com.

UL's Standards for Safety are copyrighted by UL. Neither a printed nor electronic copy of a Standard should be altered in any way. All of UL's Standards and all copyrights, ownerships, and rights regarding those Standards shall remain the sole and exclusive property of UL.

COPYRIGHT © 2022 UNDERWRITERS LABORATORIES INC.

Documents
Document Sharing Hub

Full document details: UL 73 2022

No Text on This Page

Documents
Document Sharing Hub

Full document details: UL 73 2022

CONTENTS

INTRODUCTION

1 Scope 9
2 Glossary 9
3 Units of Measurement 11
4 References 11

CONSTRUCTION

5 General 11
6 Components 12
6.1 General 12
6.2 Attachment plugs, receptacles, connectors, and terminals 13
6.3 Batteries and battery chargers 14
6.4 Boxes and raceways 15
6.5 Capacitors and filters 15
6.6 Controls 15
6.7 Cords, cables, and internal wiring 18
6.8 Cord reels 19
6.9 Film-coated wire (magnet wire) 19
6.10 Gaskets and seals 19
6.11 Ground-fault, arc-fault, and leakage current detectors/interrupters 19
6.12 Heaters and heating elements 20
6.13 Insulation systems 20
6.14 Light sources and associated components 20
6.15 Marking and labeling systems 21
6.16 Motors and motor overload protection 21
6.17 Overcurrent protection 23
6.18 Polymeric materials and enclosures 24
6.19 Power supplies 24
6.20 Printed wiring boards 24
6.21 Semiconductors and small electronic components 25
6.22 Supplemental insulation, insulating bushings, and assembly aids 25
6.23 Switches 26
6.24 Transformers 27
6.25 Valves (electrically operated) and solenoids 27
6.26 Video and audio components 27
7 Frame and Enclosure 28
8 Adhesives Used to Secure Parts 31
9 Mechanical Assembly 32
10 Protection Against Corrosion 33
11 Accessibility of Uninsulated Live Parts and Film-Coated Wire 33
12 Supply Connections 39
12.1 General 39
12.2 Cord-connected appliances 39
12.3 Permanently connected appliances 45
13 Current-Carrying Parts 46
14 Electrical Insulation 47
15 Internal Wiring 47
15.1 Mechanical protection 47
15.2 Splices and connections 48
16 Tabs Used in Electrical Quick-Connect Terminals 49
16.1 General 49

AVA Documents
Document Sharing Hub
Full document details: UL 73 2022

16.2 Material requirements 49
16.3 Dimensional requirements 49
17 Separation of Circuits 55
18 Capacitors 55
19 Grounding 56
19.1 General 56
19.2 Grounding identification 57
20 Heating Elements 57
21 Lampholders 58
21A Lamps that Emit Ultraviolet (UV) Radiation 58
22 Motors 58
22.1 Construction 58
22.2 Brush wear out 58
22.3 Overload protection 59
22.4 Insulation systems 60
23 Overload- or Thermal-Protective Devices 61
24 Arc-Fault, and Leakage Current Detectors / Interrupters 62
25 Receptacles 62
26 Switches and Controls 63
27 Controls – End Product Test Parameters 64
27.1 General 64
27.2 Auxiliary controls 64
27.3 Operating controls (regulating controls) 64
27.4 Protective controls (limiting controls) 66
27.5 Controls using a temperature sensing device 67
28 Spacings 67
29 Spacings On Printed Wiring Boards 69
30 Components Used in Automatic Solar Cleaning Systems 69
31 Flooding of Live Parts 71

PROTECTION AGAINST INJURY TO PERSONS

32 General 71
33 Sharp Edges 72
34 Enclosures and Guards 72
35 Materials 73
36 Rotating or Moving Members 73
37 Parts Subject to Pressure 74
38 Pressure-Relief Devices 75
39 Switches, Controls, and Interlocks 76
40 Specific Appliances 77
40.1 Self-propelled appliance 77
40.2 Recessed ultrasonic cleaner 77
41 Stability 78
41A Protection from Overexposure to Ultraviolet (UV) Radiation 78

PERFORMANCE

42 Leakage Current Test 79
43 Leakage Current Test Following Humidity Conditioning 81
44 Starting Current Test 81
45 Input Test 81
46 Temperature Tests 82
46.1 General 82
46.2 Maximum normal load 85

AVA Documents
Document Sharing Hub
Full document details: UL 73 2022

47 Surface Temperature Tests 85
47.1 Exterior surfaces 85
47.2 Contact surfaces 86
48 Dielectric Voltage-Withstand Test 86
49 Continuous Operation Test 87
50 Resistance-to-Moisture Test 87
50.1 Water spray test 87
50.2 Flooding of live parts 91
50.3 Automatic solar panel cleaning systems – flooding overflow test 91
50.4 Flooding overflow test for recessed ultrasonic cleaners 91
50.5 Flooding immersion test for recessed ultrasonic cleaners 92
51 Tests on Switches and Controls 92
52 Puncture Test for Recessed Ultrasonic Cleaners 93
53 Strain-Relief Test 93
54 Abnormal Operation Test 94
54.1 General 94
54.2 Electronic components 94
55 Abnormal Operation Tests for Recessed Ultrasonic Cleaners 95
55.1 General 95
55.2 Electronic components 95
55.3 Dry operation test 95
55A Rechargeable and Automatic Flashlights and Lanterns 95
56 Radiation Test 96
57 Ozone Test 96
58 Operational Test 97
59 Permanence of Marking Test 97
60 Permanence of Cord Tag Test 97
60.1 General 97
61 Solenoids 98
62 General Purpose Transformers 99
62.1 General 99
62.2 Voltage measurement test 99
62.3 Overload test 99
62.4 Repeated dielectric voltage-withstand test 100
63 Thermoplastic Motor Insulation Systems 100
63.1 General 100
63.2 Abnormal conditioning 100
63.3 Overload-burnout conditioning 100
63.4 Thermal aging 101
64 Electrically Operated Valves (Class 2) for Use in Automatic Solar Panel Cleaning Systems 103
64.1 Torque test 103
64.2 Hydrostatic strength test 103
64.3 Burnout test 104
65 Interlock System Endurance Test – Recessed Ultrasonic Cleaners 104
66 Polymeric Enclosure Mechanical Resistance – Recessed Ultrasonic Cleaners 104
66.1 Crushing resistance test 104
66.2 Resistance to impact test 104
66A Ultraviolet Irradiance Test 105

MANUFACTURING AND PRODUCTION TESTS

67 Dielectric Voltage-Withstand Test 106
68 Grounding Continuity Test 107

Documents
Document Sharing Hub
Full document details: UL 73 2022

RATING

69 Details 108

MARKING

70 Details 108
70.1 General 108
70.2 Permanently connected appliances 111
70.3 Cord-connected appliances 112
70.4 Carbonators 112
70.5 Insect-exterminating appliances 112
70.6 Outdoor use insect and rodent control equipment 113
70.7 Components 113
70.8 Outdoor-use appliance 113
70.9 Double-insulated appliances 113
70.10 Rechargeable and automatic flashlights and lanterns 113
70.11 Markings for insect and rodent-control equipment which emit ultraviolet (UV) radiation 113

INSTRUCTION MANUAL

71 General 114
72 Instructions pertaining to risk of fire, electric shock, or injury to persons 115
73 Installation instructions 117
74 Operating instructions 120
74.5 Rechargeable and automatic flashlights and lanterns 120
75 User-Maintenance Instructions 121
75A Instructions for Insect and Rodent-Control Equipment Generating Ultraviolet Radiation 121

PROTECTION FROM CONTAMINATION

76 Scope 121
77 Construction 121
78 Performance 122
79 Marking 122

DIRECT PLUG-IN INSECT AND RODENT CONTROL APPLIANCES

80 General 122
81 Construction 122
82 Performance 128
83 Markings 128

SUPPLEMENT SA – UL 60335-1 BASED REQUIREMENTS FOR THE EVALUATION OF ELECTRONIC CIRCUITS

INTRODUCTION

SA1 Scope 129
SA2 General 129
SA3 Glossary 129

Documents
Document Sharing Hub
Full document details: UL 73 2022

CONSTRUCTION

SA4 Components 130
SA4.1 Capacitors 130
SA4.2 Isolation devices 130
SA4.3 Printed wiring boards 130
SA4.4 Switch mode power supplies 130
SA5 Identification of Safety Critical Circuit Functions 131
SA5.1 General 131
SA5.2 Protective electronic circuits 131
SA6 Evaluation of the Different Types of Electronic Circuits 131
SA6.1 All types of circuits 131
SA7 Circuits that provide Safety Critical Functions 132

PERFORMANCE

SA8 General Conditions for the Tests 132
SA8.1 Details 132
SA8.2 Intentionally weak parts 133
SA8.3 Test results determined by overcurrent protection operation 133
SA9 Low-Power Circuits 133
SA9.1 Low-power circuit determination 133
SA10 Abnormal Operation, Fault, Low-power, and Switch mode tests 134
SA10.1 Abnormal operation and fault tests 134
SA10.2 Low-power circuit fire tests 136
SA10.3 Switch mode power supply overload test 136
SA11 Programmable Component Reduced Supply Voltage Test 136
SA12 Electromagnetic Compatibility (EMC) Requirements – Immunity 137

MANUFACTURING AND PRODUCTION LINE TESTING

SA13 General 138

Documents
Document Sharing Hub

Full document details: UL 73 2022

No Text on This Page

Documents
Document Sharing Hub

Full document details: UL 73 2022

INTRODUCTION

1 Scope

1.1 These requirements cover motor-operated appliances to be employed in accordance with the National Electrical Code, NFPA 70.

1.2 These requirements also cover small utilization appliances, such as vibrators in which motion of an operating part is produced by electrical means.

1.3 These requirements do not cover appliances rated more than 600 V; nor do they cover appliances involving universal motors rated more than 250 V.

1.4 These requirements do not cover equipment intended particularly for the control of electric motors; separator motors; nor electric clocks, fans, clothes dryers, washing machines, hair dryers, tools, waste disposers, dishwashers, office appliances and business equipment, refrigerators, air conditioners, vending and amusement machines, hair clippers and shavers, snow movers, automotive and garage equipment, or other motor-operated appliances that are covered by individual requirements.

1.5 An appliance that utilizes some other source of energy, such as gas or steam, in addition to electric energy will be investigated under these requirements and under such additional requirements as are applicable to the appliance under consideration.

1.6 Manually operated die-cutting machines without electrical parts need only comply with the following applicable requirements. Industrial machines of this type are not addressed by these requirements.

a) Protection Against Injury to Persons – Sections 32 – 36 and 41;

b) Performance – Section 58;

c) Markings – 70.1 (excluding electrical rating); and

d) Instruction Manual – Section 71.

1.7 *Deleted*

2 Glossary

2.1 For the purpose of this standard the following definitions apply.

2.2 APPLIANCE COUPLER – A single-outlet, female contact device for attachment to a flexible cord as part of a detachable power-supply cord to be connected to an appliance inlet (motor attachment plug).

2.3 APPLIANCE INLET (MOTOR ATTACHMENT PLUG) – A male contact device mounted on an end product appliance to provide an integral blade configuration for the connection of an appliance coupler or cord connector.

2.4 APPLIANCE (FLATIRON) PLUG – An appliance coupler type of device having a cord guard and a slot configuration specified for use with heating or cooking appliances.

2.5 AUTOMATIC SOLAR PANEL CLEANING SYSTEM – a household or commercial, outdoor use cleaning system primarily comprised of an irrigation controller, motor-operated water pump, electrically operated zone valves, and water nozzles. The system is intended to be hose-connected to a water supply rated less than 100 psig, and the water nozzles and associated zone valves are intended for rooftop or

AVA Documents
Document Sharing Hub
Full document details: UL 73 2022

ground installation near the solar panels. No other electrical equipment of the system is intended for roof mounting.

2.6 AUTOMATICALLY CONTROLLED APPLIANCE – An appliance is considered to be automatically controlled if:

a) The repeated starting of the appliance, beyond one complete predetermined cycle of operation to the point where some form of limit switch opens the circuit, is independent of any manual control;

b) During any single predetermined cycle of operation, the motor is caused to stop and restart one or more times;

c) Upon energizing the appliance, the initial starting of the motor may be intentionally delayed beyond normal, conventional starting; or

d) During any single predetermined cycle of operation, automatic changing of the mechanical load may reduce the motor speed sufficiently to reestablish starting-winding connections to the supply circuit.

2.7 COMPONENT – A device or fabricated part of the appliance covered by the scope of a safety standard dedicated to the purpose. When incorporated in an appliance, equipment otherwise typically field installed (e.g. luminaire) is considered to be a component. Unless otherwise specified, materials that compose a device or fabricated part, such as thermoplastic or copper, are not considered components.

2.8 COUNTER-SUPPORTED APPLIANCE – An appliance that is physically supported by a counter, table or bench during the performance of its intended function.

2.9 CORD CONNECTOR – A female contact device wired on flexible cord for use as an extension from an outlet to make a detachable electrical connection to an attachment plug or, as an appliance coupler, to an equipment inlet.

2.10 CONTROL, AUTOMATIC ACTION – A control in which at least one aspect is non-manual.

2.11 CONTROL, AUXILIARY – A device or assembly of devices that provides a functional utility, is not relied upon as an operational or protective control, and therefore is not relied upon for safety. For example, an efficiency control not relied upon to reduce the risk of electric shock, fire, or injury to persons during normal or abnormal operation of the end product is considered an auxiliary control.

2.12 CONTROL, MANUAL – A device that requires direct human interaction to activate or rest the control.

2.13 CONTROL, OPERATING – A device or assembly of devices, the operation of which starts or regulates the end product during normal operation. For example, a thermostat, the failure of which a thermal cutout/limiter or another layer of protection would reduce the risk of electric shock, fire, or injury to persons, is considered an operating control.

2.14 CONTROL, PROTECTIVE – A device or assembly of devices, the operation of which is intended to reduce the risk of electric shock, fire or injury to persons during normal and reasonably anticipated abnormal operation of the appliance. For example, a thermal cutout/limiter, or any other control/circuit relied upon for normal and abnormal conditions, is considered a protective control. (During the testing of the protective control/circuit, the protective functions are verified under normal and single-fault conditions of the control.)

Documents
Document Sharing Hub

Full document details: UL 73 2022

2.15 CONTROL, TYPE 1 ACTION – The actuation of an automatic control for which the manufacturing deviation and the drift (tolerance before and after certain conditions) of its operating value, operating time, or operating sequence has not been declared and tested under this standard.

2.16 CONTROL, TYPE 2 ACTION – The actuation of an automatic control for which the manufacturing deviation and the drift (tolerance before and after certain conditions) of its operating value, operating time, or operating sequence have been declared and tested under this standard.

2.17 FIXED APPLIANCE – Any equipment or appliance that is provided with a facitily to be fastened or otherwise secured in a specific location.

2.18 LINE-VOLTAGE CIRCUIT – A circuit involving a potential of not more than 600 V and having circuit characteristics in excess of those of a low-voltage circuit.

2.19 LOW-VOLTAGE CIRCUIT – A circuit involving a peak open-circuit potential of not more than 42.4 V supplied by a primary battery, by a Class 2 transformer, or by a combination of a transformer and a fixed impedance that as a unit, complies with all performance requirements for a Class 2 transformer. A circuit derived from a line-voltage circuit by connecting a resistance in series with the supply circuit as a means of limiting the voltage and current, is not considered to be a low voltage circuit.

2.20 PORTABLE APPLIANCE – An appliance that is easily carried or moved from one place to another in normal use.

2.21 RECESSED ULTRASONIC CLEANER– An ultrasonic cleaner that is intended to be installed with the top portion of the appliance above a countertop, and with the bottom and all sides of the enclosure located beneath the countertop. The appliance controls (such as on/off switches) and top cover (safety door) are located above the countertop.

2.22 REMOTELY CONTROLLED APPLIANCE – An appliance that is out of sight of the operator who is at the starting device.

2.23 STATIONARY APPLIANCE – An appliance that is not easily moved from one place to another in normal use or is located in a dedicated space, but is not fastened in place.

3 Units of Measurement

3.1 If a value for measurement is followed by a value in other units in parentheses, the second value may be only approximate. The first stated value is the requirement.

4 References

4.1 Any undated reference to a code or standard appearing in the requirements of this standard shall be interpreted as referring to the latest edition of that code or standard.

CONSTRUCTION

5 General

5.1 An appliance shall employ materials that are acceptable for the application.

Documents
Document Sharing Hub

Full document details: UL 73 2022

6 Components

6.1 General

6.1.1 A component of a product covered by this standard shall:

a) Comply with the requirements for that component as indicated in 6.2 – 6.26;

b) Be used in accordance with its rating(s) established for the intended conditions of use;

c) Be used within its established use limitations or conditions of acceptability;

d) Additionally comply with the applicable requirements of this end product standard; and

e) Not contain mercury, unless used within a fluorescent, high intensity discharge, or neon lamp bulb.

Exception No. 1: A component of a product covered by this standard is not required to comply with a specific component requirement that:

a) Involves a feature or characteristic not required in the application of the component in the product,

b) Is superseded by a requirement in this end product standard, or

c) Is separately investigated when forming part of another component, provided the component is used within its established ratings and limitations.

Exception No. 2: A component that complies with a UL component standard other than those specified in 6.2 – 6.26 is acceptable if the:

a) Component also complies with the applicable component standard of 6.2 – 6.26; or

b) UL component standard:

1) Is compatible with the ampacity and overcurrent protection requirements in the National Electrical Code, NFPA 70, where applicable;

2) Considers long-term thermal properties of polymeric insulating materials in accordance with the Standard for Polymeric Materials – Long Term Property Evaluations, UL 746B , and

3) Any use limitations of the other component standard are identified and appropriately accommodated in the end use application. For example, a component used in a household application, but intended for industrial use and complying with the relevant component standard may assume user expertise not common in household applications.

6.1.2 A component that is also intended to perform other functions, such as over current protection, ground-fault circuit-interruption, surge suppression, any other similar functions, or any combination thereof, shall comply additionally with the requirements of the applicable UL standard(s) that cover devices that provide those functions.

Exception: Where these other functions are not required for the application and not identified as part of markings, instructions, or packaging for the appliance, the additional UL component standard(s) need not be applied.

6.1.3 A component not anticipated by the requirements of this end product standard, not specifically covered by the component standards in 6.2 – 6.26, and that involves a risk of electric shock, fire, or

Documents
Document Sharing Hub
Full document details: UL 73 2022

personal injury, shall be additionally investigated in accordance with the applicable UL standard, and shall comply with items (b) – (e) of 6.1.1.

6.1.4 With regard to 6.1.3, reference to construction and performance requirements in another UL end product standard is appropriate where that standard anticipates normal and abnormal use conditions consistent with the application of the requirements of this end product standard.

6.1.5 Specific components are incomplete in construction features or restricted in performance capabilities. Such components are intended for use only under limited conditions, such as certain temperatures not exceeding specified limits, and shall be used only under those specific conditions.

6.2 Attachment plugs, receptacles, connectors, and terminals

6.2.1 Attachment plugs, receptacles, appliance couplers, appliance inlets (motor attachment plugs), and appliance (flatiron) plugs, shall comply with the Standard for Attachment Plugs and Receptacles, UL 498. See 6.2.9.

Exception No. 1: Attachment plugs and appliance couplers integral to cord sets or power supply cords are investigated in accordance with the requirements of the Standard for Cord Sets and Power-Supply Cords, UL 817 and need not comply with the Standard for Attachment Plugs and Receptacles, UL 498.

Exception No. 2: A fabricated pin terminal assembly(ies) need not comply with the Standard for Attachment Plugs and Receptacles, UL 498 if it complies with Mechanical Assembly, Section 9; Accessibility, Section 11; Current-Carrying Parts, Section 13; Electrical Insulation, Section 14; Spacings, Section 28 of this end-product standard; and the applicable performance requirements when tested in the end-product.

6.2.2 Quick-connect terminals, both connectors and tabs, for use with one or two 22 – 10 AWG copper conductors, having nominal widths of 2.8, 3.2, 4.8, 5.2, and 6.3 mm (0.110, 0.125, 0.187, 0.205, and 0.250 in), intended for internal wiring connections in appliances, or for the field termination of conductors to the appliance, shall comply with the Standard for Electrical Quick-Connect Terminals, UL 310.

Exception No. 1: Other sizes of quick-connect terminals shall be investigated with respect to crimp pull out, insertion-withdrawal, temperature rise, and all tests shall be conducted in accordance with the Standard for Electrical Quick-Connect Terminals, UL 310.

Exception No. 2: A connector that complies with the Standard for Electrical Quick-Connect Terminals, UL 310 may be used with an appropriately sized tab that complies with Section 16. The connector is the part of a quick-connect terminal that is pushed onto the male tab, and the tab is the part that receives the female connector.

6.2.3 Single and multipole connectors for use in data, signal, control and power applications within and between electrical equipment, and that are intended for factory assembly to copper or copper alloy conductors, or for factory assembly to printed wiring boards, shall comply with the Standard for Component Connectors for Data, Signal, Control and Power Applications, UL 1977. See 6.2.9.

6.2.4 Wire connectors shall comply with the Standard for Wire Connectors, UL 486A-486B.

6.2.5 Splicing wire connectors shall comply with the Standard for Splicing Wire Connectors, UL 486C.

6.2.6 Multi-pole splicing wire connectors that are intended to facilitate the connection of hard-wired utilization equipment to the branch-circuit conductors of buildings shall comply with the Standard for Insulated Multi-Pole Splicing Wire Connectors, UL 2459. See 6.2.9.

AVA Documents
Document Sharing Hub
Full document details: UL 73 2022

6.2.7 Equipment wiring terminals for use with all alloys of copper, aluminum, or copper-clad aluminum conductors, shall comply with Standard for Equipment Wiring Terminals for Use with Aluminum and/or Copper Conductors, UL 486E.

6.2.8 Terminal blocks shall comply with the Standard for Terminal Blocks, UL 1059, and, if applicable, be suitably rated for field wiring.

Exception: A fabricated part performing the function of a terminal block need not comply with the Standard for Terminal Blocks, UL 1059 if the part complies with the requirements of Wiring Terminals and Leads, 12.3.3; Current-Carrying Parts, Section 13; Electrical Insulation, Section 14; and Spacings, Section 28 of this end-product standard; and the applicable performance requirements when tested in the end-product. This exception does not apply to protective conductor terminal blocks.

6.2.9 Female devices (such as receptacles, appliance couplers, and connectors) that are intended, or that may be used, to interrupt current in the end product, shall be suitably rated for current interruption of the specific type of load, when evaluated with its mating plug or connector. For example, an appliance coupler that can be used to interrupt the current of a motor load shall have a suitable horsepower rating when tested with its mating plug.

6.3 Batteries and battery chargers

6.3.1 A lithium ion (Li-On) single cell battery shall comply with the requirements for secondary lithium cells in the Standard for Lithium Batteries, UL 1642.

6.3.2 Rechargeable nickel cadmium (Ni-Cad) cells and battery packs shall comply with the applicable construction and performance requirements of this end product standard.

6.3.3 Rechargeable nickel metal-hydride (Ni-MH) battery cells and packs shall comply with the applicable construction and performance requirements of this end product standard, or the applicable requirements for secondary cells or battery packs in the Standard for Household and Commercial Batteries, UL 2054.

6.3.4 Primary batteries (non-rechargeable) that comply with the relevant UL standard and 6.1.3 are considered to fulfill the requirements of this Standard.

6.3.5 A Class 2 battery charger shall comply with one of the following:

a) The Standard for Class 2 Power Units, UL 1310; or

b) The Standard for Information Technology Equipment – Safety – Part 1: General Requirements, UL 60950-1 with an output marked "Class 2", or that complies with the limited power source (LPS) requirements and is marked "LPS".

6.3.6 A non-Class 2 battery charger shall comply with one of the following:

a) The Standard for Power Units Other Than Class 2, UL 1012; or

b) The Standard for Information Technology Equipment – Safety – Part 1: General Requirements, UL 60950-1.

6.3.7 To reduce the risk of injury due to battery ingestion, an appliance covered by this Standard, or any accessory of the appliance, intended for use with one or more single cell batteries, shall comply with 6.3.8 if the batteries are:

a) Single cell batteries of lithium technologies;

Documents
Document Sharing Hub
Full document details: UL 73 2022

b) Diameter of 1.25 inch (32 mm) or less; and

c) Height that is less than its diameter.

6.3.8 An appliance provided with one or more batteries as specified in 6.3.7 shall comply with the Standard for Products Incorporating Button or Coin Cell Batteries of Lithium Technologies, UL 4200A or shall be intended for Industrial use only and provided with a marking to indicate "Industrial Use Only".

6.4 Boxes and raceways

6.4.1 Electrical boxes and the associated bushings and fittings, and raceways, of the types specified in Chapter 3 of the National Electrical Code, NFPA 70 and that comply with the relevant UL standard (such as the Standard for Metallic Outlet Boxes, UL 514A, the Standard for Nonmetallic Outlet Boxes, Flush-Device Boxes, and Covers, UL 514C, the Standard for Cover Plates for Flush-Mounted Wiring Devices, UL 514D, and 6.1 are considered to comply with the requirements of this end product standard.

6.5 Capacitors and filters

6.5.1 The component requirements for a capacitor are not specified. A capacitor complying with the Standard for Capacitors, UL 810, is considered to fulfill the requirements of 18.1.

6.5.2 Electromagnetic interference filters with integral enclosures that comply with one of the following standards are considered to comply with the requirements in 18.1:

a) The Standard for Electromagnetic Interference Filters, UL 1283; or

b) The Standard for Fixed Capacitors for Use in Electronic Equipment – Part 14: Sectional Specification: Fixed Capacitors for Electromagnetic Interference Suppression and Connection to the Supply Mains, UL 60384-14.

6.6 Controls

6.6.1 General

6.6.1.1 Auxiliary controls shall be evaluated using the applicable requirements of this end product standard and the requirements in Controls – End Product Test Parameters, Section 27, unless otherwise specified in this end product standard; see 6.6.1.4.

Exception: Auxiliary controls evaluated to the requirements in Supplement SA.

6.6.1.2 Operating (regulating) controls shall be evaluated using the applicable component standard requirements specified in 6.6.2 – 6.6.7 and the parameters in Section 27, unless otherwise specified in this end product standard; see 6.6.1.4.

Exception: Operating controls evaluated to the requirements in Supplement SA.

6.6.1.2.1 Operating controls that rely upon software for the normal operation of the end product where deviation or drift of the operating parameters of the control may result in an increased risk of electric shock, fire, or injury to persons, shall comply with:

a) The Standard for Tests for Safety-Related Controls Employing Solid-State Devices, UL 991; and Standard for Software in Programmable Components, UL 1998; or

b) The Standard for Automatic Electrical Controls – Part 1: General Requirements, UL 60730-1

AVA Documents
Document Sharing Hub
Full document details: UL 73 2022

6.6.1.3 Protective (limiting) controls shall be evaluated using the applicable component standard requirements specified in 6.6.2 – 6.6.7, and if applicable, the parameters in Section 27, unless otherwise specified in this end product standard.

Exception: Protective controls evaluated to the requirements in Supplement SA.

6.6.1.3.1 Solid-state protective controls that do not rely upon software as a protective component shall comply with:

a) The Standard for Tests for Safety-Related Controls Employing Solid-State Devices, UL 991; or

b) The Standard for Automatic Electrical Controls – Part 1: General Requirements, UL 60730-1, except Controls Using Software.

Exception: Solid-state protective controls evaluated to the requirements in Supplement SA.

6.6.1.3.2 Solid-state protective controls that rely upon software as a protective component shall comply with:

a) The Standard for Tests for Safety-Related Controls Employing Solid-State Devices, UL 991; and the Standard for Software in Programmable Components, UL 1998; or

b) The Standard for Automatic Electrical Controls – Part 1: General Requirements, UL 60730-1.

Exception: Solid-state protective controls evaluated to the requirements in Supplement SA.

6.6.1.4 An electronic auxiliary or operating control (e.g. a non-protective control), the failure of which would not increase the risk of electric shock, fire, or personal injury, need only be subjected to the applicable requirements of this end product standard or the requirements in Supplement SA.

6.6.2 Electromechanical and electronic controls

6.6.2.1 A control, other than as specified in 6.6.3 – 6.6.7, shall comply with:

a) The Standard for Solid-State Controls for Appliances, UL 244A;

b) The Standard for Temperature-Indicating and -Regulating Equipment, UL 873;

c) The Standard for Automatic Electrical Controls – Part 1: General Requirements, UL 60730-1; or

d) The circuit requirements in Supplement SA.

6.6.3 Liquid level controls

6.6.3.1 A liquid level control shall comply with:

a) The Standard for Solid-State Controls for Appliances, UL 244A;

b) The Standard for Temperature-Indicating and -Regulating Equipment, UL 873;

c) The Standard for Industrial Control Equipment, UL 508, the Standard for Low-Voltage Switchgear and Controlgear – Part 4-1: Contactors and Motor-Starters – Electromechanical Contactors and Motor-Starters, UL 60947-4-1, the Standard for Low-voltage Switchgear and Controlgear – Part 5-2: Control Circuit Devices and Switching Elements – Proximity Switches, UL 60947-5-2, and the Standard for Programmable Controllers – Part 2: Equipment Requirements and Tests, UL 61131-2;

AVA Documents
Document Sharing Hub
Full document details: UL 73 2022

d) The Standard for Automatic Electrical Controls – Part 1: General Requirements, UL 60730-1, and the Standard for Automatic Electrical Controls for Household and Similar Use; Part 2: Particular Requirements for Automatic Electrical Air Flow, Water Flow and Water Level Sensing Controls, UL 60730-2-15; or

e) The circuit requirements in Supplement SA.

6.6.3.2 A switch employed as part of a water level detection mechanism is to comply with one of the switch standards specified in 6.23.

6.6.4 Motor and speed controls

6.6.4.1 A control used to start, stop, regulate or control the speed of a motor shall comply with:

a) The Standard for Solid-State Controls for Appliances, UL 244A;

b) The Standard for Temperature-Indicating and -Regulating Equipment, UL 873;

c) The Standard for Industrial Control Equipment, UL 508, the Standard for Low-Voltage Switchgear and Controlgear – Part 4-1: Contactors and Motor-Starters – Electromechanical Contactors and Motor-Starters, UL 60947-4-1, the Standard for Low-voltage Switchgear and Controlgear – Part 5-2: Control Circuit Devices and Switching Elements – Proximity Switches, UL 60947-5-2, and the Standard for Programmable Controllers – Part 2: Equipment Requirements and Tests, UL 61131-2;

d) The Standard for Power Conversion Equipment, UL 508C;

e) Standard for Adjustable Speed Electrical Power Drive Systems – Part 5-1: Safety Requirements – Electrical, Thermal and Energy, UL 61800-5-1;

f) The Standard for Automatic Electrical Controls – Part 1: General Requirements, UL 60730-1, or

g) The circuit requirements in Supplement SA.

6.6.5 Pressure controls

6.6.5.1 A pressure control shall comply with one of the following:

a) The Standard for Solid-State Controls for Appliances, UL 244A;

b) The Standard for Industrial Control Equipment, UL 508, the Standard for Low-Voltage Switchgear and Controlgear – Part 4-1: Contactors and Motor-Starters – Electromechanical Contactors and Motor-Starters, UL 60947-4-1, the Standard for Low-voltage Switchgear and Controlgear – Part 5-2: Control Circuit Devices and Switching Elements – Proximity Switches, UL 60947-5-2, and the Standard for Programmable Controllers – Part 2: Equipment Requirements and Tests, UL 61131-2;

c) The Standard for Automatic Electrical Controls – Part 1: General Requirements, UL 60730-1; and the Standard for Automatic Electrical Controls – Part 2-6: Particular Requirements for Automatic Electrical Pressure Sensing Controls Including Mechanical Requirements, UL 60730-2-6, or

d) The circuit requirements in Supplement SA.

6.6.6 Temperature controls

6.6.6.1 A temperature control shall comply with:

Documents
Document Sharing Hub
Full document details: UL 73 2022

a) The Standard for Solid-State Controls for Appliances, UL 244A;

b) The Standard for Temperature-Indicating and -Regulating Equipment, UL 873;

c) The Standard for Industrial Control Equipment, UL 508, the Standard for Low-Voltage Switchgear and Controlgear – Part 4-1: Contactors and Motor-Starters – Electromechanical Contactors and Motor-Starters, UL 60947-4-1, the Standard for Low-voltage Switchgear and Controlgear – Part 5-2: Control Circuit Devices and Switching Elements – Proximity Switches, UL 60947-5-2, and the Standard for Programmable Controllers – Part 2: Equipment Requirements and Tests, UL 61131-2;

d) The Standard for Automatic Electrical Controls – Part 1: General Requirements, UL 60730-1; and the Standard for Automatic Electrical Controls – Part 2-9: Particular Requirements for Temperature Sensing Controls, UL 60730-2-9, or

e) The circuit requirements in Supplement SA.

6.6.6.2 A temperature sensing positive temperature coefficient (PTC) or a negative temperature coefficient (NTC) thermistor, that performs the same function as an operating or protective control shall comply with:

a) The Standard for Automatic Electrical Controls – Part 1: General Requirements, UL 60730-1; and the Standard for Standard for Automatic Electrical Controls – Part 2-9: Particular Requirements for Temperature Sensing Controls, UL 60730-2-9, with Annex J; or

b) The Standard for Thermistor-Type Devices, UL 1434.

6.6.6.3 A thermal cutoff shall comply with the Standard for Thermal-Links -– Requirements and Application Guide, UL 60691.

6.6.7 Timer controls

6.6.7.1 A timer control shall comply with:

a) The Standard for Solid-State Controls for Appliances, UL 244A;

b) The Standard for Automatic Electrical Controls – Part 1: General Requirements, UL 60730-1; and the Standard for Automatic Electrical Controls for Household and Similar Use, Part 2: Particular Requirements for Timers and Time Switches, UL 60730-2-7; or

c) The circuit requirements in Supplement SA.

6.7 Cords, cables, and internal wiring

6.7.1 A cord set or power supply cord shall comply with the Standard for Cord Sets and Power Supply Cords, UL 817.

6.7.2 Flexible cords and cables shall comply with the Standard for Flexible Cords and Cables, UL 62. Flexible cord and cables are considered to fulfill this requirement when preassembled in a cord set or power supply cord complying with the Standard for Cord Sets and Power Supply Cords, UL 817.

6.7.3 Internal wiring composed of insulated conductors shall comply with the Standard for Appliance Wiring Material, UL 758.

Exception No. 1: Insulated conductors need not comply with the Standard for Appliance Wiring Material, UL 758 if they comply with one of the following:

AVA Documents
Document Sharing Hub

Full document details: UL 73 2022

a) The Standard for Thermoset-Insulated Wires and Cables, UL 44;

b) The Standard for Thermoplastic-Insulated Wires and Cables, UL 83;

c) The Standard for Fixture Wire, UL 66; or

d) The applicable UL standard(s) for other insulated conductor types specified in Chapter 3 (Wiring Methods and Materials) of the National Electrical Code, NFPA 70.

Exception No. 2: Insulated conductors for specialty applications (e.g. data processing or communications) and located in a low-voltage circuit not involving the risk of fire or personal injury need not comply with Standard for Appliance Wiring Material, UL 758.

6.8 Cord reels

6.8.1 A cord reel shall comply with "special use cord reel" requirements of the Standard for Cord Reels, UL 355.

6.9 Film-coated wire (magnet wire)

6.9.1 The component requirements for film coated wire and Class 105 (A) insulation systems are not specified.

6.9.2 Film coated wire in intimate combination with one or more insulators, and incorporated in an insulation system rated Class 120 (E) or higher, shall comply with the magnet wire requirements in the Standard for Systems of Insulating Materials – General, UL 1446.

6.10 Gaskets and seals

6.10.1 Gaskets and seals that comply with the Standard for Gaskets and Seals, UL 157, are considered to fulfill the requirements of 10.2 and 50.2.2.

6.11 Ground-fault, arc-fault, and leakage current detectors/interrupters

6.11.1 Ground-fault circuit-interrupters (GFCI) for protection against electrical shock shall comply with the Standard for Ground-Fault Circuit-Interrupters, UL 943. The following statement, or equivalent, shall be included as a marking near the GFCI, or as an instruction in the manual: "Press the TEST button (then RESET button) every month to assure proper operation."

6.11.2 Appliance-leakage-current interrupters (ALCI) for protection against electrical shock shall comply with the Standard for Appliance-Leakage-Current Interrupters, UL 943B. An ALCI is not considered an acceptable substitute for a GFCI when a GFCI is required by the National Electrical Code, NFPA 70.

6.11.3 Equipment ground-fault protective devices shall comply with the Standard for Ground-Fault Sensing and Relaying Equipment, UL 1053, and applicable requirements of the Standard for Ground-Fault Circuit-Interrupters, UL 943.

6.11.4 Arc-fault circuit-interrupters (AFCI) shall comply with the Standard for Arc-Fault Circuit-Interrupters, UL 1699. See Section 24.

6.11.5 Leakage-current detector-interrupters (LCDI) and any shielded cord between the LCDI and appliance shall comply with Standard for Arc-Fault Circuit-Interrupters, UL 1699. See Section 24.

AVA Documents
Document Sharing Hub

Full document details: UL 73 2022

6.12 Heaters and heating elements

6.12.1 Electric resistance heating elements shall comply with the construction requirements of:

a) The Standard for Electric Heating Appliances, UL 499; or

b) The Standard for Sheathed Heating Elements, UL 1030.

Exception: Heating wire (e.g. rope heater) that complies with the Standard for Appliance Wiring Material, UL 758, and the requirements of this end product standard are considered to fulfill this requirement.

6.12.2 Thermistor-type heaters (e.g. PTC and NTC heaters) shall comply with the Standard for Thermistor-Type Devices, UL 1434.

6.13 Insulation systems

6.13.1 Materials used in a Class 105 (A) insulation system shall comply with 22.3.

6.13.2 Materials used in an insulation system that operates above Class 105 (A) temperatures shall comply with the Standard for Systems of Insulating Materials – General, UL 1446.

6.13.3 All insulation systems employing integral ground insulation shall comply with the requirements specified in the Standard for Systems of Insulating Materials – General, UL 1446.

6.14 Light sources and associated components

6.14.1 Lampholders and indicating lamps with integral lamp/lampholder (e.g. neon pilot lamp) shall comply with the Standard for Lampholders, UL 496.

Exception: Lampholders forming part of a luminaire that complies with the applicable UL luminaire standard are considered to comply with this requirement.

6.14.2 Lighting ballasts shall comply with:

a) The Standard for Fluorescent-Lamp Ballasts, UL 935, or

b) The Standard for High-Intensity Discharge Lamp Ballasts, UL 1029.

Exception No. 1: Ballasts forming part of a luminaire that complies with the applicable UL luminaire standard are considered to comply with this requirement.

Exception No. 2: Ballasts for other light sources shall comply with the applicable UL standard(s).

6.14.3 Light emitting diode (LED) light sources shall comply with the Standard for Light Emitting Diode (LED) Equipment For Use In Lighting Products, UL 8750.

Exception No. 1: LED light sources forming part of a luminaire that complies with the applicable UL luminaire standard are considered to comply with this requirement.

Exception No. 2: Individual LED light sources mounted on printed wiring boards and intended for indicating purposes need not comply with Standard for Light Emitting Diode (LED) Equipment For Use In Lighting Products, UL 8750, but shall comply with the applicable requirements of this end product standard.

AVA Documents
Document Sharing Hub

Full document details: UL 73 2022

6.15 Marking and labeling systems

6.15.1 A marking and labeling system shall comply with Standard for Marking and Labeling Systems, UL 969, under the specified environmental conditions.

Exception: A marking or labeling system that complies with Section 59 of this standard is considered to fulfill the requirement.

6.16 Motors and motor overload protection

6.16.1 General

6.16.1.1 General-purpose type motors having a NEMA frame size shall comply with the requirements specified in 6.16.2. This includes fractional HP motors rated up to 1 HP (typically NEMA frame sizes 42, 48, or 56), and integral HP motors rated 1 HP and greater (typically NEMA frame sizes 140 – 449T).

6.16.1.2 Motors not enclosed, or partially enclosed, by the end product enclosure shall comply with the requirements specified in 6.16.2.

6.16.1.3 Component type motors completely enclosed within the end product enclosure shall comply with the requirements specified in 6.16.2 or 6.16.3.

6.16.1.4 Motors located in a low voltage circuit are evaluated for the risk of fire and personal injury in accordance with the applicable requirements of this end product standard.

6.16.1.5 Low voltage component fans that comply with the Standard for Electric Fans, UL 507, are considered to fulfill the requirements of Section 22.

6.16.2 General-purpose type motors

6.16.2.1 A general-purpose type motor shall comply with the Standard for Rotating Electrical Machines – General Requirements, UL 1004-1.

6.16.3 Component type motors

6.16.3.1 Component type motors shall comply with either 6.16.3.2 or 6.16.3.3.

6.16.3.2 The motor shall comply with the Standard for Rotating Electrical Machines – General Requirements, UL 1004-1 except as noted in Table 6.1:

Table 6.1
Superseded requirements

UL 1004-1 exempted requirement	Superseded by the requirements in this end product standard
Current and Horsepower Relation	22.3.3
Cord-Connected Motors	12.2
Factory Wiring Terminals and Leads	Section 15
Electrical Insulation	Section 14

Table 6.1 Continued on Next Page

Documents
Document Sharing Hub
Full document details: UL 73 2022

Table 6.1 Continued

UL 1004-1 exempted requirement	Superseded by the requirements in this end product standard
Non-Metallic Functional Parts	Sections 7, 14, 22
Solid-State Controls, 7.2	6.6
Non-metallic enclosure thermal aging, 9.1.4	7.14
Motor enclosure (Cast Metal Enclosures, Sheet Metal Enclosures, and Polymeric Enclosures)	Section 7
Grounding	Section 19
Ventilation Openings: only applicable where the openings are on surfaces considered to be the appliance enclosure.	7.15
Accessibility of Uninsulated Live Parts, Film-Coated Wire, and Moving Parts	Section 11
Protection Against Corrosion	Section 10
Available fault current ratings for motor start and running capacitors, 26.6: not applicable for cord and plug connected appliances.	Section 18
Switch: not applicable to centrifugal starting switches	Section 26
With the exception of the Resilient Elastomer Mounting and Electrolytic Capacitor Tests requirements, the performance tests are not applicable	All applicable performance tests.
Only the following marking requirements are applicable: manufacturer's name or identification; rated voltage; rated frequency; number of phases if greater than 1; and multi-speed motors, other than a shaded-pole or a permanent-split-capacitor motor, shall be marked with the amperes and horsepower at each speed	70.1

6.16.3.3 The motor shall comply with the applicable component requirements in this section, the following construction requirements, and the applicable performance requirements (when tested in conjunction with the end product), of this end product standard:

a) Protection Against Corrosion, Section 10;

b) Terminal Compartment, Section 12 (12.3.2.3);

c) Electrical Insulation, Section 14;

d) Internal Wiring, Section 15;

e) Capacitors, Section 18;

f) Grounding, Section 19;

g) Motors, Section 22; and

h) Spacings, Section 28.

6.16.4 Motor overload protection

6.16.4.1 Thermal protection devices integral with the motor shall comply with:

a) The Standard for Overheating Protection for Motors, UL 2111;

b) The Standard for Thermally Protected Motors, UL 1004-3;

Documents
Document Sharing Hub
Full document details: UL 73 2022

c) The Standard for Automatic Electrical Controls – Part 1: General Requirements, UL 60730-1; and the Standard for Automatic Electrical Controls for Household and Similar Use; Part 2: Particular Requirements for Thermal Motor Protectors, UL 60730-2-2; in conjunction with the Standard for Thermally Protected Motors, UL 1004-3 (to evaluate the motor-protector combination), or

d) Electronic protection complying with the tests of UL 1004-3 and the circuit requirements of Supplement SA.

6.16.4.2 Impedance protection shall comply with:

a) The Standard for Overheating Protection for Motors, UL 2111; or

b) The Standard for Impedance Protected Motors, UL 1004-2.

6.16.4.3 Electronic protection integral to the motor shall comply with the Standard for Electronically Protected Motors, UL 1004-7, or the requirements in Supplement SA.

6.16.4.4 Except as indicated in 6.16.4.3, electronically protected motor circuits shall comply with one of the following. See 6.6.4 for basic control requirements.

a) The Standard for Tests for Safety-Related Controls Employing Solid-State Devices, UL 991. When the protective electronic circuit is relying upon software as a protective component, it shall comply with the requirements in the Standard for Tests for Software in Programmable Components, UL 1998. If software is relied upon to perform a safety function, it shall be considered software Class 1; or

b) The Standard for Automatic Electrical Controls – Part 1: General Requirements, UL 60730-1. If software is relied upon to perform a safety function, it shall be considered software Class B; or

c) The Standard for Power Conversion Equipment, UL 508C, when no software is relied upon to perform a safety function. If software is relied upon to perform a safety function, the circuit shall additionally comply with applicable requirements in (a) or (b) of this section; or

d) The Standard for Adjustable Speed Electrical Power Drive Systems – Part 5-1: Safety Requirements – Electrical, Thermal and Energy, UL 61800-5-1, when no software is relied upon to perform a safety function. If software is relied upon to perform a safety function, the circuit shall additionally comply with applicable requirements in (a) or (b).

Exception: Compliance with the above standards is not required for an electronically protected motor circuit if there is no risk of fire, electric shock, or injury to persons during abnormal testing with the motor electronic circuit rendered ineffective; compliance with the applicable requirements of this end product standard is then required.

6.17 Overcurrent protection

6.17.1 Fuses shall comply with the Standard for Low-Voltage Fuses – Part 1: General Requirements, UL 248-1, and the applicable Part 2 (e.g. UL 248-5). Defined use fuses that comply with UL 248-1 and another applicable standard for the fuse are considered to comply with this requirement.

6.17.2 Fuseholders shall comply with the Standard for Fuseholders – Part 1: General Requirements, UL 4248-1, and the applicable Part 2 (e.g. UL 4248-9).

6.17.3 Circuit breakers shall comply with the Standard for Molded-Case Circuit Breakers, Molded-Case Switches and Circuit-Breaker Enclosures, UL 489.

AVA Documents
Document Sharing Hub

Full document details: UL 73 2022

Exception: Circuit breakers used in telecommunications circuitry that comply with the Standard for Circuit Breakers For Use in Communications Equipment, UL 489A, need not comply with the Standard for Molded-Case Circuit Breakers, Molded-Case Switches and Circuit-Breaker Enclosures, UL 489.

6.17.4 Circuit breakers having integral ground fault circuit interrupter capability for protection against electrical shock shall additionally comply with the Standard for Ground-Fault Circuit-Interrupters, UL 943.

6.17.5 Supplementary protectors shall comply with the Standard for Supplementary Protectors for Use in Electrical Equipment, UL 1077.

6.17.6 Fusing resistors shall comply with the Standard for Fusing Resistors and Temperature-Limited Resistors for Radio- and Television-Type Appliances, UL 1412.

6.18 Polymeric materials and enclosures

6.18.1 Unless otherwise specified in this end product standard, polymeric electrical insulating materials and enclosures shall comply with the applicable requirements of the Standard for Polymeric Materials – Use in Electrical Equipment Evaluations, UL 746C.

6.18.2 Metallized or painted polymeric parts or enclosures shall comply with the applicable requirements of the Standard for Polymeric Materials – Use in Electrical Equipment Evaluations, UL 746C. This requirement is not applicable to exterior surfaces of polymeric enclosure materials or parts provided that the metallized coating or paint does not offer a continuous path for an internal flame to propagate externally.

6.19 Power supplies

6.19.1 A Class 2 power supply shall comply with one of the following:

a) The Standard for Class 2 Power Units, UL 1310; or

b) The Standard for Information Technology Equipment – Safety – Part 1: General Requirements, UL 60950-1, with an output marked "Class 2", or that complies with the limited power source (LPS) requirements and is marked "LPS".

6.19.2 A non-Class 2 power supply shall comply with one of the following:

a) The Standard for Power Units Other Than Class 2, UL 1012;

b) The Standard for Information Technology Equipment –Safety – Part 1: General Requirements, UL 60950-1, or

c) The requirements in Supplement SA.

6.20 Printed wiring boards

6.20.1 Printed wiring boards, including the coatings, shall comply with the Standard for Printed-Wiring Boards, UL 796.

Exception: A printed-wiring board in a Class 2 nonsafety circuit is not required to comply with the bonding requirements in the Standard for Printed-Wiring Boards, UL 796 if the board is separated from parts of other circuits such that loosening of the bond between the foil conductor and the base material will not result in the foil conductors or components coming in contact with parts of other circuits of the control or of the end-use product.

Documents
Document Sharing Hub
Full document details: UL 73 2022

6.20.2 A printed-wiring board containing circuitry in a line-connected circuit or a safety circuit shall comply with the direct-support requirements for insulating materials in the Standard for Polymeric Materials – Use in Electrical Equipment Evaluation, UL 746C.

6.20.3 Unless otherwise specified, the flammability class and temperature rating shall be that specified for insulating materials in the Standard for Polymeric Materials – Use in Electrical Equipment Evaluations, UL 746C.

6.21 Semiconductors and small electronic components

6.21.1 A power switching semiconductor device that is relied upon to provide isolation to ground shall comply with the Standard of Safety for Electrically Isolated Semiconductor Devices, UL 1557. If considered necessary, the dielectric voltage withstand tests required by UL 1557 shall be conducted applying the criteria of Section 48.

6.21.2 An optical isolator that is relied upon to provide isolation between primary and secondary circuits or between other circuits as required by this end product standard shall comply with the Standard for Safety for Optical Isolators, UL 1577. If considered necessary, the dielectric voltage withstand tests required by UL 1577 shall be conducted applying the criteria of Section 48. The dielectric test voltage is to be applied between the input and output terminals of the optical isolator.

6.21.3 Except as specified in 6.21.4, component requirements are not specified for small electronic components on printed wiring boards, including diodes, transistors, resistors, inductors, integrated circuits, and capacitors not directly connected to the supply source.

6.21.4 Where an electronic component is determined to be a critical component during the testing of the Abnormal Operation Test, Section 54, one of the following standards shall be applied. See 27.4 for the test parameters to be used.

a) The Standard for Tests for Safety-Related Controls Employing Solid-State Devices, UL 991; and as applicable, the Standard for Software in Programmable Components, UL 1998 for controls that rely upon software as a protective component; or

b) The Standard for Automatic Electrical Controls – Part 1: General Requirements, UL 60730-1.

6.21.5 A critical component is a component that performs one or more safety-related functions whose failure results in a condition, such as the risk of fire, electric shock, or injury to persons, in the end product application.

6.21.6 A critical component may also be identified using a failure-mode and effect analysis (FMEA) in accordance with the Failure-Mode and Effect Analysis (FMEA) of the Standard for Tests for Safety-Related Controls Employing Solid-State Devices, UL 991.

6.21.7 Portions of a circuit comprised of a microcontroller or other programmable device that performs a back-up, limiting, or other safety function intended to reduce the risk of fire, electric shock, or injury to persons shall comply with the Standard for Automatic Electrical Controls – Part 1: General Requirements, UL 60730-1, Annex H.

6.22 Supplemental insulation, insulating bushings, and assembly aids

6.22.1 The requirements for supplemental insulation (e.g. tape, sleeving or tubing) are not specified unless the insulation or device is required to comply with 15.2.6 or a performance requirement of this Standard. In such cases:

Documents
Document Sharing Hub
Full document details: UL 73 2022

a) Insulating tape shall comply with the Standard for Polyvinyl Chloride, Polyethylene, and Rubber Insulating Tape, UL 510;

b) Sleeving shall comply with the Standard for Coated Electrical Sleeving, UL 1441;

c) Tubing shall comply with the Standard for Extruded Insulating Tubing, UL 224.

6.22.2 Wire positioning devices shall comply with Electrical Insulation, Section 14, and Separation of Circuits, Section 17. A device that complies with the Standard for Positioning Devices, UL 1565, is considered to comply with this requirement.

6.22.3 Insulating bushings that comply with 6.1 and the Standard for Insulating Bushings, UL 635, are considered to comply with the requirements of this Standard. Tests specified in this standard (e.g. Strain Relief Test) may still need to be performed to confirm the combination of the insulating bushing and the supporting part are suitable.

6.23 Switches

6.23.1 Switches shall comply with one of the following, as applicable:

a) *Deleted*

b) The Standard for Switches for Appliances – Part 1: General Requirements, UL 61058-1;

c) The Standard for General Use Snap Switches, UL 20;

d) The Standard for Nonindustrial Photoelectric Switches for Lighting Control, UL 733A; or

e) The circuit requirements in Supplement SA.

Exception: Switching devices that comply with the applicable UL standard for specialty applications (e.g. transfer switch equipment), industrial use (e.g. contactors, relays, auxiliary devices), or are integral to another component (e.g. switched lampholder) need not comply.

6.23.2 A clock-operated switch, in which the switching contacts are actuated by a clock-work, by a gear-train, by electrically-wound spring motors, by electric clock-type motors, or by equivalent arrangements shall comply with one of the following:

a) The Standard for Clock-Operated Switches, UL 917; or

b) The Standard for Automatic Electrical Controls – Part 1: General Requirements, UL 60730-1; and the Standard for Automatic Electrical Controls for Household and Similar Use; Part 2: Particular Requirements for Timers and Time Switches, UL 60730-2-7.

6.23.3 A timer or time switch, incorporating electronic timing circuits or switching circuits, with or without separable contacts, shall comply with the requirements for an operating control with Type 1 action for 6,000 cycles of operation, or as a manual control for 5,000 cycles of operation, in accordance with the following:

a) The Standard for Solid-State Controls for Appliances, UL 244A;

b) The Standard for Automatic Electrical Controls – Part 1: General Requirements, UL 60730-1; and the Standard for Automatic Electrical Controls for Household and Similar Use; Part 2: Particular Requirements for Timers and Time Switches, UL 60730-2-7; or

c) The circuit requirements in Supplement SA.

Documents
Document Sharing Hub
Full document details: UL 73 2022

6.23.4 A timer or time switch, incorporating electronic timing circuits or switching circuits, with or without separable contacts, that functions as a protective control, shall comply with the requirements for a protective control; see 6.6.1.3.

6.24 Transformers

6.24.1 General-purpose transformers shall comply with the Standard for Low Voltage Transformers: General Requirements, UL 5085-1; and the Standard for Low Voltage Transformers: General Purpose Transformers, UL 5085-2.

Exception No. 1: A transformer that is completely enclosed within the end product enclosure, and that meets the applicable construction and performance requirements of this end product standard when tested in conjunction with the end product, meets the intent of this requirement. See Section 62.

Exception No. 2: A transformer that complies with the Standard for Transformers and Motor Transformers for Use in Audio-, Radio-, and Television-Type Appliances, UL 1411, and that is used in a circuit involving an audio or video component, meets the intent of this requirement.

6.24.2 Class 2 and Class 3 transformers shall comply with the Standard for Low Voltage Transformers: General Requirements, UL 5085-1; and the Standard for Low Voltage Transformers: Class 2 and Class 3 Transformers, UL 5085-3.

Exception: Transformers located in a low voltage circuit that do not involve a risk of fire or personal injury need not comply with this requirement.

6.25 Valves (electrically operated) and solenoids

6.25.1 Electrically operated valves shall comply with:

a) The Standard for Electrically Operated Valves, UL 429

b) The Standard for Automatic Electrical Controls – Part 1: General Requirements, UL 60730-1; and the Standard for Automatic Electrical Controls for Household and Similar Use, Part 2: Particular Requirements for Electrically Operated Water Valves, Including Mechanical Requirements, UL 60730-2-8.

Exception: Automatic valves intended for use with natural gas, manufactured gas, LP-gas or LP-gas-air mixtures shall comply with the Standard for Automatic Valves for Gas Appliances, ANSI Z21.21a/CSA 6.5a.

6.25.2 Solenoids shall comply with the applicable construction and performance requirements of this end-product standard, or with the Outline of Investigation for Solenoids, UL 906.

6.26 Video and audio components

6.26.1 A video component (e.g. a television or video) or an audio component (such as a CD player, radio, MP3 player, or audio sound system) provided with a motor-operated appliance shall comply with the following:

a) The Standard for Audio, Video, and Similar Electronic Apparatus-Safety Requirements, UL 60065; or

b) The Standard for Information Technology Equipment – Safety – Part 1: General Requirements, UL 60950-1.

AVA Documents
Document Sharing Hub

Full document details: UL 73 2022

6.26.2 The location, orientation, and intended use of a video or audio component shall be evaluated with the motor-operated appliance to ensure that the component(s) does not increase the risk of shock, fire, or personal injury. Examples include, but are not limited to, the mechanical mounting of the component, and the effect of the audio and video component on the overall leakage current of the appliance.

7 Frame and Enclosure

7.1 An appliance shall be formed and assembled so that it will have the strength and rigidity necessary to resist the abuses to which it is likely to be subjected, without increasing the risk of fire, electric shock or injury to persons due to total or partial collapse with resulting reduction of spacings, loosening or displacement of parts, or other serious defects.

7.2 For unreinforced, flat surfaces in general, cast metal shall not be less than 1/8 in (3.2 mm) thick, except that malleable iron may be not less than 3/32 in (2.4 mm) and die cast metal may be not less than 5/64 in (2.0 mm) thick. Corresponding thicknesses of not less than 3/32, 1/16 (1.6 mm), and 3/64 in (1.2 mm), respectively, may be acceptable if the surface under consideration is curved, ribbed, or otherwise reinforced, or if the shape or size, or both, of the surface is such that the necessary mechanical strength is provided.

7.3 An enclosure of sheet metal shall be judged with respect to its size, shape, thickness of metal, and its application, considering the intended use of the complete appliance. The use of sheet steel having a thickness of less than 0.026 in (0.66 mm) if uncoated or 0.029 in (0.74 mm) if galvanized or of nonferrous sheet metal having a thickness of less than 0.036 in (0.91 mm) is not recommended, except for relatively small areas or for surfaces that are curved or otherwise reinforced.

7.4 Sheet metal to which a wiring system is to be connected in the field shall have a thickness not less than 0.032 in (0.81 mm) if uncoated steel, not less than 0.034 in (0.86 mm) if galvanized steel, and not less than 0.045 in (1.14 mm) if nonferrous.

7.5 Among the factors that shall be taken into consideration when judging a nonmetallic enclosure or an enclosure of magnesium are resistance to:

a) Mechanical damage,

b) Impact,

c) Moisture-absorption,

d) Combustion, and

e) Distortion at temperatures to which the material may be subjected under conditions of normal or abnormal use.

7.6 The enclosure of a remotely or automatically controlled appliance shall reduce the risk of molten metal, burning insulation, flaming particles, or the like from falling on combustible materials, including the surface upon which the appliance is supported.

7.7 The requirement in 7.6 will necessitate that a switch, a relay, a solenoid, or the like be individually and completely enclosed, except for terminals, unless it can be shown that malfunction of the component would not result in a risk of fire, or there are no openings in the bottom of the appliance enclosure. It will also necessitate the use of a barrier of noncombustible material:

a) Under a motor unless:

1) The structural parts of the motor or of the appliance provide the equivalent of such a barrier;

AVA Documents
Document Sharing Hub

Full document details: UL 73 2022

2) The protection provided with the motor is such that no burning insulation or molten material falls to the surface that supports the appliance when the motor is energized under each of the following fault conditions:

i) Open main winding;

ii) Open starting winding;

iii) Starting switch short-circuited; and

iv) Capacitor of permanent-split capacitor motor short-circuited – the short circuit is to be applied before the motor is energized, and the rotor is to be locked;

3) The motor is provided with a thermal motor protector – a protective device that is sensitive to temperature and current – that will reduce the risk of the temperature of the motor windings from exceeding 125°C (257°F) under the maximum load under which the motor will run without causing the protector to cycle and from exceeding 150°C (302°F) with the rotor of the motor locked; or

4) The motor complies with the requirements in the Standard for Overheating Protection for Motors, UL 2111, and the temperature of the motor winding will not exceed 150°C during the first 72 h of operation with the rotor of the motor locked.

b) Under wiring, unless it is neoprene, cross-linked polyethylene, or thermoplastic insulated.

7.8 The barrier mentioned in 7.7 shall be horizontal, shall be located as illustrated in Figure 7.1, and shall not have an area less than that described in that illustration. Openings for drainage, ventilation, and the like may be employed in the barrier, provided such openings would not permit molten metal, burning insulation, or the like to fall on combustible material.

Documents
Document Sharing Hub

Full document details: UL 73 2022

Figure 7.1

Location and extent of barrier

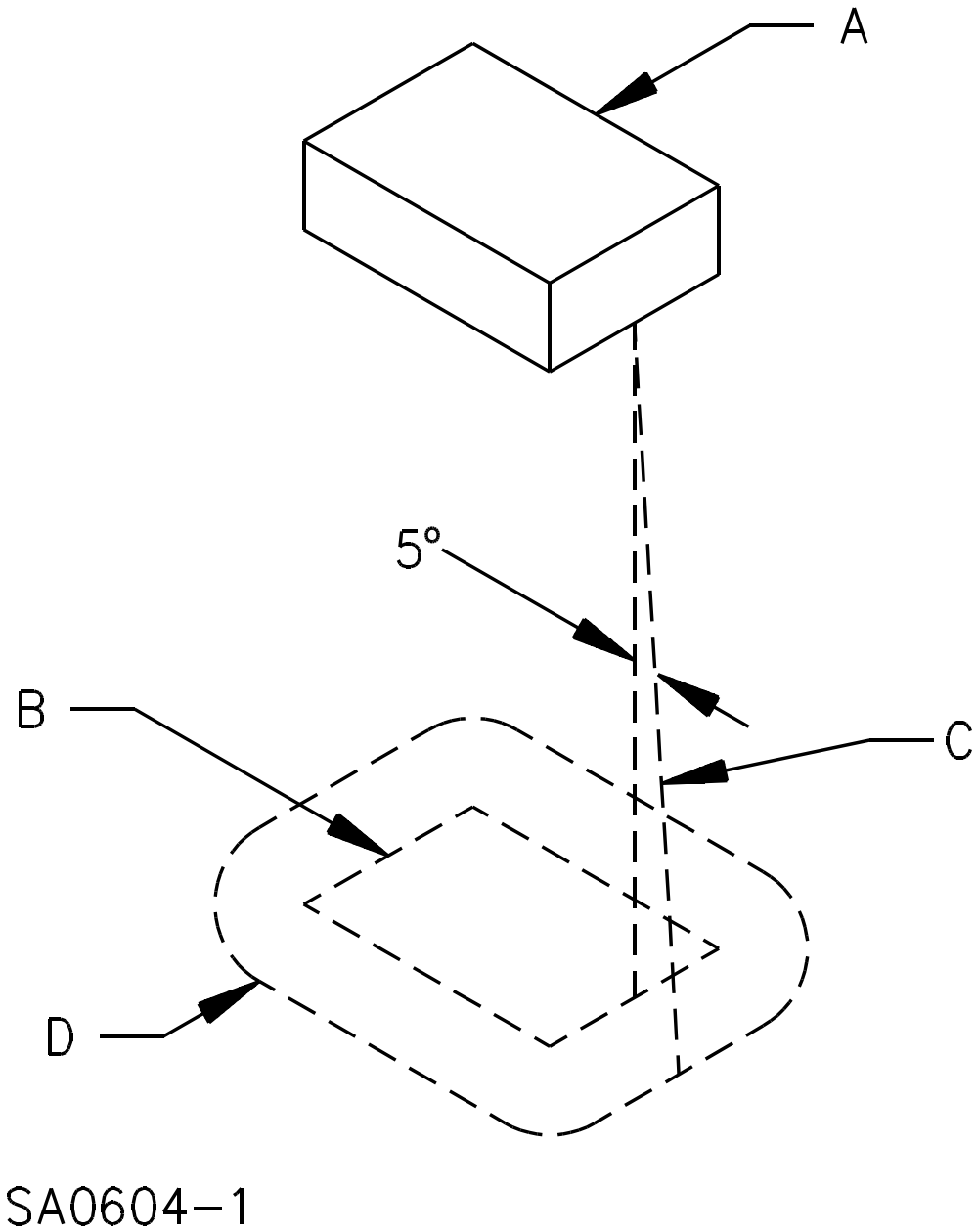

NOTES –

A – Region to be shielded by barrier. This will consist of the entire component if it is not otherwise shielded and will consist of the unshielded portion of a component that is partially shielded by the component enclosure or equivalent.

B – Projection of outline of component on horizontal plane.

C – Inclined line that traces out minimum area of barrier. The line is always (1) tangent to the component, (2) 5° from the vertical, and (3) oriented so that the area traced out on a horizontal plane is maximum.

D – Location (horizontal) and minimum area for barrier. The area is that included inside the line of intersection traced out by the inclined line C and the horizontal plane of the barrier.

Documents
Document Sharing Hub
Full document details: UL 73 2022

7.9 A door or a cover of an enclosure that provides access to any overload protective device that requires resetting or renewal shall be hinged or otherwise attached in an equivalent manner.

7.10 Means shall be provided for holding the door or cover over a fuseholder in a closed position, and the door or cover shall be tight-fitting.

7.11 A cord-connected appliance that is provided with keyhole slots, notches, hanger holes, or the like, for hanging on a wall shall be constructed in such a manner that the hanging means is not accessible without removing the appliance from the supporting means.

7.12 To determine whether a product complies with the requirement in 7.11, any part of the enclosure or barrier that can be removed without the use of tools to gain access to the hanging means is to be removed.

7.13 An opening in the appliance provided for hanging shall be located or guarded so that a nail, hook, or the like does not displace a part that would create a risk of fire or electric shock, and does not contact one of the following:

a) An uninsulated live part.

b) Magnet wire.

c) Internal wiring.

d) Moving parts.

e) Any other part likely to create a risk of fire or electric shock.

7.14 An enclosure of polymeric material shall comply with the Standard for Polymeric Materials – Use in Electrical Equipment Evaluations, UL 746C. The polymeric enclosure material of an appliance for outdoor-use shall be subjected to the Ultraviolet Light Exposure Test and the Cold Impact Test.

Exception: For an outdoor use appliance marked in accordance with 70.8.2, the Ultraviolet Light Exposure Test is not applicable and the conditioning for the Cold Impact Test is conducted at 0 ±2°C.

7.15 The polymeric housing of a component is not considered to be an appliance enclosure unless this part is the sole insulation (excluding air) between a live part and an external surface of the appliance.

7.16 An appliance intended for outdoor use shall comply with Water Spray Test, Section 50.1.

Exception: This requirement is not applicable if the appliance is marked in accordance with 70.8.2.

7.17 Polymeric enclosure and insulating materials, internal wiring, and other polymeric component parts shall be acceptably resistant to degradation when exposed to ultraviolet light, if degradation of the part would result in non-compliance with other requirements of this Standard. To determine whether a part is acceptably resistant to ultraviolet light, the part shall be subjected to the Ultraviolet Light Exposure Test specified in the Standard for Polymeric Materials – Use in Electrical Equipment Evaluations, UL 746C.

8 Adhesives Used to Secure Parts

8.1 An adhesive that is relied upon to reduce a risk of fire, electric shock, or injury to persons shall comply with the requirements for adhesives in the Standard for Polymeric Materials – Use in Electrical Equipment Evaluations, UL 746C.

Documents
Document Sharing Hub
Full document details: UL 73 2022

8.2 The requirement in 8.1 also applies to an adhesive used to secure a conductive part, including a nameplate, that may, if loosened or dislodged:

a) Energize an accessible dead metal part,

b) Make a live part accessible,

c) Reduce spacings below the minimum acceptable values, or

d) Short-circuit live parts.

8.3 Whether the conditions mentioned in 8.2(a) – (d) can occur is to be considered with respect to both:

a) A part inside the device, and

b) A part on the outside of the device that may affect equipment in which the device is to be installed.

9 Mechanical Assembly

9.1 An appliance shall be assembled so that it will not be adversely affected by the vibration of normal operation. Brush caps shall be tightly threaded or otherwise constructed to reduce the risk of loosening.

9.2 A switch other than a through-cord switch, a lampholder, an attachment-plug receptacle, a motor-attachment plug, or similar component shall be securely mounted and shall be prevented from turning. See 9.4.

Exception No. 1: A switch need not be prevented from turning provided:

a) The switch is of a plunger or other type that does not tend to rotate when operated. A toggle switch is considered to be subject to forces that tend to turn the switch during normal operation of the switch;

b) The means for mounting the switch makes it unlikely that operation of the switch will loosen it;

c) The spacings are not reduced below the minimum required values if the switch rotates; and

d) The normal operation of the switch is by mechanical means rather than by direct contact by persons.

Exception No. 2: A lampholder of the type in which the lamp cannot be replaced, such as a neon pilot or indicator light in which the lamp is sealed in a nonremovable jewel, need not be prevented from turning if rotation cannot reduce spacings below the minimum required values.

9.3 Uninsulated live parts shall be secured to the base or mounting surface so that they will be prevented from turning or shifting in position, if such motion may result in a reduction of spacings below the minimum acceptable values.

9.4 The means for preventing the turning or shifting mentioned in 9.2 and 9.3 is to consist of more than friction between surfaces – for example, a properly applied lock washer is acceptable as the means for preventing a small stem-mounted switch or other device having a single-hole mounting means from turning.

Documents
Document Sharing Hub
Full document details: UL 73 2022

10 Protection Against Corrosion

10.1 Iron and steel parts shall be protected against corrosion by enameling, galvanizing, plating, or other equivalent means, if corrosion of such unprotected parts would be likely to result in a risk of fire, electric shock, or injury to persons.

Exception No. 1: Surfaces of sheet-steel and cast-iron parts within an enclosure may not be required to be protected against corrosion if the oxidation of the metal due to the exposure to air and moisture is not likely to be appreciable. The thickness of metal and temperature are also to be considered.

Exception No. 2: This requirement does not apply to bearings, laminations, or minor parts of iron or steel, such as washers, screws, and the like.

10.2 If deterioration of a liquid container provided as a part of an appliance would result in a risk of fire or electric shock, the container shall be of a material that is resistant to corrosion by the liquid intended to be used therein.

11 Accessibility of Uninsulated Live Parts and Film-Coated Wire

11.1 To reduce the likelihood of unintentional contact that may involve a risk of electric shock from an uninsulated live part or film-coated wire, an opening in an enclosure shall comply with either item (a) or (b).

a) For an opening that has a minor dimension (see 11.5) less than 1 in (25.4 mm), such a part or wire shall not be contacted by the probe illustrated in Figure 11.1.

b) For an opening that has a minor dimension of 1 in or more, such a part or wire shall be spaced from the opening as specified in Table 11.1.

Exception: A motor other than one used in either a hand-held appliance or a hand-supported portion of an appliance need not comply with these requirements if it complies with the requirements in 11.2.

Documents
Document Sharing Hub

Full document details: UL 73 2022

Figure 11.1

Articulate probe with web stop

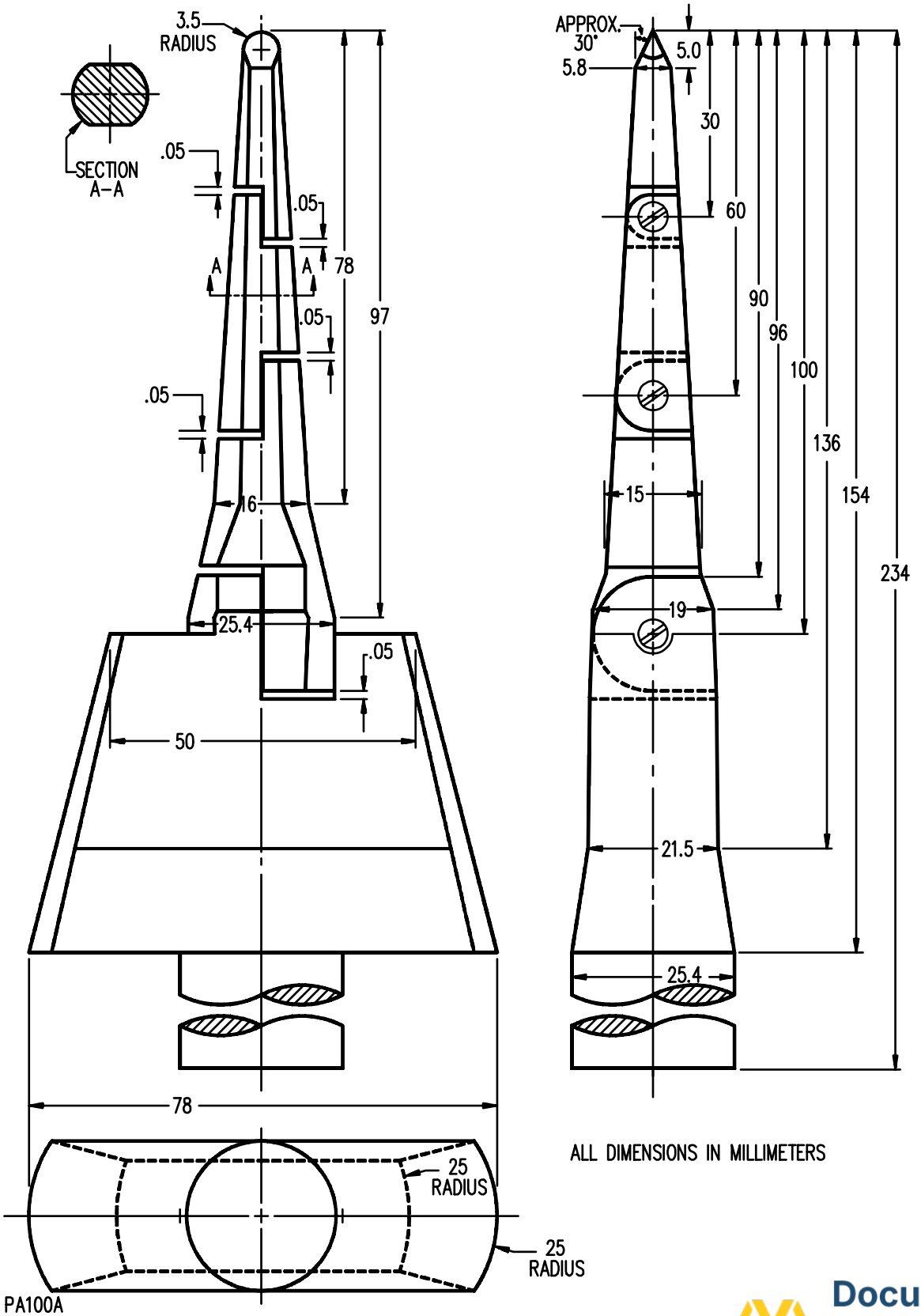

Documents
Document Sharing Hub
Full document details: UL 73 2022

Table 11.1
Minimum acceptable distance from an opening to a part that may involve a risk of electric shock

Minimum dimension[a] of opening, in (mm)[b]		Minimum distance from opening to part, in (mm)[b]	
3/4[c]	(19.1)	4-1/2	(114)
1[c]	(25.4)	6-1/2	(165)
1-1/4	(31.8)	7-1/2	(190)
1-1/2	(38.1)	12-1/2	(318)
1-7/8	(47.6)	15-1/2	(394)
2-1/8	(54.0)	17-1/2	(444)
[d]		30	(762)

[a] See 11.5.
[b] Between 3/4 and 2-1/8 in, interpolation is to be used to determine a value between values specified in the table.
[c] Any dimension less than 1 in applies to a motor only.
[d] More than 2-1/8 in, but not more than 6 in (152 mm).

11.2 With respect to a part or wire as mentioned in 11.1, in an integral enclosure of a motor as mentioned in the Exception to 11.1:

a) An opening that has a minor dimension (see 11.5) less than 3/4 in (19.1 mm) is acceptable if:

1) Film-coated wire cannot be contacted by the probe illustrated in Figure 11.3;

2) In a directly accessible motor (see 11.6), an uninsulated live part cannot be contacted by the probe illustrated in Figure 11.4; and

3) In an indirectly accessible motor (see 11.6), an uninsulated live part cannot be contacted by the probe illustrated in Figure 11.2.

b) An opening that has a minor dimension of 3/4 in or more is acceptable if a part or wire is spaced from the opening as specified in Table 11.1.

Documents
Document Sharing Hub
Full document details: UL 73 2022

Figure 11.2

Straight probe

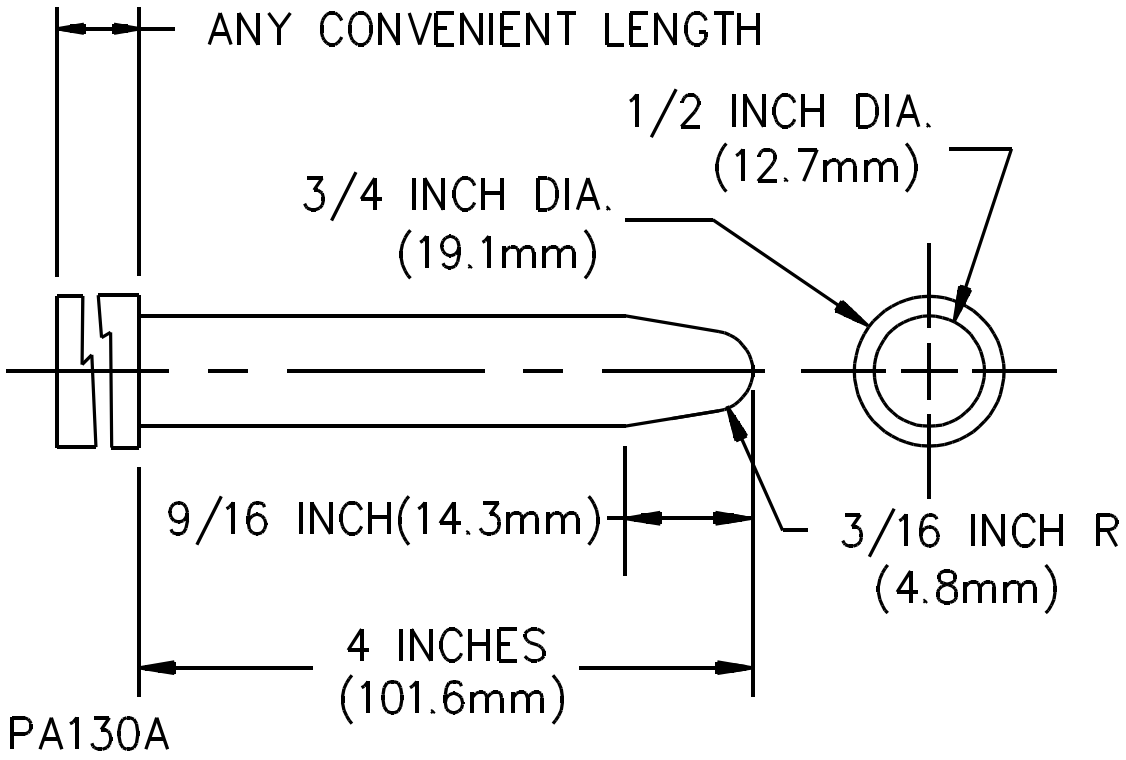

Documents
Document Sharing Hub
Full document details: UL 73 2022

Figure 11.3

Straight probe

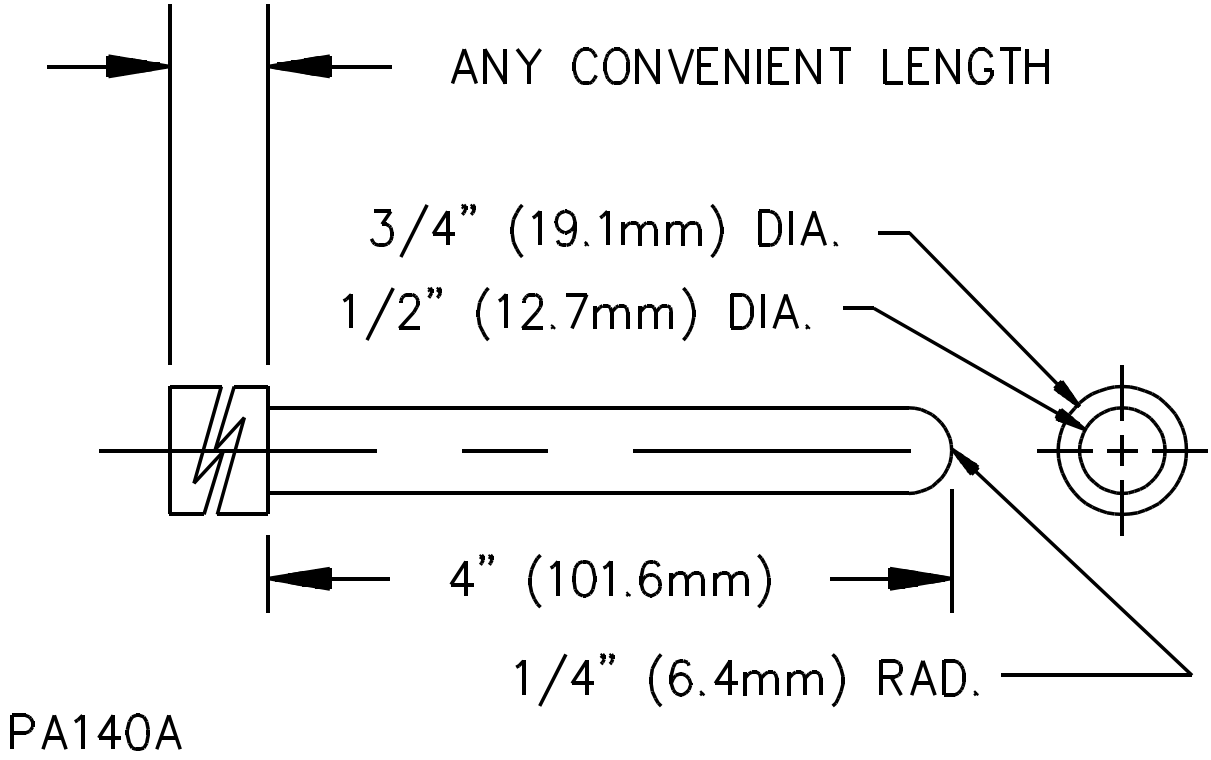

Documents
Document Sharing Hub
Full document details: UL 73 2022

Figure 11.4

International Electrotechnical Commission (IEC)

Articulate accessibility probe with stop plate

All dimensions in millimeters

Courtesy of IEC

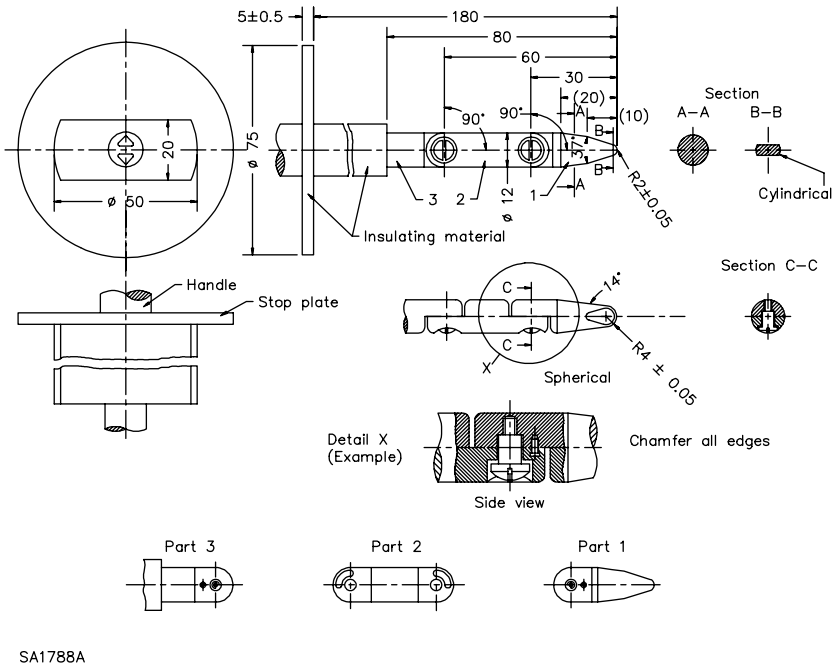

11.3 The probes mentioned in 11.1 and 11.2 and illustrated in Figure 11.1 – Figure 11.4 shall be applied to any depth that the opening will permit, and shall be rotated or angled before, during, and after insertion through the opening to any position that is necessary to examine the enclosure. The probe illustrated in Figure 11.1 and Figure 11.4 shall be applied in any possible configuration; and, if necessary, the configuration shall be changed after insertion through the opening.

11.4 The probes mentioned in 11.3 and 11.5 shall be used as measuring instruments to judge the accessibility provided by an opening, and not as instruments to judge the strength of a material; they shall be applied with the minimum force necessary to determine accessibility.

11.5 With reference to the requirements in 11.1 and 11.2, the minor dimension of an opening is the diameter of the largest cylindrical probe having a hemispherical tip that can be inserted through the opening.

11.6 With reference to the requirements in 11.2, an indirectly accessible motor is a motor that is accessible only by opening or removing a part of the outer enclosure, such as a guard or panel, than can be opened or removed without using a tool, or that is located at such a height or is otherwise guarded or enclosed so that it is unlikely to be contacted. A directly accessible motor is a motor that can be contacted without opening or removing any part or that is located so as to be accessible to contact.

11.7 During the examination of an appliance to determine whether it complies with the requirements in 11.1 or 11.2, a part of the enclosure that may be opened or removed by the user without a tool (to attach an accessory, to make an operating adjustment, or for other reasons) is to be opened or removed.

Documents
Document Sharing Hub
Full document details: UL 73 2022

11.8 With reference to the requirements in 11.1 and 11.2, insulated brush caps are not required to be additionally enclosed.

12 Supply Connections

12.1 General

12.1.1 An ultrasonic cleaner provided with a mechanical connection (such as a threaded or soldered plumbing connection) that does not permit the ready removal of the appliance for maintenance or repair, shall not be provided with a flexible cord for connection to the electrical supply.

12.1.2 The appliance described in 12.1.1 shall have provision for permanent electrical connection. See 12.3.2 and 12.3.3.

12.2 Cord-connected appliances

12.2.1 Carbonators

12.2.1.1 A carbonator that is connected to the electrical supply by a flexible cord shall comply with the following:

a) All waterline connections shall be by means of flexible hose or equivalent;

b) The flexible cord shall be of Type SJT or of a Type equally serviceable, shall not be longer than 10 ft (3.05 m), and shall have a grounding conductor and a grounding type attachment plug; and

c) In addition to complying with the other applicable requirements in the standard, the wiring compartment shall be constructed and the cord attached so a permanent connection is able to be made to the power supply. The construction shall comply with the following conditions:

1) The cord shall enter the wiring compartment through a 7/8-in (22.2-mm) diameter hole that, after the cord and any bushing or fitting provided have been removed, provides an opening for attachment of a wiring system that is intended for the appliance; and

2) The power-supply cord is connected to the internal wiring by a device such as a terminal block, pressure cable connector, or a similar device, that accommodates permanent wiring having an ampacity rated for the appliance, and that complies with 12.3.2 – 12.3.4.

12.2.2 Cords and plugs

12.2.2.1 An appliance intended to be connected to the power-supply circuit by means of a flexible cord shall be provided with a flexible cord and an attachment plug for connection to the supply circuit.

12.2.2.2 The attachment plug of an appliance intended to be connected to a nominal 120 V circuit, and employing devices required to be connected to a specific supply conductor as specified in 21.2, 25.2, and 26.3 shall be a polarized type. The connections to the attachment plug shall be in accordance with Figure 12.1. The polarity identification of the supply cord shall be in accordance with Table 12.1. See 73.4.

Documents
Document Sharing Hub
Full document details: UL 73 2022