UL 746E

STANDARD FOR SAFETY

Polymeric Materials – Industrial Laminates, Filament Wound Tubing, Vulcanized Fibre, and Materials Used In Printed Wiring Boards

Documents
Document Sharing Hub

Full document details: UL 746E 2022

Documents
Document Sharing Hub

Full document details: UL 746E 2022

UL Standard for Safety for Polymeric Materials – Industrial Laminates, Filament Wound Tubing, Vulcanized Fibre, and Materials Used In Printed Wiring Boards, UL 746E

Seventh Edition, Dated September 14, 2020

Summary of Topics:

This revision of ANSI/UL 746E dated January 27, 2022 includes the following changes:

Clarification of Conformal Coating in Figure 22.1; 22.2.1

Text that has been changed in any manner or impacted by UL's electronic publishing system is marked with a vertical line in the margin.

The revised requirements are substantially in accordance with Proposal(s) on this subject dated November 19, 2021.

All rights reserved. No part of this publication may be reproduced, stored in a retrieval system, or transmitted in any form by any means, electronic, mechanical photocopying, recording, or otherwise without prior permission of UL.

UL provides this Standard "as is" without warranty of any kind, either expressed or implied, including but not limited to, the implied warranties of merchantability or fitness for any purpose.

In no event will UL be liable for any special, incidental, consequential, indirect or similar damages, including loss of profits, lost savings, loss of data, or any other damages arising out of the use of or the inability to use this Standard, even if UL or an authorized UL representative has been advised of the possibility of such damage. In no event shall UL's liability for any damage ever exceed the price paid for this Standard, regardless of the form of the claim.

Users of the electronic versions of UL's Standards for Safety agree to defend, indemnify, and hold UL harmless from and against any loss, expense, liability, damage, claim, or judgment (including reasonable attorney's fees) resulting from any error or deviation introduced while purchaser is storing an electronic Standard on the purchaser's computer system.

Documents
Document Sharing Hub

Full document details: UL 746E 2022

No Text on This Page

Documents
Document Sharing Hub

Full document details: UL 746E 2022

SEPTEMBER 14, 2020
(Title Page Reprinted: January 27, 2022)

ANSI/UL 746E-2022

UL 746E

Standard for Polymeric Materials – Industrial Laminates, Filament Wound Tubing, Vulcanized Fibre, and Materials Used In Printed Wiring Boards

First Edition – November, 1985
Second Edition – February, 1994
Third Edition – June, 2000
Fourth Edition – April, 2006
Fifth Edition – April, 2010
Sixth Edition – August, 2016

Seventh Edition

September 14, 2020

This ANSI/UL Standard for Safety consists of the Seventh Edition including revisions through January 27, 2022.

The most recent designation of ANSI/UL 746E as an American National Standard (ANSI) occurred on January 21, 2022. ANSI approval for a standard does not include the Cover Page, Transmittal Pages, and Title Page. Any other portions of this ANSI/UL standard that were not processed in accordance with ANSI/UL requirements are noted at the beginning of the impacted sections.

Comments or proposals for revisions on any part of the Standard may be submitted to UL at any time. Proposals should be submitted via a Proposal Request in UL's On-Line Collaborative Standards Development System (CSDS) at https://csds.ul.com.

UL's Standards for Safety are copyrighted by UL. Neither a printed nor electronic copy of a Standard should be altered in any way. All of UL's Standards and all copyrights, ownerships, and rights regarding those Standards shall remain the sole and exclusive property of UL.

COPYRIGHT © 2022 UNDERWRITERS LABORATORIES INC.

Documents
Document Sharing Hub

Full document details: UL 746E 2022

No Text on This Page

Documents
Document Sharing Hub

Full document details: UL 746E 2022

CONTENTS

INTRODUCTION

1 Scope 5
2 Glossary 5
3 Units of Measurement 12
4 Measurement Accuracy and Testing Conditions 12
5 Supplementary Test Procedures 12
6 References 13

INDUSTRIAL LAMINATES

7 General 14
8 Abbreviated Test Program 31
9 Full Test Program 35
10 Ultrathin Laminate and Prepreg Test Program 41
10.1 General 41
10.2 UL/ANSI ultrathin laminates and prepreg 42
10.3 Non-UL/ANSI ultrathin laminate and prepreg test program 47
10.4 Intermixing of materials that are not generically identical 48
11 Non-reinforced Dielectric Materials and Other Materials Requiring Mechanical Support 48
11.1 General 48
11.2 Thermal aging 49
11.3 Performance profile indexing 56
11.4 Metal clad test program 59
11.5 Test programs for revising dielectric material parameters 62
12 Metal-Based Laminates 64
12.1 General 64
12.2 Performance profile characteristics 65
12.3 Thermal aging 69
12.4 Metal clad metal base laminates 72
13 Metal Clad Flexible Film 72

VULCANIZED FIBRE

14 General 72
15 Vulcanized Fibre Test Program 73

FILAMENT WOUND TUBING

16 General 74
17 Filament Wound Tubing Test Program 77

METAL CLAD LAMINATES, METAL CLAD FLEXIBLE FILM, AND PREFABRICATED MULTILAYERED LAMINATES

18 General 78
19 Metal Clad Laminates 78
19.1 General 78
19.2 Single layer sample construction 81
19.3 Multi-layer sample construction 81
19.4 Data collection 94
19.5 Microsection analysis 95

AVA Documents
Document Sharing Hub
Full document details: UL 746E 2022

19.6 Thermal stress 96
19.7 Bond strength delamination and blistering test 98
19.8 Delamination and blistering 99
19.9 Dissimilar dielectric materials thermal cycling test 99
19.10 Flammability test 100
19.11 Adhesives for bonding conductors 100
20 Prefabricated Multilayered Laminates – Mass Lamination 101
20.1 General 101
20.2 Product limitations 101
20.3 Test samples 102
20.4 Processes 102

PERMANENT COATINGS

21 Permanent Coatings 102
21.1 General 102
21.2 Test samples 102
21.3 Thermal stress 104
21.4 Flammability test 104
22 Conformal Coatings 104
22.1 General 104
22.2 Test samples 105
22.3 Sample conditioning 108
22.4 Voltage transient test 111
22.5 Dielectric withstand voltage and breakdown voltage test 111
22.6 Abrasion resistance test 111

MARKING

23 Details 113

SUPPLEMENT SA – FOLLOW-UP INSPECTION

SA1 Scope 115
SA2 Glossary 115
SA3 Responsibility of the Manufacturer 116
SA4 Responsibility of the Field Representative 116
SA5 Selection of Samples for Follow-Up Testing 117
SA6 Follow-Up Test Program 117

ANNEX A Typical IR Spectrums

A1 General 118

ANNEX B End-of-life Conditioning of Industrial Laminates

B1 General 144

Documents
Document Sharing Hub
Full document details: UL 746E 2022

INTRODUCTION

1 Scope

1.1 These requirements cover test procedures to be used for the evaluation of industrial laminates, filament wound tubing, vulcanized fibre, and materials for use in fabricating printed wiring boards.

1.2 These requirements provide data with respect to the physical, electrical, flammability, thermal, and other properties of the materials, that are intended to provide guidance to the material manufacturer, the fabricator, the end product manufacturer, safety engineers and other interested parties.

2 Glossary

2.1 For the purpose of this standard the following definitions apply.

2.2 ADHESIVE – A gelatinous substance such as glue or cement used to join, bond, or fasten materials or objects together.

2.3 ANISOTROPIC – A material having different values for properties, such as conductivity, depending on the direction or dimension within the material.

2.4 AS RECEIVED – Samples in an unconditioned state, prior to being subject to conditioning, or without a history of conditioning.

2.5 ASSEMBLY SOLDERING PROCESS – The process used for soldering components to a printed wiring board during the assembly process. The soldering process may include, but is not limited to, reflow, wave, selective soldering, or other equivalent soldering techniques.

2.6 BASE MATERIAL – An organic or inorganic insulating material used to support a pattern of conductor material. The base material may be rigid or flexible.

2.7 BASE MATERIAL THICKNESS – The thickness of the base dielectric material excluding conductive foil or material deposited on the surface of the base material. If an adhesive is used to adhere the conductor material to the base material, the adhesive thickness and application surfaces (base material sides) are indicated separately.

2.8 BIAS CUT – Samples cut crosswise to the surface of the material. See Figure 7.1.

2.9 BONDING LAYER – An adhesive layer used to bond discrete layers of multilayer laminate constructions. Also known as prepreg.

2.10 BUILD-UP THICKNESS – Overall thickness of a combination of materials. Unless otherwise indicated, the build-up thickness will refer to the overall thickness of a laminate construction where no internal or external conductor material resides.

2.11 CAP LAYER – A single sided copper clad laminate bonded to the external surface of the multilayer board with bonding layer material (prepreg or b-stage material).

2.12 CIRCUIT – Electrical devices and elements interconnected to perform a desired electrical function.

2.13 CIRCUITRY LAYER – Conductor layer or plane in or on a printed wiring board.

2.14 CLAD MATERIAL – See Metal Clad Base Material.

Documents
Document Sharing Hub
Full document details: UL 746E 2022

2.15 COATING – A non-metallic substance applied by some process, such as dipping, curtain coating, film laminating, screening, spraying, or melt-flow.

2.16 CONDITIONING – Exposure of test samples to an environment for a period of time, prior to or after testing and prior to evaluation.

2.17 CONDUCTIVE (ELECTRICAL) – The ability of a substance or material to conduct electricity.

2.18 CONDUCTIVE FOIL – A thin metal sheet intended for forming a conductor pattern on a base material.

2.19 CONDUCTOR – A trace or path for electricity to transmit in a conductor pattern.

2.20 CONDUCTOR ADHESIVE – Adhesive material used to attach conductor material to a base material.

2.21 CONDUCTOR AVERAGE TRACE WIDTH – The average width of a length of conductor trace.

2.22 CONDUCTOR BASE WIDTH – The width of a conductor at the interface of the conductor material as determined by microsection analysis. This width is used to determine bond strength/peel strength values.

2.23 CONDUCTOR LAYER – A single plane of a conductor material or pattern on a base material.

2.24 CONDUCTOR MATERIAL – An organic or inorganic substance capable of transmitting electricity, used for circuit conductors, including but not limited to copper, tin, nickel, gold, carbon paste, copper paste, silver paste, ruthenium oxide paste, etc.

2.25 CONDUCTOR PATTERN – The path, design, or configuration of conductor material on the base material, including but not limited to conductor traces, lands, through-holes, and vias.

2.26 CONDUCTOR THICKNESS – The thickness of the conductor and additional metallic platings or coatings, excluding non-conductive coatings.

2.27 CONDUCTOR TRACE – A linear conductor path of a conductor circuit.

2.28 CONDUCTOR WEIGHT – See Conductor Thickness.

2.29 CONDUCTOR WIDTH – The width of the conductor as viewed from a top view or at the plane of the surface of a base material, whichever is less. See Conductor Base Width.

2.30 CONFORMAL COATING – A protective covering applied on a printed wiring board capable of conforming to the configuration of objects coated, used to increase the dielectric voltage-withstand capability between conductors and/or to protect against environmental conditions.

2.31 CONTINUITY – An uninterrupted path for the flow of electrical current in a circuit.

2.32 CONSTRUCTION – A variation in laminate materials, including but not limited to base material, laminate, prepreg, dielectric materials, or other insulation materials. Variations include singlelayer, multilayer, and composite constructions.

2.33 CORE MATERIAL – The innermost material or base material which may be used to support a subsequent layer or layers of dielectric material and conductor pattern. Core material may be an organic or

AVA Documents
Document Sharing Hub

Full document details: UL 746E 2022

inorganic material, with or without integral dielectric material. Core material may be referred to as substrate material.

2.34 COUPON – A test vehicle constructed to represent a production material to be used for testing. See Sample.

2.34A CURING AGENT – A component added at the A-Stage to facilitate or increase the rate of curing of a thermosetting resin. Commonly known as a crosslinking agent.

2.35 CURRENT – The flow or movement of electrons in a conductor as a result of voltage difference between the ends of the conductive path.

2.36 DECLAD – A dielectric material from which the foil or conductive material has been removed by etching or other means.

2.37 DELAMINATION – A planar separation of materials (i.e., separation between conductor and base material, prepreg, dielectric material, etc.).

2.38 DESICCATOR – A sealable vessel containing anhydrous calcium chloride, or other drying agent, maintained at a relative humidity not exceeding 20 percent at 23 ±2°C (73.4 ±3.6°F).

2.39 DIELECTRIC – A material capable of high resistance to the flow of electrical current and capable of being polarized by electric field.

2.40 DOUBLESIDED – A singlelayer board construction with conductor pattern on the two external sides of the base material only. Sometimes referred to as di-clad.

2.41 END PRODUCT – An individual part or assembly in its final completed state. See End-Use Product.

2.42 END-USE PRODUCT – A device or appliance in which a printed wiring board is installed as a component.

2.42A EPOXY – A class of thermosetting polymers derived from an epoxide resin.

2.43 ETCHANT – A chemically reactive solution used to remove portions or all material from a base material construction.

2.44 ETCHED – A laminate material in which the conductive layer has been removed by a chemical process.

2.45 ETCHING – The action of chemical, or chemical and electrolytic, removal of conductive or resistive material.

2.46 EXTERNAL LAYER – The conductor pattern on the external surface of the board construction.

2.47 FAMILY – Multiple grades of materials that have identical IR spectra and performance characteristics are UL Recognized for the manufacturer as a material family (alternate grades separated by a comma) of which one grade is representative of others in the family.

2.48 FILAMENT WOUND TUBING – A tube composed of continuous monofilaments or yarns with controlled orientation in a matrix of cured thermosetting resin.

Documents
Document Sharing Hub

Full document details: UL 746E 2022

2.48A FILLER, INORGANIC – An inorganic material added at the A-Stage which does not react chemically to form part of the polymer.

2.48B FILLER, ORGANIC – An organic material added at the A-Stage which does not react chemically to form part of the polymer.

2.49 FILM – A sheet material having a nominal thickness not greater than 0.25 mm (0.010 inch).

2.49A FLAME RETARDANTS – Substances that inhibit or suppress the combustion process when added to combustible materials. Flame retardants can be Reactive (i.e. chemically bound to the combustible material) or Additive (i.e. not chemically bound or reacted with the combustible material but are dispersed evenly throughout).

2.50 FLAMMABILITY ONLY RECOGNITION – A material intended for use where the construction shall be evaluated for a flammability classification only, and the thermal, mechanical, and electrical capacity of the material is not of concern and only the flammability classification of the resulting printed wiring board is of concern in the end-use product.

2.51 FOIL LAMINATION – A process for bonding a conductive foil to a dielectric base material.

2.52 GRADE – A designation arbitrarily assigned to a material by the fabricator.

2.53 INDUSTRIAL LAMINATE – Insulating material consisting of reinforcement impregnated or coated with resin and laminated under pressure and high temperature with or without vacuum assist. The resin may contain filler and additives. The reinforcement may be fibrous material such as cellulose paper, cotton, woven aramid, nonwoven aramid, woven glass, random laid glass mat or other fibers and films. The insulating material may or may not contain reinforcement material. See Base Material.

2.54 INTERNAL LAYER – A conductor pattern contained entirely within a multilayer board construction.

2.55 LAMINATE – The product of bonding two or more layers of material.

2.56 LAMINATE THICKNESS – The thickness of the dielectric material in a singlesided or doublesided singlelayer metal-clad base material.

2.57 LAYER-TO-LAYER SPACING – The thickness of dielectric material between adjacent conductor planes (i.e., the physical distance between adjacent conductor planes).

2.58 MACHINE CUT – Samples cut lengthwise to the surface of the material. See Figure 7.1. Also known as warp direction cut.

2.59 MASS LAMINATE – An assembly of base material layers (laminate) and bonding layers (prepreg) laminated together, and which is performed by a base material manufacturer or any other source outside the printed wiring board fabricator's facility. Mass laminating is performed in several ways. Two examples are:

a) The manufacturer of the base material receives the inner layers etched by the printed wiring board fabricator and, with a bonding layer supplied by the printed wiring board fabricator or from his own stock, laminates the boards with a solid metal sheet on the external surfaces.

b) The manufacturer of the base material receives art work from the printed wiring board fabricator or generates his own art work to prepare the inner layers, etches the inner layers of his own in-house base material, and with a bonding layer laminates the boards with a solid metal sheet on the external surfaces.

AVA Documents
Document Sharing Hub
Full document details: UL 746E 2022

After either of the above procedures, the laminator returns to the printed wiring board fabricator a composite of internal layers and solid metal external layers for final etching of external surfaces and/or plating operations.

2.60 MAXIMUM OPERATING TEMPERATURE (MOT) – The maximum operating temperature is the maximum continuous use temperature that the laminate in a board construction may be exposed to under normal operating conditions.

2.60A MELAMINE – A class of melamine–formaldehyde thermosetting polymers which are the product of the reaction of melamine, which is a trimer of cyanamide, and formaldehyde.

2.61 METAL BASE LAMINATE – A metal core used as the support for a dielectric insulating material or base material applied to one or both sides of the metal core surface.

2.62 METAL CLAD BASE MATERIAL – Base material with metal conductor material on one or both sides, with or without adhesive.

2.63 METAL CLAD LAMINATE – See Metal Clad Base Laminate.

2.64 METAL CORE LAMINATE – See Metal Base Laminate.

2.65 METAL WEIGHT – See Conductor Weight.

2.66 MINIMUM CONDUCTOR WIDTH – The minimum width conductor present on the sample or production printed wiring board. See Conductor Base Width.

2.67 MULTILAYER – Consists of alternate layers of conductors and base materials laminated or bonded together, including at least one internal conductive layer.

2.68 PATTERN – The configuration of conductive and nonconductive materials on a base dielectric material.

2.69 PERFORMANCE LEVEL CATEGORIES (PLC) – An integer defining a range of test values for a given electrical or mechanical property test.

2.70 PERMANENT COATING – See Permanent Materials.

2.71 PERMANENT MATERIALS – Materials intended to be a part of the board, for the life of the product.

2.72 PERMANENT RESIST – A solder resist or mask material intended to be a part of the board, for the life of the product.

2.72A PHENOLIC – A class of phenol–formaldehyde thermosetting polymers which are the product of the reaction of phenol and formaldehyde. The earliest synthetic polymers to be manufactured.

2.72B PIGMENT – A material added at the A-Stage for the purpose of changing the color from natural in the C-Stage product.

2.72C POLYESTER – A class of thermosetting polymers typically prepared by the esterification of a polyfunctional alcohol with a difunctional organic acid.

2.72D POLYIMIDE – A class of thermosetting polymers formed of imide monomers.

Documents
Document Sharing Hub
Full document details: UL 746E 2022

2.73 PREPREG – Fibrous reinforcement material impregnated or coated with a thermosetting resin binder, and consolidated and cured to an intermediate stage semi-solid product (B-stage resin).

2.74 PRINTED BOARD – See printed circuit board and printed wiring board.

2.75 PRINTED (CIRCUIT) BOARD – A printed board produced from rigid industrial laminate material that provides point-to-point connections and printed components in a predetermined arrangement. See printed wiring board and printed board.

2.76 PRINTED WIRING BOARD – A completely processed combination of a printed wiring pattern, including printed components, and the base material. See printed circuit board and printed board.

2.77 REINFORCEMENT MATERIAL – Any material (i.e. fibrous, continuous, sheet, etc.) capable of enhancing the base material mechanical or physical performance.

2.78 RELATIVE THERMAL INDEX (RTI) – Maximum service temperature for a material, where a class of critical properties will not be unacceptably compromised through chemical thermal degradation, over the reasonable life of an electrical product, relative to a reference material having a confirmed, acceptable corresponding performance-defined RTI.

2.78A RESIN, A-STAGE – The first stage in the production of a thermosetting polymer in which a soluble and fusible prepolymer is formed. Commonly known as a varnish.

2.78B RESIN, B-STAGE – The second stage in the production of a thermosetting polymer where it is partially branched and crosslinked. However, network formation is not so advanced that the material is completely insoluble and infusible. Commonly known as prepreg when combined with a reinforcement.

2.78C RESIN, C-STAGE – The final stage in the production of a thermosetting polymer so that it has a sufficiently high crosslinking density to render it completely insoluble and infusible. Commonly known as a laminate when combined with a reinforcement.

2.79 RESIN COATED COPPER FOIL (RCF) – Metal foil coated with unreinforced resin using a single- (one pass) or double- (two pass) coated system. Single-coated foils are usually coated with one layer of B-stage resin. Double-coated foils are usually coated with two layers of resin; C-stage resin adjacent to the foil and B-stage resin on the surface of the C-stage resin.

2.79A RESIN, EPOXIDE – A resin formed from a prepolymer present in the A-Stage which incorporates the characteristic oxirane three-membered heterocycle of two carbon atoms and one oxygen atom.

2.79B RESIN, PRIMARY – The original resin type in the A-Stage before it was crosslinked into a polymer network that represented the greatest weight percent of resins in the A-Stage.

2.79C RESIN, SECONDARY – A resin added at the A-Stage of greater than 3 weight percent which may or may not chemically react with the primary resin and which does not form part of the curing or flame-retardant system.

2.79D RESIN SYSTEM – The resin system of a composite material comprises the resin matrix that binds and transfers mechanical load through the reinforcement to the rest of the structure.

2.79E RESIN, THERMOSETTING – A polymer that may be crosslinked by the application of heat and/or a suitable curing agent to form a thermoset polymer. Once crosslinked a thermosetting resin cannot be significantly re-softened or re-shaped by reheating. Thermoset polymers are commonly produced by lamination, compression or transfer molding.

AVA Documents
Document Sharing Hub

Full document details: UL 746E 2022

2.79F RESIN, THERMOPLASTIC –A plastic material that significantly softens on heating and hardens on cooling in a process that may be repeated many times. Thermoplastic materials are commonly produced and distributed in the form of pellets or powder, and shaped into the final product form by melting, pressing, or injection molding.

2.80 RESIST COATING – Material supplied in liquid or film form to mask or to protect selected areas of a pattern from the action of an etchant, solder or plating, which remains on the printed wiring board after processing.

2.81 RIGID INDUSTRIAL LAMINATE – Fibrous reinforcing material that is impregnated or coated with a thermosetting resin or thermoplastic resin binder and consolidated under high temperature and pressure into dense solid product.

2.82 RIGID PRINTED WIRING BOARD – A printed wiring board produced using rigid base dielectric materials.

2.83 SAMPLE – A test vehicle which may be a production material, or a portion there of, or a coupon.

2.83A SILICONE – A class of three-dimensional polymerized siloxane thermosetting polymers formed by the crosslinking of highly branched silicone precursors.

2.84 SINGLELAYER – Singlelayer board constructions are doublesided constructions with one layer of dielectric materials(s) separating the conductor planes, and singlesided constructions with a single conductor plane on one side of a dielectric materials(s).

2.85 SINGLE-SIDED – A board with conductor pattern on one side of the dielectric material(s).

2.86 SOLDER MASK – See Solder Resist.

2.87 SOLDER RESIST – A coating material intended to prevent deposition of solder upon selected areas during solder operations.

2.88 SPUTTERING – The ejection of atoms caused by ion bombardment of a target material in a plasma environment and the subsequent deposition of ejected atoms onto the surface of the substrate.

2.89 SUBSTRATE – See Core Material.

2.90 TEMPERATURE PROFILE – The temperatures a select point traverses as it passes through a process involving multiple temperatures and dwell times.

2.91 TEST PATTERN – The conductor pattern intended for test and inspection purposes.

2.92 TRANSVERSE CUT – Samples cut normal to the surface of the material. See Figure 7.1. Also known as fill direction cut.

2.93 UL/ANSI TYPE MATERIAL – A specific type designation for materials defined in this standard as having certain base material, resin, thermal index and profiles of minimum performance.

2.94 UNCLAD – A dielectric or laminate material without foil or conductive material (never copper clad).

2.95 VULCANIZED FIBRE – A dense material of partially regenerated cellulose in which the fibrous sheet structure is retained in varying degrees, depending on the grade of fibre.

AVA Documents
Document Sharing Hub

Full document details: UL 746E 2022

2.96 X-AXIS – A reference axis, usually horizontal or left-to-right direction in a two dimension coordinate system.

2.97 Y-AXIS – A reference axis, usually vertical or bottom-to-top direction in a two dimension coordinate system. The x and y axis are usually perpendicular to one another, in a two or three dimension coordinate system.

2.98 Z-AXIS – The axis perpendicular to the plane created by the x and y reference axis. This axis usually refers to the thickness of a laminate construction.

3 Units of Measurement

3.1 Values stated without parentheses are the requirement. Values in parentheses are explanatory or approximate information.

4 Measurement Accuracy and Testing Conditions

4.1 A measuring device used to perform the tests required by this Standard, shall be capable of measuring the specified parameter with an accuracy within 10 percent of the measured parameter.

4.2 Prior to all tests, subject all samples to a stabilization period in accordance with the Standard Practice for Conditioning Plastics for Testing, ASTM D618, and the Standard for Plastics – Standard Atmospheres for Conditioning and Testing, ISO 291, for a minimum of 40 hours at 23 ±2°C (73.4 ±3.6°F) and 50 ±10 percent RH, unless specified otherwise in the individual test method.

4.3 During the test, the standard atmospheric conditions surrounding the sample shall be 25°C ±10°C (77°F ±18°F) and 50 ±10 percent relative humidity, unless otherwise specified in the individual test method.

4.4 Flammability samples shall be preconditioned as described in the Standard for Tests for Flammability of Plastic Materials for Parts in Devices and Appliances, UL 94. As an alternative to the 70°C for 168 hours preconditioning, industrial laminate and solder resist materials shall be preconditioned using the alternate conditions of 125 ±2°C for 24 ±1 hours, unless otherwise specified.

4.5 Once samples are removed from the thermal or humidity pre-conditioning environment, samples shall be tested within 30 minutes or the specified time period.

5 Supplementary Test Procedures

5.1 These requirements are intended to be used in conjunction with the following requirements or standards:

a) The Standard for Polymeric Materials – Short Term Property Evaluations, UL 746A, the Standard for Polymeric Materials – Long Term Property Evaluations, UL 746B, the Standard for Polymeric Materials – Use in Electrical Equipment Evaluations, UL 746C, and the Standard for Polymeric Materials – Flexible Dielectric Film Materials for use in Printed Wiring Boards and Flexible Materials Interconnect Constructions, UL 746F, contain programs for investigating polymeric materials. UL 746C is intended for the evaluations of polymeric materials in specific applications in end products.

b) The Standard for Tests for Flammability of Plastic Materials for Parts in Devices and Appliances, UL 94, contains methods for evaluating the flammability of polymeric materials that are intended to be used in electrical equipment.

Documents
Document Sharing Hub
Full document details: UL 746E 2022

c) The Standard for Printed Wiring Boards, UL 796, covers the minimum performance requirements for printed wiring boards.

d) The Standard for Flexible Materials Interconnect Constructions, UL 796F, contains the minimum performance requirements for flexible printed wiring boards and interconnect constructions.

6 References

6.1 Any undated reference to a code or standard appearing in the requirements of this standard shall be interpreted as referring to the latest edition of that code or standard.

6.2 The following publications are referenced in this standard:

ASTM D 149 – Standard Test Method for Dielectric Breakdown Voltage and Dielectric Strength of Solid Electrical Insulating Materials at Commercial Power Frequencies.

ASTM D 257 – Standard Methods of Test for DC Resistance or Conductance of Insulating Materials.

ASTM D 348 – Standard Test Methods for Rigid Tubes Used for Electrical Insulation.

ASTM D 374 – Standard Test Methods for Thickness of Solid Electrical Insulation..

ASTM D 495 – Standard Test Method for High-Voltage, Low-Current, Dry Arc Resistance of Solid Electrical Insulation.

ASTM D 570 – Standard Test Method of Test for Water Absorption of Plastics.

ASTM D 618 – Standard Practice for Conditioning Plastics for Testing.

ASTM D 619 – Standard Test Methods for Vulcanized Fibre Used for Electrical Insulation.

ASTM D 790 – Standard Test Methods for Flexural Properties of Unreinforced and Reinforced Plastics and Electrical Insulating Materials..

ASTM D 882 – Standard Test Methods for Tensile Properties of Thin Plastic Sheeting.

ASTM D 1000 – Standard Test Method for Pressure-Sensitive Adhesive-Coated Tapes Used for Electrical and Electronic Applications.

ASTM D 3850 – Standard Test Method for Rapid Thermal Degradation of Solid Electrical Insulating Materials by Thermogravimetric Method (TGA).

ASTM D 5423 – Standard Specification for Forced-Convection Laboratory Ovens for Evaluation of Electrical Insulation.

ASTM E 3 – Standard Guide for Preparation of Metallographic Specimens.

IEC 61189-2 – Test methods for electrical materials, printed boards and other interconnection structures as assemblies – Part 2: Test methods for materials for interconnection structures.

IEC 62321-3-2 – Determination of certain substances in electrotechnical products – Part 3-2: Screening – Flourine, chlorine and bromine in polymers and electronics by Combustion – Ion Chromatography (C-IC).

IPC-4101 – Specification for Base Materials for Rigid and Multilayer Printed Boards

IPC TM-650 2.1.1 – Microsectioning Manual and Semi or Automatic Method.

Documents
Document Sharing Hub
Full document details: UL 746E 2022

ISO 291 – Plastics – Standard Atmospheres for Conditioning and Testing.

INDUSTRIAL LAMINATES

7 General

7.1 The dielectric material test programs are divided into parts, as shown in Table 7.1 to determine the physical, electrical, flammability, thermal and other performance property characteristics based on the material construction and specific application.

Table 7.1
Description of Application-Specific Test Programs in UL 746E

Section	Program	Description
8	UL/ANSI abbreviated evaluation	Test program for laminates with comparable characteristics to the UL/ANSI type materials qualify for reduced testing
9	UL/ANSI or Non-ANSI full evaluation	Test program for full characterization of the material performance
10	UL/ANSI or Non-ANSI ultrathin materials and Prepreg Test Program	Test program for characterization of thin material.
11	Non-reinforced materials and other materials requiring mechanical support	Test program for characterization of non-reinforced materials requiring mechanical support
12	Metal base laminates	Test program for characterization of metal base laminate / composite material
13	Flexible film constructions	See UL 746F for Flexible Material investigations
19	Metal clad laminates	Test program for characterization of metal clad material
20	Metal clad mass laminated multilayer laminates	Test program for characterization of prefabricated multilayer laminate

7.1A The material constituent component details shall be provided by the supplier. The constituent details shall include, but are not limited to: Curing Agent, Flame Retardant, Inorganic Filler, Organic Filler, Pigment, Primary Resin, Reinforcement and Secondary Resin.

7.2 Profiles of minimum performance, relative thermal indices, and major constituents of industrial laminates are given in Table 7.2 – Table 7.4. These profiles are minimum characteristics required for an industrial laminate to be assigned a UL/ANSI type designation.

Documents
Document Sharing Hub
Full document details: UL 746E 2022

Table 7.2
Rigid Industrial Laminate Profiles of Performance

UL/ANSI Type	Min thickness		Flam class	Min HAI (Arc)		Min HWI (Sec)	Max HVAR (Sec)	Max HVTR (in/min)	D 495 Sec	Min DS	Min FS	CTI (V)	VR ohm-cm x10[a]	WA %Chg
	mm	inch		OS	AS	PLC	PLC	PLC		kV/mm	MPa (psi)	PLC		
X	0.71	0.028	HB	(24)	(200)	(6)	(300)	(11.7)	–	–	151.7	–	–	–
				3	0	5	0	4			(22,000)			
	1.45	0.057	HB	(24)	(200)	(8)	(300)	(9.6)	5	9.6/–	172.4	–	–	–
				3	0	4	0	4			(25,000)			
XP	0.71	0.028	–	(10)	(200)	(7)	(300)	(8.4)	–	26.9/–	82.7	–	–	–
				4	0	4	0	4			(12,000)			
	1.45	0.57	HB	(19)	(145)	(7)	(300)	(8.0)	–	19.4/–	89.6	–	–	–
				3	0	4	0	4			(13,000)			
XPC	0.71	0.028	HB	(10)	(200)	(7)	(15)	(10.0)	–	–	–	–	–	–
				4	0	4	3	4						
	1.45	0.057	HB	(16)	(200)	(8)	(300)	(10.8)	6	21.8/–	68.9	–	–	–
				3	0	4	0	4			(10,000)			
XX	0.71	0.028	HB	(8)	(200)	(6)	(300)	(11.0)	–	29.9/–	103.4	–	–	–
				4	0	5	0	4			(15,000)			
	1.45	0.057	HB	(12)	(200)	(7)	(300)	(15.4)	–	19.5/–	103.4	–	–	–
				4	0	4	0	4			(15,000)			
XXP	0.71	0.028	HB	(11)	(200)	(5)	(300)	(12.1)	–	–	96.5	–	–	–
				4	0	5	0	4			(14,000)			
	1.45	0.057	HB	(15)	(200)	(7)	(300)	(22.0)	5	15.7/–	96.5	–	–	–
				3	0	4	0	4			(14,000)			
XXX	0.71	0.028	–	(10)	(200)	(8)	(300)	(13.3)	–	–	93.1	–	–	–

Table 7.2 Continued on Next Page

AVA Documents Document Sharing Hub

Full document details: UL 746E 2022

Table 7.2 Continued

UL/ANSI Type	Min thickness		Flam class	Min HAI (Arc)		Min HWI (Sec)	Max HVAR (Sec)	Max HVTR (in/min)	D 495 Sec	Min DS	Min FS	CTI (V)	VR ohm-cm x10[a]	WA %Chg
	mm	inch		OS	AS	PLC	PLC	PLC		kV/mm	MPa (psi)	PLC		
				4	0	4	0	4			(13,500)			
	1.45	0.057	HB	(11)	(200)	(10)	(300)	(12.1)	4	–	93.1	–	–	–
				4	0	4	0	4			(13,500)			
XXXP	0.71	0.028	HB	(18)	(200)	(6)	(300)	(7.5)	–	38.4/18.6	82.7	–	–	–
				3	0	5	0	4			(12,000)			
	1.45	0.057	HB	(17)	(200)	(8)	(300)	(11.3)	6	–	82.7	(100)	–	–
				3	0	4	0	4			(12,000)	4		
XXXPC	0.71	0.028	HB	(11)	(128)	(5)	(300)	(13.0)	–	–	82.7	–	–	–
				4	0	5	0	4			(12,000)			
	1.45	0.057	HB	(19)	(200)	(6)	(300)	(11.6)	–	–	82.7	(100)	7,5	–
				3	0	5	0	4			(12,000)	4		
C	0.63	0.025	–	(7)	(200)	(8)	(300)	(11.7)	–	–	117.2	–	–	–
				4	0	4	0	4			(17,000)			
	1.40	0.055	HB	(7)	(200)	(9)	(300)	(10.6)	4	8.9/–	117.2	–	–	–
				4	0	4	0	4			(17,000)			
CE	0.63	0.025	–	(7)	(200)	(9)	(300)	(15.0)	–	18.3/–	113.8	–	–	–
				4	0	4	0	4			(16,500)			
	1.40	0.055	HB	(6)	(200)	(9)	(300)	(14.3)	6	15.9/–	113.8	–	–	–
				4	0	4	0	4			(16,500)			
L	0.63	0.025	–	(10)	(200)	(5)	(300)	(14.0)	–	–	113.8	–	–	–
				4	0	5	0	4			(16,500)			

Table 7.2 Continued on Next Page

Documents
Document Sharing Hub
Full document details: UL 746E 2022

Table 7.2 Continued

UL/ANSI Type	Min thickness		Flam class	Min HAI (Arc)		Min HWI (Sec)	Max HVAR (Sec)	Max HVTR (in/min)	D 495 Sec	Min DS	Min FS	CTI (V)	VR ohm-cm x10[a]	WA %Chg
	mm	inch		OS	AS	PLC	PLC	PLC		kV/mm	MPa (psi)	PLC		
	1.45	0.057	HB	(11)	(200)	(6)	(300)	(15.0)	4	7.3/–	113.8	–	–	–
				4	0	5	0	4			(16,500)			
LE	0.63	0.025	–	(10)	(200)	(7)	(300)	(15.7)	–	–	110.3	–	–	–
				4	0	4	0	4			(16,000)			
	1.45	0.057	HB	(6)	(200)	(9)	(300)	(17.2)	4	11.0/–	110.3	–	–	–
				4	0	4	0	4			(16,000)			
G-3	0.63	0.025	HB	(6)	(200)	(9)	(300)	(12.0)	–	30.6/–	124.1	–	–	–
				4	0	4	0	4			(18,000)			
	1.40	0.055	HB	(6)	(200)	(17)	(300)	(24.0)	–	16.3/–	137.9	–	–	–
				4	0	3	0	4			(20,000)			
G-5	0.63	0.025	V-0	(24)	(200)	(11)	(300)	(0.2)	–	–	379.1	–	–	–
				3	0	4	0	0			(55,000)			
	1.40	0.055	V-0	(57)	(200)	(18)	(300)	(0.2)	6	28.0/–	344.7	–	–	–
				2	0	3	0	0			(50,000)			
G-7	0.63	0.025	V-0	(6)	(200)	(15)	(300)	(0.1)	–	14.8/–	68.9	–	–	–
				4	0	3	0	0			(10,000)			
	1.40	0.055	V-0	(6)	(200)	(11)	(300)	(0.1)	–	7.7/–	137.9	–	–	–
				4	0	4	0	0			(20,000)			
G-9	0.63	0.025	V-0	(53)	(200)	(6)	(300)	(11.7)	–	23.2/–	–	–	–	–
				2	0	5	0	4						
	1.40	0.055	V-0	(83)	(200)	(20)	(300)	(0.2)	–	25.2/–	413.7	–	–	–
				1	0	3	0	0			(60,000)			

Table 7.2 Continued on Next Page

Documents
Document Sharing Hub
Full document details: UL 746E 2022

Table 7.2 Continued

UL/ANSI Type	Min thickness		Flam class	Min HAI (Arc)		Min HWI (Sec)	Max HVAR (Sec)	Max HVTR (in/min)	D 495 Sec	Min DS	Min FS	CTI (V)	VR ohm-cm x10[a]	WA %Chg
	mm	inch		OS	AS	PLC	PLC	PLC		kV/mm	MPa (psi)	PLC		
G-10	0.63	0.025	HB	(39)	(200)	(9)	(300)	(0.8)	–	32.0/29.8	413.7	–	–	–
				2	0	4	0	0			(60,000)			
	1.40	0.055	HB	(42)	(200)	(12)	(300)	(0.8)	3	–	413.7	(100)	9,9	0.20
				2	0	4	0	0			(60,000)	4		
G-11	0.63	0.025	HB	(5)	(114)	(9)	(300)	(19.0)	–	39.0/–	413.7	–	–	–
				4	1	4	0	4			(60,000)			
	1.40	0.055	HB	(7)	(200)	(17)	(300)	(12.0)	–	34.1/–	413.7	–	–	–
				4	0	3	0	4			(60,000)			
FR-1	0.71	0.028	V-1, V-0	(17)	(200)	(15)	(300)	(7.0)	–	–	–	–	–	–
				3	0	3	0	4						
	1.45	0.057	V-1, V-0	(18)	(200)	(15)	(300)	(7.0)	126	19.7/15.7	68.9	(100)	9,7	–
				3	0	3	0	4			(10,000)	4		
FR-2	0.71	0.028	V-1, V-0	(17)	(200)	(8)	(300)	(14.5)	–	32.6/23.0	82.7	–	–	–
				3	0	4	0	4			(12,000)			
	1.45	0.057	V-1, V-0	(18)	(200)	(9)	(300)	(10.5)	93	–	82.7	4	7,6	–
				3	0	4	0	4			(12,000)			
FR-3	0.71	0.028	V-1, V-0	(124)	(200)	(59)	(300)	(17.5)	–	31.2/26.1	137.9	–	–	–
				0	0	2	0	4			(20,000)			
	1.45	0.057	V-1, V-0	(200)	(200)	(133)	(300)	(35.0)	–	–	137.9	(100)	8,8	–
				0	0	0	0	4			(20,000)	4		
FR-4.0	0.63	0.025	V-0	(16)	(200)	(300)	(300)	(10.4)	–	31.8/30.7	413.7	–	–	–

Table 7.2 Continued on Next Page

Documents
Document Sharing Hub
Full document details: UL 746E 2022

Table 7.2 Continued

UL/ANSI Type	Min thickness		Flam class	Min HAI (Arc)		Min HWI (Sec)	Max HVAR (Sec)	Max HVTR (in/min)	D 495 Sec	Min DS	Min FS	CTI (V)	VR ohm-cm x10[a]	WA %Chg
	mm	inch		OS	AS	PLC	PLC	PLC		kV/mm	MPa (psi)	PLC		
				3	0	0	0	4			(60,000)			
	1.40	0.055	V-0	(48)	(200)	(300)	(300)	(13.7)	14	–	413.7	(100)	9,9	0.20
				2	0	0	0	4			(60,000)	4		
FR-4.1	0.63	0.025	V-0	(16)	(200)	(300)	(300)	(10.4)	–	31.8/30.7	413.7	–	–	–
				3	0	0	0	4			(60,000)			
	1.40	0.055	V-0	(48)	(200)	(300)	(300)	(13.7)	14	–	413.7	(100)	9,9	0.20
				2	0	0	0	4			(60,000)	4		
FR-5	0.63	0.025	V-1, V-0	(16)	(200)	(18)	(300)	(16.6)	–	31.2/29.6	413.7	–	–	–
				3	0	3	0	4			(60,000)			
	1.40	0.055	V-1, V-0	(48)	(200)	(44)	(300)	(16.5)	4	–	413.7	(100)	9,9	0.20
				2	0	2	0	4			(60,000)	4		
FR-15.0	0.63	0.025	V-0	(16)	(200)	(300)	(300)	(10.4)	–	31.8/30.7	413.7	–	–	–
				3	0	0	0	4			(60,000)			
	1.40	0.055	V-0	(48)	(200)	(300)	(300)	(13.7)	(14)	–	413.7	(100)	9,9	0.20
				2	0	0	0	4	3		(60,000)	4		
FR-15.1	0.63	0.025	V-0	(16)	(200)	(300)	(300)	(10.4)	–	31.8/30.7	413.7	–	–	–
				3	0	0	0	4			(60,000)			
	1.40	0.055	V-0	(48)	(200)	(300)	(300)	(13.7)	(14)	–	413.7	(100)	9,9	0.20
				2	0	0	0	4	3		(60,000)	4		
CEM-1	0.63	0.025	V-0	(33)	(200)	(25)	(120)	(24.0)	–	38.6/35.9	344.7	–	–	–
				2	0	3	1	4			(50,000)			

Table 7.2 Continued on Next Page

Documents
Document Sharing Hub
Full document details: UL 746E 2022

Table 7.2 Continued

UL/ANSI Type	Min thickness		Flam class	Min HAI (Arc)		Min HWI (Sec)	Max HVAR (Sec)	Max HVTR (in/min)	D 495 Sec	Min DS	Min FS	CTI (V)	VR ohm-cm x10[a]	WA %Chg
	mm	inch		OS	AS	PLC	PLC	PLC		kV/mm	MPa (psi)	PLC		
	1.57	0.062	V-0	(42)	(200)	(79)	(120)	(14.7)	109	30.3/28.1	241.3	(200)	8,8	0.14
				2	0	1	1	4			(35,000)	3		
CEM-3.0	0.63	0.025	V-0	(44)	(200)	(120)	(120)	(11.4)	–	29.5/28.4	344.7	–	–	–
				2	0	0	1	4			(50,000)			
	1.40	0.055	V-0	(47)	(200)	(120)	(120)	(11.3)	–	–	275.6	(225)	8, 12	0.21
				2	0	0	1	4			(40,000)	3		
CEM-3.1	0.63	0.025	V-0	(44)	(200)	(120)	(120)	(11.4)	–	29.5/28.4	344.7	–	–	–
				2	0	0	1	4			(50,000)			
	1.40	0.055	V-0	(47)	(200)	(120)	(120)	(11.3)	–	–	275.6	(225)	8, 12	0.21
				2	0	0	1	4			(40,000)	3		
GPO-2	0.63	0.025	HB	(168)	(200)	(51)	(300)	(1.0)	–	14.4/8.8	–	–	–	–
				0	0	2	0	1						
	1.40	0.055	V-0	(181)	(200)	(84)	(300)	(0.3)	111	–	124.1	(600)	7,6	0.20
				0	0	1	0	0			(18,000)	0		
GPO-3	0.63	0.025	HB	(200)	(200)	(67)	(300)	(0.1)	–	17.2/–	–	–	–	–
				0	0	1	0	0						
	1.40	0.055	V-0	(200)	(200)	(130)	(300)	(0.13)	151	–	124.1	(500)	–	0.28
				0	0	0	0	0			(18,000)	1		
GPY	0.63	0.025	HB, V-1, V-0	3	(200)	(300)	(15)	0	–	38.9/37.8	448.2	–	8,14	–
					0	0	3				(65,000)			
	1.40	0.055	HB, V-1, V-0	3	(200)	(300)	(300)	0	183	–	368.9	(100)	–	–
					0	0	0				(53,500)	4		

Table 7.2 Continued on Next Page

Documents
Document Sharing Hub
Full document details: UL 746E 2022

Table 7.2 Continued

UL/ANSI Type	Min thickness		Flam class	Min HAI (Arc)		Min HWI (Sec)	Max HVAR (Sec)	Max HVTR (in/min)	D 495 Sec	Min DS	Min FS	CTI (V)	VR ohm-cm x10[a]	WA %Chg
	mm	inch		OS	AS	PLC	PLC	PLC		kV/mm	MPa (psi)	PLC		

NOTES

1 For dielectric strength and volume resistivity the double values are:
Dry/Wet = (40 hours/23°C/50% R.H.)/(96 hours/35°C/90% R.H.)

2 HAI– high-current arc ignition

3 HWI – hot wire ignition

4 HVTR – high-voltage tracking rate

5 HVAR– high-voltage arc resistance

6 Flam class – flammability classification

7 CTI – comparative tracking index (All samples for the CTI are to be 3.2 mm or 0.125 inch thick)

8 VR – volume resistivity

9 WA – water absorption

10 The exponent "a" in the "VR" column header corresponds to the pairs of numbers shown in the column. The first number in the pair corresponds to the dry condition and the second number corresponds to the wet condition as described in Note 1.

11 DS – Dielectric Strength

12 FS – Flexural Strength

13 D495 – Arc Resistance, Standard Test Method for High-Voltage, Low-Current, Dry Arc Resistance of Solid Electrical Insulation, ASTM D495

Documents
Document Sharing Hub
Full document details: UL 746E 2022

Table 7.3
Rigid Industrial Laminate and Relative Thermal Index

UL/ANSI Type	Minimum thickness		Nominal thickness		Relative thermal index	
	mm	(inch)	mm	(inch)	Electrical	Mechanical
X	0.71	(0.028)	0.8	(0.031)	130	130
XP	0.71	(0.028)	0.8	(0.031)	130	130
XPC	0.71	(0.028)	0.8	(0.031)	130	130
XX	0.71	(0.028)	0.8	(0.031)	130	130
	1.45	(0.057)	1.6	(0.062)	140	140
XXP	0.71	(0.028)	0.8	(0.031)	130	130
	1.45	(0.057)	1.6	(0.062)	140	140
XXX	0.71	(0.028)	0.8	(0.031)	130	130
	1.45	(0.057)	1.6	(0.062)	140	140
XXXP	0.71	(0.028)	0.8	(0.031)	125	125
XXXPC	0.71	(0.028)	0.8	(0.031)	125	125
C	0.63	(0.025)	0.8	(0.031)	85	115
	1.40	(0.055)	1.6	(0.062)	115	125
CE	0.63	(0.025)	0.8	(0.031)	85	115
	1.40	(0.055)	1.6	(0.062)	115	125
L	0.63	(0.025)	0.8	(0.031)	85	115
	1.45	(0.057)	1.6	(0.062)	115	125
LE	0.63	(0.025)	0.8	(0.031)	115	85
	1.45	(0.057)	1.6	(0.062)	115	125
G-3	0.63	(0.025)	0.8	(0.031)	140	170
G-5	0.63	(0.025)	0.8	(0.031)	50	140
G-7	0.63	(0.025)	0.8	(0.031)	170	220
G-9	0.63	(0.025)	0.8	(0.031)	50	140
G-10	0.63	(0.025)	0.8	(0.031)	130	140
G-11	0.63	(0.025)	0.8	(0.031)	140	160
	1.40	(0.055)	1.6	(0.062)	170	180
FR-1	0.71	(0.028)	0.8	(0.031)	130	130
FR-2	0.71	(0.028)	0.8	(0.031)	75	75
	1.45	(0.057)	1.6	(0.062)	105	105
FR-3	0.71	(0.028)	0.8	(0.031)	90	90
	1.45	(0.057)	1.6	(0.062)	110	110
FR-4.0	0.63	(0.025)	0.8	(0.031)	130	140
FR-4.1	0.63	(0.025)	0.8	(0.031)	130	140
FR-5	0.63	(0.025)	0.8	(0.031)	140	160
	1.40	(0.055)	1.6	(0.062)	170	180
FR-15.0	0.63	(0.025)	0.8	(0.031)	150	150
FR-15.1	0.63	(0.025)	0.8	(0.031)	150	150
CEM-1	0.63	(0.025)	0.8	(0.031)	130	140
CEM-3.0	0.63	(0.025)	0.8	(0.031)	130	140

Table 7.3 Continued on Next Page

Documents
Document Sharing Hub
Full document details: UL 746E 2022

Table 7.3 Continued

UL/ANSI Type	Minimum thickness		Nominal thickness		Relative thermal index	
	mm	(inch)	mm	(inch)	Electrical	Mechanical
	1.40	(0.055)	1.6	(0.062)	130	140
CEM-3.1	0.63	(0.025)	0.8	(0.031)	130	140
	1.40	(0.055)	1.6	(0.062)	130	140
GPO-2	0.63	(0.025)	0.8	(0.031)	c	c
	1.40	(0.055)	1.6	(0.062)	105[a]	160
GPO-3	0.63	(0.025)	0.8	(0.031)	c	c
	1.40	(0.055)	1.6	(0.062)	105[b]	140
GPY	0.63	(0.025)	0.8	(0.031)	140	160
	1.40	(0.055)	1.6	(0.062)	170	180

[a] A maximum relative thermal index of 130°C may be assigned on successful completion of 2-point thermal aging program.

[b] A maximum relative thermal index of 120°C may be assigned on successful completion of 2-point thermal aging program.

[c] For 0.63 mm (0.025 inch) thick material, a 2-point thermal aging program is required before a temperature rating is assigned. See Section 9, especially 9.4, for additional information regarding 2-point thermal aging programs.

Table 7.4
Industrial Laminate Constituents

UL/ANSI type	Resin	Reinforcement material
X	Phenolic	Paper
XP	Phenolic	Paper
XPC	Phenolic	Paper
XX	Phenolic	Paper
XXP	Phenolic	Paper
XXX	Phenolic	Paper
XXXP	Phenolic	Paper
XXXPC	Phenolic	Paper
C	Phenolic	Cotton fabric
CE	Phenolic	Cotton fabric
L	Phenolic	Cotton fabric
LE	Phenolic	Cotton fabric
G-3	Phenolic	Continuous filament woven glass fabric
G-5	Melamine	Continuous filament woven glass fabric
G-7	Silicone	Continuous filament woven glass fabric
G-9	Melamine	Continuous filament woven glass fabric
G-10	Epoxy	Continuous filament woven glass fabric
G-11	Epoxy	Continuous filament woven glass fabric
FR-1	Phenolic	Paper
FR-2	Phenolic	Paper
FR-3	Epoxy	Paper
FR-4.0[a]	Brominated Epoxy	Continuous filament woven glass fabric
FR-4.1[a, b]	Non-Halogenated Epoxy	Continuous filament woven glass fabric

Table 7.4 Continued on Next Page

Documents
Document Sharing Hub
Full document details: UL 746E 2022

Table 7.4 Continued

UL/ANSI type	Resin	Reinforcement material
FR-5	Epoxy	Continuous filament woven glass fabric
CEM-1	Epoxy	Continuous filament woven glass fabric surfaces, cellulose paper core
FR-15.0[a]	Brominated Epoxy	Continuous filament woven glass fabric
FR-15.1[a, b]	Non-Halogenated Epoxy	Continuous filament woven glass fabric
CEM-3.0[c]	Brominated Epoxy	Continuous filament woven glass fabric surfaces, nonwoven glass core
CEM-3.1[b,c]	Non-Halogenated Epoxy	Continuous filament woven glass fabric surfaces, nonwoven glass core
GPO-2	Polyester	Random laid material of glass fibers
GPO-3	Polyester	Random laid material of glass fibers
FR-6	Polyester	Random laid material of glass fibers
GPY	Polyimide	Continuous filament woven glass fabric

[a] Total inorganic filler content equal to 45 percent maximum by weight in accordance with 7.20.

[b] Total halogen content equal to 900 ppm maximum Bromine or Chlorine and 1500 ppm combined Bromine and Chlorine tested in accordance with 7.13.

[c] Total inorganic filler content equal to 90 percent maximum by weight excluding the reinforcement.

7.3 The properties of materials may vary with thickness and orientation. Therefore, when preparing samples, consideration is to be given to testing samples representative of both the thickest and the thinnest end product applications, and where mechanical tests are involved, testing samples that are machine cut, bias cut, and transverse cut to the surface of the material based on orientation of reinforcement. See Figure 7.1 for examples of machine, bias and transverse cut samples.

Figure 7.1

Example of Machine, Bias and Transverse Cut Samples – Used for Materials with Orientation Dependent Properties, such as Seen with Woven Fibers

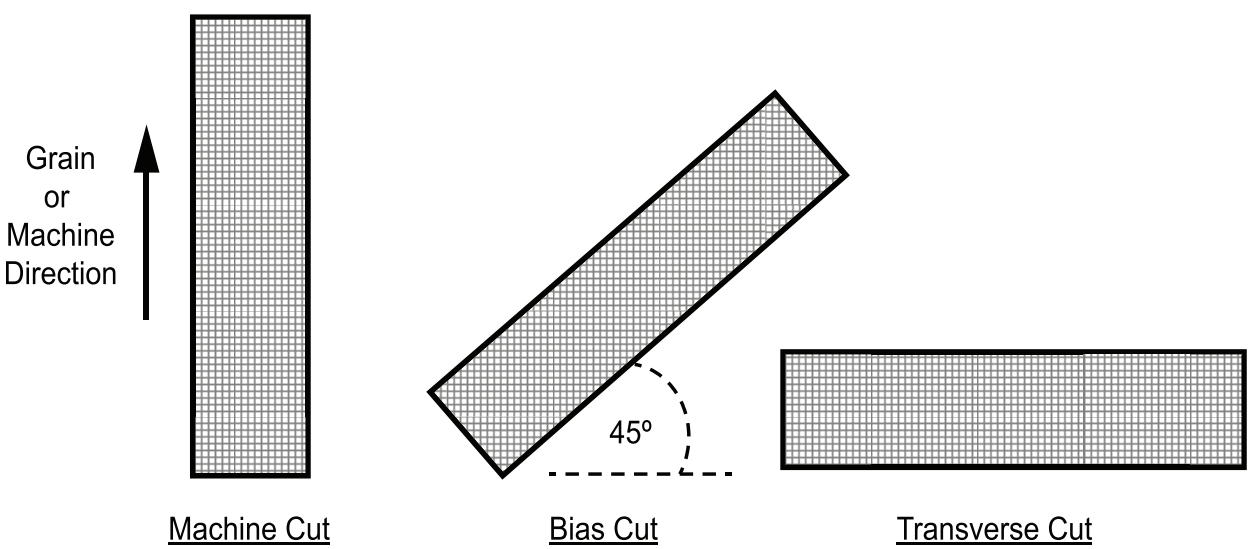

su1349

Documents
Document Sharing Hub
Full document details: UL 746E 2022

7.4 The industrial laminate sample thickness shall be measured and tested in accordance with ASTM D 374, Method A or C. The deviation from the sample minimum thickness shall be within the allowable range specified in Table 7.6 for UL/ANSI laminates and Table 7.5 for Non-ANSI laminates and other UL/ANSI laminate thicknesses not represented in Table 7.6.

7.5 Flammability tests shall be conducted in accordance with the Standard for Tests for Flammability of Plastic Materials for Parts in Devices and Appliances, UL 94.

7.6 Qualitative infrared (IR) testing is performed for the characterization of dielectric material. IR shall be conducted by surface scraping of the glossy side of the industrial laminate or based on the appropriate test procedure in accordance with the Standard for Polymeric Materials – Short Term Property Evaluations, UL 746A. The infrared spectrum for each type of material is unique and can be considered characteristic of that material. UL 746A, Appendix A contains the infrared analysis conformance criteria. IR shall be performed on each unique layer contained in the material construction to appropriately characterize variations in the material if the construction is non-homogenous.

7.7 Thermogravimetric Analysis (TGA) testing is performed for determination of the rapid thermal decomposition of a solid polymeric material to characterize the material and shall be conducted in accordance with the Standard for Polymeric Materials – Short Term Property Evaluations, UL 746A. Appendix B of UL 746A contains the thermogravimetric analysis conformance criteria.

7.8 Differential Scanning Calorimetry (DSC) testing is performed for determining transition temperatures of a solid polymeric material to characterize the material and shall be conducted in accordance with the Standard for Polymeric Materials – Short Term Property Evaluations, UL 746A. Appendix C of UL 746A contains the differential scanning calorimetry conformance criteria.

7.9 Ash content testing shall be conducted in accordance with the Standard for Polymeric Materials – Short Term Property Evaluations, UL 746A, on materials that contain noncombustible reinforcement, such as fiberglass.

7.10 Flexural strength testing shall be conducted in accordance with the Standard for Polymeric Materials – Short Term Property Evaluations, UL 746A, on samples cut in the machine (grain) direction. Ten samples shall be tested with dimensions and thicknesses specified in the appropriate application section. Samples with a 1.6 mm nominal thickness, the support span shall be 25 mm (1 inch) and the rate of crosshead motion shall be 0.8 mm/min (0.03 in/min). Samples with a 0.8 mm nominal thickness, the support span shall be 16 mm (0.63 inch) and the rate of crosshead motion shall be 0.5 mm/min (0.02 in/min).

7.11 Thermal aging programs shall be conducted in accordance with the Standard for Polymeric Materials – Long Term Property Evaluations, UL 746B.

7.12 The performance tests shall be conducted in accordance with the Standard for Polymeric Materials – Short Term Property Evaluations, UL 746A.

Documents
Document Sharing Hub

Full document details: UL 746E 2022

Table 7.5
Industrial Laminate Sample Build-Up Thickness Tolerance

Laminate nominal thickness,		Thickness tolerance,	
mm	(in)	mm	(in)
Less than 0.020	Less than 0.0008	± 0.003	± 0.0001
0.020 – 0.074	0.0007 – 0.003	± 0.010	± 0.0004
0.075 – 0.099	0.003 – 0.004	± 0.013	± 0.0005
0.10 – 0.19	0.004 – 0.007	±0.02	±0.0008
0.20 – 0.37	0.008 – 0.014	±0.03	±0.0012
0.38 – 0.49	0.015 – 0.019	±0.04	±0.0016
0.50 – 0.62	0.020 – 0.024	±0.05	±0.0019
0.63 – 1.59	0.025 – 0.061	±0.08	±0.0031
1.60 – 2.54	0.062 – 0.100	±0.10	±0.004
Greater than 2.55	Greater than 0.100	±0.13	±0.005

Table 7.6
UL/ANSI Industrial Laminate Sample Build Up Thickness Tolerance[a]

UL/ANSI Type	Minimum thickness		Nominal thickness	
	mm	(Inch)	mm	(Inch)
X, XP, XPC, XX, XXP, XXX, XXXP, XXXPC	0.71	(0.028)	0.8	(0.031)
	1.45	(0.057)	1.6	(0.062)
C, CE	0.63	(0.025)	0.8	(0.031)
	1.40	(0.055)	1.6	(0.062)
L, LE	0.63	(0.025)	0.8	(0.031)
	1.45	(0.057)	1.6	(0.062)
G-3, G-5, G-7, G-9, G-11	0.63	(0.025)	0.8	(0.031)
	1.40	(0.055)	1.6	(0.062)
FR-1, FR-2, FR-3	0.71	(0.028)	0.8	(0.031)
	1.45	(0.57)	1.6	(0.062)
FR-5, CEM-1, CEM-3.0, CEM-3.1, GPO-2, GPO-3	0.63	(0.025)	0.8	(0.031)
	1.40	(0.055)	1.6	(0.062)
G-10, FR-4.0, FR-4.1, FR-15.0, FR-15.1, GPY	0.38	(0.015)	0.43	(0.017)
	0.63	(0.025)	0.8	(0.031)
	1.40	(0.055)	1.6	(0.062)

[a] Samples submitted with a thickness between the minimum thickness and the nominal thickness are to receive a rating corresponding to the minimum thickness.

7.13 Total halogen content testing (i.e. the total amount of chlorine and bromine) in base materials shall be conducted in accordance with one of the following methods:

a) IEC 61189-2: Test methods for electrical materials, printed boards and other interconnection structures and assemblies – Part 2: Test methods for materials for interconnection structures, Test 2C12: Total halogen content in base materials; or

b) IEC 62321-3-2 – Determination of certain substances in electrotechnical products – Part 3-2: Screening – Flourine, chlorine and bromine in polymers and electronics by Combustion – Ion Chromatography (C-IC).

AVA Documents
Document Sharing Hub

7.14 This total halogen test is performed on unclad base materials with a minimum thickness of 1.5 mm with a retained resin content of 40 – 45 percent in accordance with the Specification for Base Materials for Rigid and Multilayer Printed Boards, IPC 4101.

7.15 Base materials (resin system plus reinforcement matrix) found to have a maximum total halogen content of 1500 ppm with a maximum chlorine content of 900 ppm and maximum bromine content of 900 ppm are defined as "non-halogenated."

7.16 Industrial laminates are evaluated for designation as a specific UL/ANSI material type or other designation by using the procedures in this Standard to obtain a profile of performance for comparison with those of known UL/ANSI material types. Figure 7.2 and Figure 7.3 shows the procedures to be followed in this evaluation.

Documents
Document Sharing Hub
Full document details: UL 746E 2022

Figure 7.2

Testing and Evaluation Program for Rigid Industrial Laminates

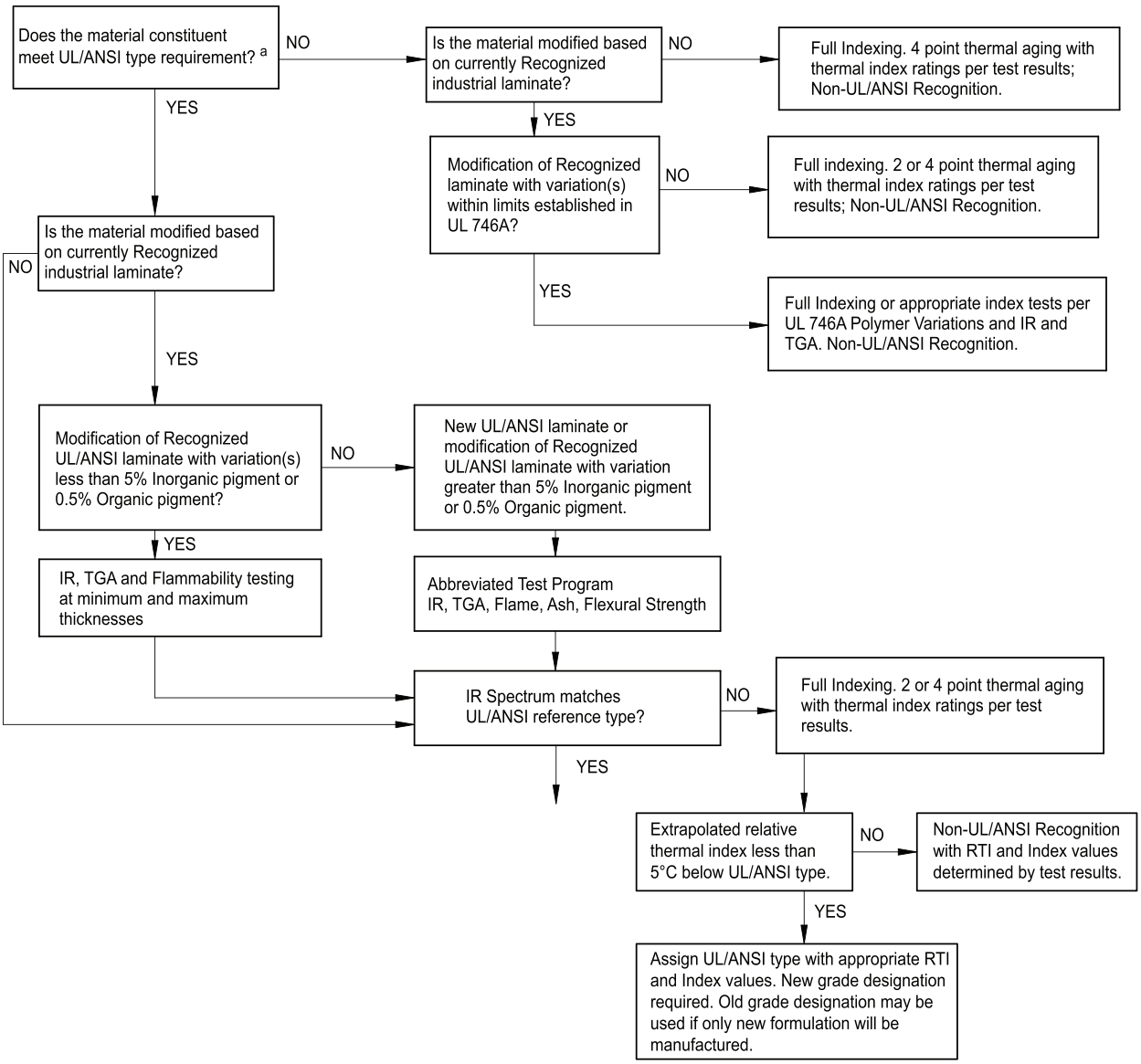

su0432c

[a] Refers to Table 7.4.

Documents
Document Sharing Hub
Full document details: UL 746E 2022

Figure 7.3

Testing and Evaluation Program for Rigid Industrial Laminates (continued)

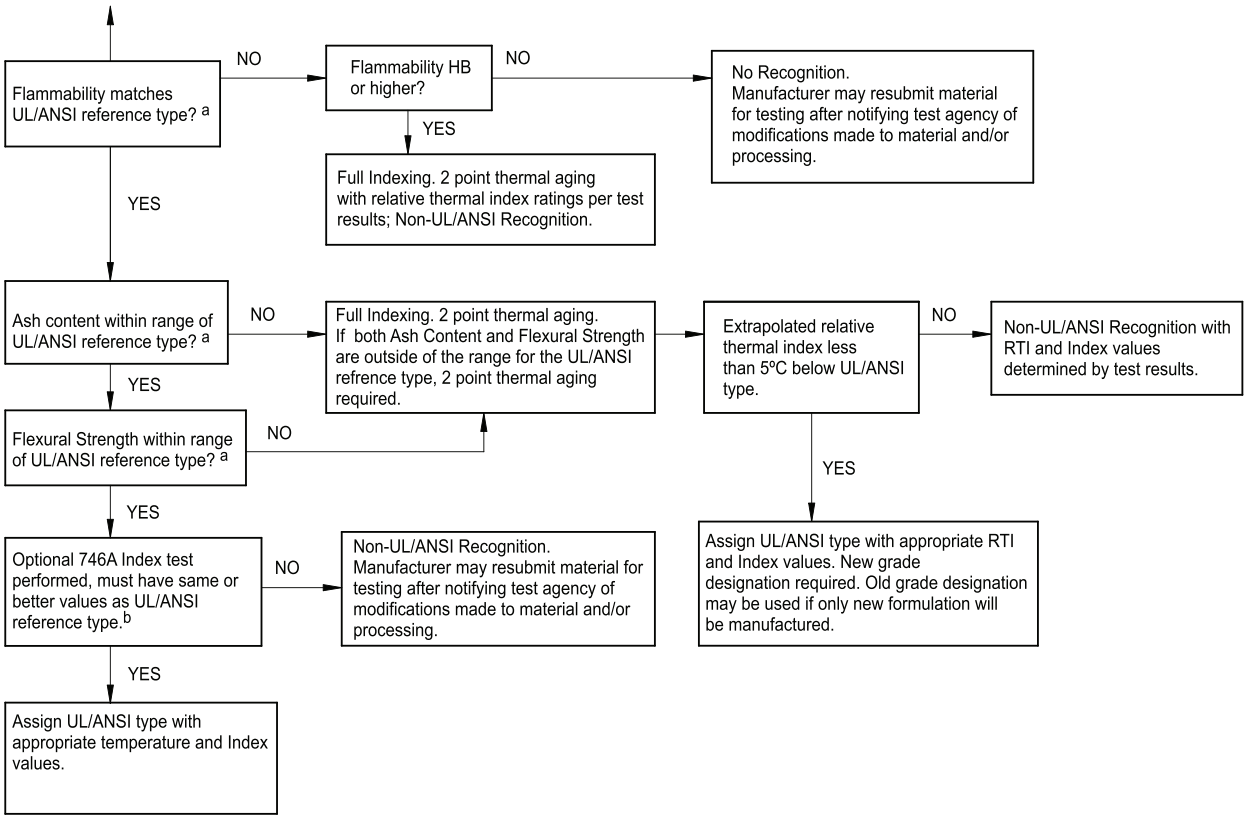

[a] Refers to Table 8.2.
[b] Refers to Table 7.1.

Documents
Document Sharing Hub
Full document details: UL 746E 2022

7.17 An industrial laminate tested on the basis of the abbreviated test program in Section 8, and found to be in compliance with the criteria in Table 7.2, Table 7.3, Table 7.4, and Table 8.2, need not be tested to the full program in Section 9. An industrial laminate that is not in compliance shall additionally be subject to the test program in Section 9, with the number of aging points and rating assignments as indicated in Figure 7.2 and Figure 7.3.

7.18 An industrial laminate having acceptable results from the abbreviated test program, shall have either the full testing or selected parts of the full test program, as indicated in Section 9, to obtain profile of performance values when needed for end product use.

7.19 Variations in material composition include, but are not limited to, different molecular weights, colors, fillers, reinforcements, and additives, and the variation shall be evaluated in accordance with Polymer Variations, Standard for Polymeric Materials – Short-Term Evaluations, UL 746A. The additional tests specified in 7.23 – 7.26 shall also be performed based on the material variation required test program.

7.20 FR-4.0, FR-4.1, FR-15.0 and FR-15.1 UL/ANSI types must contain 50 percent epoxy resin minimum excluding inorganic fillers. The total inorganic filler content by weight is 45 percent maximum. This shall be determined from constituent components provided by the supplier when submitting products for evaluation. IR, TGA, ash content and/or identification type investigations may be used to verify the presence of indicated compounds.

7.21 CEM-3.0, CEM-3.1 UL/ANSI types shall contain 90 percent maximum total inorganic filler content by weight excluding the reinforcement. This shall be determined from constituent components provided by the supplier when submitting products for evaluation. IR, TGA, ash content and/or identification type investigations may be used to verify the presence of indicated compounds.

7.22 For the purpose of calculating filler content, inorganic fillers added to the resin shall be considered part of the resin weight percentage and not part of the reinforcement weight percentage.

7.23 For Test Program Code A in the Standard for Polymeric Materials – Short-Term Evaluations, UL 746A, Table 9.2, FS – Flexural Strength and Ash Content (where applicable) shall also be conducted.

7.24 For Test Program Code B in the Standard for Polymeric Materials – Short-Term Evaluations, UL 746A, Table 9.2, HAI – High Current Arc Ignition shall also be conducted.

7.25 For Test Program Code C in the Standard for Polymeric Materials – Short-Term Evaluations, UL 746A, Table 9.2, DS – Dielectric Strength and VR – Volume Resistivity shall also be conducted.

7.26 Variation of the original percentage of pigment of not more than 5 percent inorganic or 0.5 percent organic shall require infrared analysis and thermogravimetric analysis in accordance with the Standard for Polymeric Materials – Short-Term Evaluations, UL 746A, and flammability testing in accordance with the Standard for Tests for Flammability of Plastic Materials for Parts in Devices and Appliances, UL 94. Higher pigment loading requires additional long term thermal aging.

7.27 Industrial laminates may be evaluated for creating a "Laminate Family." All industrial laminates to be included in the "Laminate Family" shall have identical IR scans. There shall be one IR reference scan used for future comparison purposes per family. If the performance profile indexing values of each industrial laminate are not the same value, the "Laminate Family" shall be assigned the mechanical and electrical RTI's and performance profile indexing values of the lowest rated material within the "Laminate Family." Industrial laminates included within the "Laminate Family" shall not be assigned higher mechanical and electrical RTI's and performance profile indexing values outside of the family under the same grade designations.

Documents
Document Sharing Hub

Full document details: UL 746E 2022

8 Abbreviated Test Program

8.1 Industrial laminates may be evaluated on the basis of the abbreviated unaged property test program, shown in Table 8.1. Additional tests are required for evaluating industrial laminates at ultrathin thicknesses, see Section 10, Ultrathin Laminate and Prepreg Test Program.

Table 8.1
Industrial Laminate Abbreviated Unaged Property Test Program and Sample Requirements

Property	Sample dimensions length by width mm (inch)	Nominal thickness mm (inch)	Minimum number of samples	Applicable UL/ANSI Types	For method refer to
Infrared Analysis Comparison (IR)	125 x 13 (5 x 0.5)	1.6 (0.062)	5	All	7.6, 8.6, UL 746A
	125 x 13 (5 x 0.5)	Minimum thickness	5	All	7.6, 8.6, UL 746A
Thermogravimetric Analysis (TGA)	125 x 13 (5 x 0.5)	1.6 (0.062)	5	All	7.7, 8.8, UL 746A
	125 x 13 (5 x 0.5)	Minimum thickness	5	All	7.7, 8.8, UL 746A
Flexural Strength	100 x 25 (4 x 1)	1.6 (0.062)	5	All	8.10, UL 746A
	100 x 25 (4 x 1)	0.8 (0.031)	5	All except XPC, G-9, FR-1, GPO-2, GPO-3	8.10, UL 746A
Ash Content	125 x 13 (5 x 0.5)	1.6 (0.062)	10	All except X, XP, XPC, XX, XXP, XXX, XXXP, XXXPC, C, CE, L, LE, FR-1, FR-2, FR-3	8.9, UL 746A
	125 x 13 (5 x 0.5)	0.8 (0.031)	10	All except X, XP, XPC, XX, XXP, XXX, XXXP, XXXPC, C, CE, L, LE, FR-1, FR-2, FR-3	8.9, UL 746A
Flammability Vertical	125 x 13 (5 x 0.5)	1.6 (0.062)	20	All	8.4, 8.5, UL 94
	125 x 13 (5 x 0.5)	0.8 (0.031)	20	All	8.4, 8.5, UL 94
Flammability Horizontal	125 x 13 (5 x 0.5)	1.6 (0.062)	6	All	8.4, 8.5, UL 94
	125 x 13 (5 x 0.5)	0.8 (0.031)	6	All	8.4, 8.5, UL 94
GPO-2 or GPO-3 Thermal Aging (Optional – See 8.11)					
2-Point Thermal Aging Flexural Strength	100 x 25 (4 x 1)	0.8 (0.031)	200	GPO-2, GPO-3	8.11, UL 746B

Table 8.1 Continued on Next Page

Documents
Document Sharing Hub
Full document details: UL 746E 2022

Table 8.1 Continued

Property	Sample dimensions length by width mm (inch)	Nominal thickness mm (inch)	Minimum number of samples	Applicable UL/ANSI Types	For method refer to
2-Point Thermal Aging Dielectric Strength	100 x 100 (4 x 4)	1.6 (0.062)	200	GPO-2, GPO-3	8.11, UL 746B
2-Point Thermal Aging Dielectric Strength	100 x 100 (4 x 4)	0.8 (0.031)	200	GPO-2, GPO-3	8.11, UL 746B

NOTES –

1 The above samples are to be in the machine (grain) direction.

2 The samples are to be prepared declad by completely etching a metal clad sheet, where applicable.

3 Vertical or Horizontal flammability testing shall be performed in accordance with Table 8.2.

4 IR testing shall be performed on unclad and declad samples, where applicable. If a separate adhesive is used to apply metal cladding to the laminate, the additional Performance Profile Indexing tests in 19.11 shall be performed.

5 See Section 10 for the Ultrathin Laminate and Prepreg Test program, and the test program for laminate thicknesses below 0.8 mm nominal thickness.

8.2 An industrial laminate having acceptable characteristics of flammability, infrared analysis, ash content (where applicable), flexural strength, and thermal aging (when required), as described in this section for a UL/ANSI type industrial laminate of the same generic type, shall be assigned the UL/ANSI type designation, the profile of performance values shown in Table 7.2 and the relative thermal index shown in Table 7.3 for that UL/ANSI material. A UL/ANSI material requiring a separate adhesive to bond the metal cladding shall comply with the additional Performance Profile Indexing tests shown in 19.11.1, 19.11.2, and 19.11.3. An industrial laminate not intended to be a UL/ANSI type and/or having unacceptable fundamental variations in the IR spectra as indicated in 8.6 shall be evaluated per the full test program. See Section 9.

8.3 The criteria in 8.4 – 8.11 is to be applied when comparing industrial laminates with UL/ANSI material types.

8.4 The UL/ANSI laminate shall have a flammability classification in each thickness as indicated in Table 8.2.

Table 8.2
Abbreviated Industrial Laminate Program Requirements

UL/ANSI Grade	Acceptable values					
	Minimum flexural strength MPa (psi)		Ash content range (% by weight)		UL 94 Flammability Class	
	Thickness		Thickness		Thickness	
	0.8 mm (0.031 inch)	1.6 mm (0.062 inch)	0.8 mm (0.031 inch)	1.6 mm (0.062 inch)	0.8 mm (0.031 inch)	1.6 mm (0.062 inch)
X	151.7 (22,000)	172.4 (25,000)	–	–	HB	HB
XP	82.7 (12,000)	89.6 (13,000)	–	–	HB	HB

Table 8.2 Continued on Next Page

Documents
Document Sharing Hub
Full document details: UL 746E 2022

Table 8.2 Continued

UL/ANSI Grade	Acceptable values					
	Minimum flexural strength MPa (psi)		Ash content range (% by weight)		UL 94 Flammability Class	
	Thickness		Thickness		Thickness	
	0.8 mm (0.031 inch)	1.6 mm (0.062 inch)	0.8 mm (0.031 inch)	1.6 mm (0.062 inch)	0.8 mm (0.031 inch)	1.6 mm (0.062 inch)
XPC	–	68.9 (10,000)	–	–	HB	HB
XX	103.4 (15,000)	103.4 (15,000)	–	–	HB	HB
XXP	96.5 (14,000)	96.5 (14,000)	–	–	HB	HB
XXX	93.1 (13,500)	93.1 (13,500)	–	–	HB	HB
XXXP, XXXPC	82.7 (12,000)	82.7 (12,000)	–	–	HB	HB
C	117.2 (17,000)	117.2 (17,000)	–	–	HB	HB
CE, L	113.8 (16,500)	113.8 (16,500)	–	–	HB	HB
LE	110.3 (16,000)	110.3 (16,000)	–	–	HB	HB
G-3	124.1 (18,000)	137.9 (20,000)	57.7 – 67.2	57.7 – 67.2	HB	HB
G-5	379.1 (55,000)	344.7 (50,000)	55.0 – 63.3	55.0 – 63.3	V-0	V-0
G-7	68.9 (10,000)	137.9 (20,000)	85.3 – 91.6	85.3 – 91.6	V-0	V-0
G-9	–	413.7 (60,000)	55.0 – 63.3	55.0 – 63.3	V-0	V-0
G-10	413.7 (60,000)	413.7 (60,000)	55.0 – 67.7	55.0 – 67.7	HB	HB
G-11	413.7 (60,000)	413.7 (60,000)	60.5 – 70.0	60.5 – 70.0	HB	HB
FR-1	–	68.9 (10,000)	–	–	V-0 or V-1	V-0 or V-1
FR-2	82.7 (12,000)	82.7 (12,000)	–	–	V-0 or V-1	V-0 or V-1
FR-3	137.9 (20,000)	137.9 (20,000)	–	–	V-0 or V-1	V-0 or V-1
FR-4.0	413.7 (60,000)	413.7 (60,000)	55.0 – 78.0	55.0 – 78.0	V-0	V-0
FR-5	413.7 (60,000)	413.7 (60,000)	60.5 – 70.0	60.5 – 70.0	V-0 or V-1	V-0 or V-1

Table 8.2 Continued on Next Page

Documents
Document Sharing Hub
Full document details: UL 746E 2022

Table 8.2 Continued

UL/ANSI Grade	Acceptable values					
	Minimum flexural strength MPa (psi)		Ash content range (% by weight)		UL 94 Flammability Class	
	Thickness		Thickness		Thickness	
	0.8 mm (0.031 inch)	1.6 mm (0.062 inch)	0.8 mm (0.031 inch)	1.6 mm (0.062 inch)	0.8 mm (0.031 inch)	1.6 mm (0.062 inch)
CEM-1	344.7 (50,000)	241.3 (35,000)	32.6 – 39.8	16.4 – 23.3	V-0	V-0
CEM-3.0	344.7 (50,000)	275.6 (40,000)	42.7 – 68.3	29.7 – 44.9	V-0	V-0
GPO-2	–	124.1 (18,000)	44.6 – 60.2	44.6 – 60.2	–	V-0
GPO-3	–	124.1 (18,000)	47.8 – 57.2	47.8 – 57.2	–	V-0
GPY	448.2 (65,500)	368.9 (53,500)	58.5 –71.5	58.5 – 71.5	HB, V-0, or V-1	HB, V-0, or V-1

8.5 When the UL 94 flammability classification (see 8.4) is greater or less than that of the UL/ANSI reference type (see Table 8.2), the material shall be subjected to full indexing and two point thermal aging as described in the Standard for Polymeric Materials – Long Term Property Evaluations, UL 746B. See Table 9.1 for the test samples required. The laminate shall not be designated as a UL/ANSI type material.

8.6 A qualitative infrared spectrum shall be obtained and shall indicate the same composition as recorded in the spectrum of the reference UL/ANSI type. Typical infrared (IR) reference spectra are shown in Figure A1.1 – Figure A1.31, for each UL/ANSI type. The IR spectrum obtained from the industrial laminate shall not indicate significant differences in comparison to the UL/ANSI reference spectra.

8.7 A material with non-compliant IR spectra fundamental variations qualifies for additional testing including full performance profile indexing and two or four point thermal aging as described in the Full Test Program, Section 9. When the laminate constituents, including resin and reinforcement material, and test results are determined to be equivalent to the UL/ANSI type, a relative thermal index and a UL/ANSI type designation shall be assigned.

8.8 A Thermogravimetric Analysis (TGA) scan shall be conducted for characterization of the material.

8.9 An ash content analysis is to be conducted in accordance with the Standard for Polymeric Materials – Short Term Property Evaluations, UL 746A, on materials that contain a noncombustible reinforcement such as fiberglass. To determine compliance, the ash content shall fall within the range of values shown in Table 8.2.

Exception: When ash content is not as shown in Table 8.2 but flammability, infrared analysis, and flexural strength are acceptable, full indexing and two point thermal aging shall be conducted as described in the Full Test Program, Section 9. When test results are determined to be equivalent to the UL/ANSI type, a relative thermal index and a UL/ANSI type designation shall be assigned.

8.10 A flexural strength test shall be conducted and shall not be less than the minimum values indicated in Table 8.2.

Exception: When flexural strength is not as shown in Table 8.2 but flammability, infrared analysis, and ash content are acceptable, full indexing and a two point thermal aging shall be conducted as described in the

AVA Documents Document Sharing Hub

Full Test Program, Section 9. When test results are determined to be equivalent to the UL/ANSI type, a relative thermal index and a UL/ANSI type designation shall be assigned.

8.11 A thermal aging program for UL/ANSI Type GPO-2 and GPO-3 industrial laminates shall be conducted and:

a) An electrical relative thermal index of 105°C shall be assigned without conducting a thermal aging program.

b) An electrical Relative Thermal Index higher than 105°C – maximum of 130°C for Type GPO-2 and maximum of 120°C for Type GPO-3 – may be assigned as the result of a one-point thermal aging program on 1.40 mm (0.055 inch) thick samples, or a two-point thermal aging program on 0.63 (0.025 inch) thick samples. See 9.4.

9 Full Test Program

9.1 The full test program consists of determining all of the performance characteristics of the laminate material shown in Table 7.2 in conjunction with a 2 or 4 point thermal aging program. The 2 point thermal aging program shall not result in the assignment of a UL/ANSI type designation if the infrared analysis or flammability classification of the material does not compare favorably with the UL/ANSI type data shown in Table 8.2 or the UL/ANSI reference spectra. Typical infrared (IR) reference spectra of each UL/ANSI type are shown in Figure A1.1 – Figure A1.31. The four point thermal aging program may result in the assignment of a UL/ANSI type designation when the test data, determined by the methods described in the Standard for Polymeric Materials – Long Term Property Evaluations, UL 746B, warrants no less than the relative thermal index of the UL/ANSI type. Additional tests are required for evaluating industrial laminates at ultrathin thicknesses, see Section 10.

9.2 The required profile of performance tests are shown in Table 9.1, together with the samples required for the test. Samples shall be cut in the specified dimensions in the machine (grain) direction, unless otherwise specified. The samples shall be prepared from declad material by completely etching a metal clad sheet, where applicable.

9.3 Flexural strength test shall be conducted on five samples. Samples with a 1.6 mm nominal thickness, the support span shall be 25 mm (1 inch) and the rate of crosshead motion shall be 0.8 mm/min (0.03 in/min). Samples with a 0.8 mm nominal thickness, the support span shall be 16 mm (0.63 inch) and the rate of crosshead motion shall be 0.5 mm/min (0.02 in/min).

9.4 Thermal aging tests for a 2-point thermal aging program are to be conducted at elevated temperatures and times similar to that shown in Table 9.2. The dielectric strength property shall be used as the test characteristic for material UL/ANSI Types G-7, GPO-2, and GPO-3. The flexural strength property shall be used as the tested characteristic for all UL/ANSI Types. Test procedures are described in the Standard for Polymeric Materials – Long Term Property Evaluations, UL 746B. A control (an industrial laminate of the same generic UL/ANSI Type) shall be provided for comparison purposes of the 2-point thermal aging program. If a control material of the same generic UL/ANSI Type is not available, 4-point thermal aging is required.

9.5 A comparison of the 2-point thermal aging results of the candidate and control material shall be conducted. If the extrapolated relative thermal index of the candidate material is less than 5°C (9°F) below the relative thermal index of the requested UL/ANSI type, the candidate material shall be assigned the same relative thermal index as that determined for the UL/ANSI type. If the extrapolation results in a relative thermal index that is more than 5°C (9°F) below the UL/ANSI type's relative thermal index, the candidate material shall be assigned the relative thermal index determined by the comparison. This relative thermal index shall be assigned for both mechanical and electrical characteristics although only one was tested. Temperatures are assigned in discrete 5°C (9°F) steps to the next lowest value in

AVA Documents
Document Sharing Hub
Full document details: UL 746E 2022

accordance with the requirements for Assignment of Temperature Classifications in the Standard for Polymeric Materials – Long Term Property Evaluations, UL 746B.

9.6 If the evaluation of thermal aging test data for the material requires assignment of a lower temperature than those values shown in Table 7.3 for the UL/ANSI type, the material shall not be assigned a UL/ANSI type designation.

9.7 When a 4-point thermal aging is performed on a material similar to an existing UL/ANSI grade, the test program, samples, methods, data analysis, and evaluation shall be as described in the Standard for Polymeric Materials – Long Term Property Evaluations, UL 746B. The Primary Property to be tested shall be dielectric strength for UL/ANSI grades G7, GPO-2, and GPO-3. Flexural strength and dielectric strength shall be the primary test property for all other UL/ANSI grades. Secondary properties shall be comprised of dielectric strength (where not used as a Primary Property) and flammability. The material shall not be assigned a UL/ANSI Type designation.

9.8 If the composition of the material as determined by Infrared Analysis does not compare favorably with any existing UL/ANSI type, then both dielectric strength and flexural strength shall be used as primary properties for testing, plus other secondary properties mentioned in 9.7.

Exception: If the comparison of the material to a generic Polytetrafluoroethylene (PTFE) resin as determined by the PTFE Abbreviated Test Program, Table 9.3, and IR analysis compares favorably, then the thermal aging program may be waived and an electrical and mechanical relative thermal index of 130°C can be granted. The PTFE resin can contain inert fillers (i.e., the filler is not chemically reactive with the PTFE resin and does not contribute to the overall flammability) and/or glass reinforcement. If an electrical and mechanical relative thermal index higher than 130°C is required, then a 4-point thermal aging program shall be performed as described in 9.8. In addition, the appropriate performance profile indexing tests as described in Table 9.1 shall be performed at the minimum and maximum laminate thickness.

9.9 An industrial laminate having an established electrical thermal index and acceptable performance profile characteristics as described in Table 9.4 meets the Direct Support Requirements (DSR) and may provide direct support of current carrying parts at 120V rms or less and 15A or less.

Table 9.1
Rigid Industrial Laminate Full Test Program and Sample Requirements

Property	Sample dimensions, length by width mm (inch)	Nominal thickness, mm (inch)	Minimum number of samples	Applicable materials	For method refer to
Short Term Performance Profile Test					
Infrared Analysis (IR)	125 x 13 (5 x 0.5)	1.6 (0.062)	5	All	7.6, UL 746A
	125 x 13 (5 x 0.5)	Minimum thickness	5	All	7.6, UL 746A
Thermogravimetric Analysis (TGA)	125 x 13 (5 x 0.5)	1.6 (0.062)	5	All	7.7, UL 746A
	125 x 13 (5 x 0.5)	Minimum thickness	5	All	7.7, UL 746A
Differential Scanning Calorimetry (DSC)	125 x 13	1.6	5	Thermoplastic Materials	UL 746A

Table 9.1 Continued on Next Page

Documents
Document Sharing Hub
Full document details: UL 746E 2022

Table 9.1 Continued

Property	Sample dimensions, length by width mm (inch)	Nominal thickness, mm (inch)	Minimum number of samples	Applicable materials	For method refer to
	(5 x 0.5)	(0.062)			
	125 x 13 (5 x 0.5)	Minimum thickness	5	Thermoplastic Materials	UL 746A
Flexural Strength	100 x 25 (4 x 1)	1.6 (0.062)	5	All	8.10, 9.3, UL 746A
	100 x 25 (4 x 1)	0.8 (0.031)	5	All	8.10, 9.3, UL 746A
Ash Content	125 x 13 (5 x 0.5)	1.6 (0.062)	10	All (if applicable)	8.9, UL 746A
	125 x 13 (5 x 0.5)	0.8 (0.031)	10	All (if applicable)	8.9, UL 746A
Flammability Vertical	125 x 13 (5 x 0.5)	1.6 (0.062)	20	All	8.4, UL 94
	125 x 13 (5 x 0.5)	0.8 (0.031)	20	All	8.4, UL 94
Flammability Horizontal	125 x 13 (5 x 0.5)	1.6 (0.062)	6	All	8.4, UL 94
	125 x 13 (5 x 0.5)	0.8 (0.031)	6	All	8.4, UL 94
High Current Arc Ignition (HAI)	125 x 13 (5 x 0.5)	1.6 (0.062)	10	All	UL 746A
	125 x 13 (5 x 0.5)	0.8 (0.031)	10	All	UL 746A
Hot Wire Ignition (HWI)	125 x 13 (5 x 0.5)	1.6 (0.062)	10	All	UL 746A
	125 x 13 (5 x 0.5)	0.8 (0.031)	10	All	UL 746A
Dielectric Strength	100 x 100 (4 x 4)	1.6 (0.062)	10	All	UL 746A
Arc Resistance (ASTM D 495)	100 x 100 (4 x 4)	1.6 (0.062)	5	All	UL 746A
Comparative Tracking Index (CTI)	100 x 100 (4 x 4)	2.5 (0.10)	10	All	UL 746A
Volume Resistivity	100 x 100 (4 x 4)	1.6 (0.062)	10	All	UL 746A
Moisture Absorption and Immersion	76 x 25 (3 x 1)	1.6 (0.062)	5	All	UL 746A
Heat Deflection	125 x 13 (5 x 0.5)	3.2 (0.125)	5	Thermoplastic Materials	UL 746A
Long Term Thermal Aging Test					

Table 9.1 Continued on Next Page

Documents
Document Sharing Hub
Full document details: UL 746E 2022

Table 9.1 Continued

Property	Sample dimensions, length by width mm (inch)	Nominal thickness, mm (inch)	Minimum number of samples	Applicable materials	For method refer to
4-Point Thermal Aging Flexural Strength	100 x 25 (4 x 1)	1.6 (0.062)	400	All	UL 746B
2-Point Thermal Aging Flexural Strength	100 x 25 (4 x 1)	0.8 (0.031)	200	All	UL 746B
4-Point Thermal Aging Dielectric Strength	100 x 100 (4 x 4)	1.6 (0.062)	400	All	UL 746B
2-Point Thermal Aging Dielectric Strength	100 x 100 (4 x 4)	0.8 (0.031)	200	All	UL 746B
Secondary Flame	125 x 13 (5 x 0.5)	0.8 (0.031)	60	All	UL 746B

NOTES –

1 The above samples are to be in the machine (grain) direction.

2 The samples are to be prepared declad by completely etching a metal clad sheet, where applicable.

3 Vertical or Horizontal flammability testing shall be performed in accordance with the requested rating.

4 IR testing shall be performed on unclad and declad samples, where applicable. If a separate adhesive is used to apply metal cladding to the laminate, the additional performance profile indexing tests shown in 19.11 shall be performed.

5 IR, TGA, DSC, Flexural Strength, Ash Content, and Flammability are not required if previously determined under the Abbreviated Test Program described in Section 8.

6 Dry Dielectric Strength thermal aging testing is required. In addition, Wet Dielectric Strength thermal aging testing is required if humidity conditioning after aging will result in more severe physical and thermal damage to the material (hygroscopic material). Hygroscopic materials shall be cooled in a desiccator to prevent moisture absorption.

7 The 4-point thermal aging thickness for Dielectric Strength may be reduced if the thicker thickness exhibits flashover and does not breakdown through the sample.

8 Secondary flammability testing at 0.8 mm (0.031 inch) may be waived if performed on thinner build-up thicknesses in accordance with Section 10, Table 10.4.

9 See Section 10 for the Ultrathin Laminate and Prepreg Test program, and the test program for laminate thicknesses below 0.8 mm nominal thickness.

10 If CTI test samples are submitted at a thickness less than 2.5 mm (0.10 inch), the required number of samples varies depending on the thickness of the laminate. The number of samples shall be increased in order to provide 10 samples built up to the required 2.5 mm (0.10 inch) testing thickness.

11 Flexural Strength or Tensile Strength testing shall be performed in accordance with the material performance. If during the Flexural Strength test, the sample does not break within the 5 percent strain limit as defined in the Standard Test Methods for Flexural Properties of Unreinforced and Reinforced Plastics and Electrical Insulating Materials, ASTM D 790, then Tensile Strength shall be evaluated using type I samples in accordance with the Standard Test Method for Tensile Properties of Plastics, ASTM D 638.

Table 9.2
Examples of Two-Point Thermal Aging Programs

UL/ANSI type	Aging temperature, °C	Aging time (hours)			
X, XP, XPC	180	480	640	800	960
	170	870	1160	1450	1740
XX, XXP, XXX	180	585	780	975	1170
	170	1200	1600	2000	2400

Table 9.2 Continued on Next Page

Documents
Document Sharing Hub
Full document details: UL 746E 2022

Table 9.2 Continued

UL/ANSI type	Aging temperature, °C	Aging time (hours)			
XXXP, XXXPC	180	465	620	775	930
	170	720	960	1200	1440
C, CE, L, LE	170	420	560	700	840
	160	720	960	1200	1440
G-3	230	390	520	650	780
	210	1050	1400	1750	2100
G-5, G-9	170	250	335	420	505
	160	960	1280	1600	1920
G-7	230	300	400	500	600
	210	900	1200	1500	1800
FR-1	180	480	640	800	960
	170	900	1200	1500	1800
FR-2	180	370	495	620	745
	160	765	1020	1275	1530
FR-3	160	480	640	800	960
	150	780	1040	1300	1560
FR-4.0, FR-4.1, G10	180	300	400	500	600
	170	630	840	1050	1260
FR-5, G11	210	450	600	750	900
	200	1080	1440	1800	2160
CEM-1	190	800	1040	1300	1560
	180	1500	2000	2500	3000
CEM-3.0	180	660	800	1100	1320
	170	1260	1680	2100	2520
CEM-3.1	180	660	800	1100	1320
	170	1260	1680	2100	2520
GPO-2	170	300	400	500	600
	160	600	800	1000	1200
GPO-3	145	210	280	350	420
	135	900	1200	1500	1800
GPY	225	1230	1640	2050	2460
	210	2040	2720	3400	4080

Table 9.3
Polytetrafluoroethylene (PTFE) Abbreviated Unaged Property Test Program and Sample Requirements for Generic 130°C Electrical and Mechanical RTI

Property	Sample dimensions length by width mm (inch)	Nominal thickness mm (inch)	Minimum number of samples	Applicable material	For method refer to
Infrared Analysis Comparison (IR)	125 x 13 (5 x 0.5)	1.6 (0.062)	5	PTFE	7.6, UL 746A
	125 x 13	Minimum thickness	5	PTFE	7.6, UL 746A

Table 9.3 Continued on Next Page

Documents
Document Sharing Hub
Full document details: UL 746E 2022

Table 9.3 Continued

Property	Sample dimensions length by width mm (inch)	Nominal thickness mm (inch)	Minimum number of samples	Applicable material	For method refer to
	(5 x 0.5)				
Thermogravimetric Analysis (TGA)	125 x 13 (5 x 0.5)	1.6 (0.062)	5	PTFE	7.7, UL 746A
	125 x 13 (5 x 0.5)	Minimum thickness	5	PTFE	7.7, UL 746A
Differential Scanning Calorimetry (DSC)	125 x 13 (5 x 0.5)	1.6 (0.062)	5	PTFE	UL 746A
	125 x 13 (5 x 0.5)	Minimum thickness	5	PTFE	UL 746A
Flammability Vertical	125 x 13 (5 x 0.5)	1.6 (0.062)	20	PTFE	8.4, UL 94
	125 x 13 (5 x 0.5)	0.8 (0.031)	20	PTFE	8.4, UL 94
Ash Content	125 x 13 (5 x 0.5)	1.6 (0.062)	10	PTFE	8.9, UL 746A
	125 x 13 (5 x 0.5)	0.8 (0.031)	10	PTFE	8.9, UL 746A
Flexural Strength	100 x 25 (4 x 1)	1.6 (0.062)	10	PTFE	8.10, 9.3, UL 746A
	100 x 25 (4 x 1)	0.8 (0.031)	10	PTFE	8.10, 9.3, UL 746A
Tensile Strength	ASTM D 638 Type I	1.6 (0.062)	10	PTFE	UL 746A, ASTM D 638
	ASTM D 638 Type I	0.8 (0.031)	10	PTFE	UL 746A, ASTM D 638

NOTES –

1 The above samples are to be in the machine (grain) direction. The samples are to be prepared declad by completely etching a metal clad sheet, where applicable.

2 If Direct Support is necessary, the appropriate Performance Profile Index tests shall also be performed in accordance with Table 9.1 and Table 9.4.

3 The full test program shall be performed for Electrical and Mechanical RTI's higher than 130°C.

4 See Section 10 for the Ultrathin Laminate and Prepreg Test program.

5 Flexural Strength or Tensile Strength testing shall be performed in accordance with the material performance. If during the Flexural Strength test, the sample does not break within the 5 percent strain limit as defined in the Standard Test Methods for Flexural Properties of Unreinforced and Reinforced Plastics and Electrical Insulating Materials, ASTM D 790, then Tensile Strength shall be evaluated using type I samples in accordance with the Standard Test Method for Tensile Properties of Plastics, ASTM D 638.

Documents
Document Sharing Hub
Full document details: UL 746E 2022

Table 9.4
Direct Support Requirements (DSR) of PWB Materials

Test[c]	Units or PLC	V-0, V-1, V-2, HB, VTM-0[f], VTM-1[f], VTM-2[f]	Thickness mm (inch)[d]	
High current arc ignition (HAI)	Max PLC	3	Actual[a]	
Hot wire ignition (HWI)	Max PLC	4	Actual[a]	
Volume resistivity – dry	Min ohm-cm x 10^6	50	1.6[e]	(0.062)
Volume resistivity – wet	Min ohm-cm x 10^6	10	1.6[e]	(0.062)
Dielectric strength – dry	Min k Volts per mm	6.89	1.6[e]	(0.062)
Dielectric strength – wet	Min k Volts per mm	6.89	1.6[e]	(0.062)
Comparative tracking index (CTI)	Max PLC	4	3.2[e]	(0.125)
Heat deflection	Degrees C	b	3.2[e]	(0.125)

[a] Actual thickness or minimum thickness of group being considered.

[b] Not required for thermosets and films; for thermoplastics, at least 10°C above rated operating temperature with 90°C minimum value.

[c] Testing is to be as described in the Standard for Polymeric Materials – Short Term Property Evaluations, UL 746A.

[d] Test sample thickness on which the index value is based.

[e] Test sample representative of all thicknesses.

[f] VTM-0, VTM-1, VTM-2 ratings apply only to etched films.

10 Ultrathin Laminate and Prepreg Test Program

10.1 General

10.1.1 A summary of the test program for ultrathin industrial laminates is provided in Table 10.1.

Table 10.1
UL Testing and Evaluation Program for Ultrathin Industrial Laminates

Type of laminate	Laminate or build-up thickness, mm (in)	Sheet thickness is per Table 10.2	Testing	Reference
UL/ANSI[a]	0.8 (0.031) or greater	Yes	None	10.2.2.1
		No	Aging	10.2.2.2
	0.38 – 0.8 (0.015 – 0.031)	Yes	Indexing	10.2.3.1
		No	Aging and indexing	10.2.3.5
	Less than 0.38 (0.015)	Yes	Mechanical aging only and indexing	10.2.4
		No	Aging and indexing	10.2.4
Non-ANSI[b]	Less than 0.8 (0.031)	No	Aging and indexing	10.3
UL/ANSI[a] or non-ANSI[b]	Same or greater	No[c]	Aging	10.1.7

NOTE – The above test programs assume the material is previously investigated per the Abbreviated Test program in Section 8 or the Full Test program in Section 9.

[a] Candidate material infrared (IR) reference scan compares to a UL/ANSI reference scan.

[b] Candidate material infrared (IR) reference scan does not compare to a UL/ANSI reference scan.

[c] The laminate or prepreg individual sheet thickness is to be reduced for an established build-up thickness.

Documents
Document Sharing Hub
Full document details: UL 746E 2022

10.1.2 Ultrathin laminates and prepregs shall be of the same type and resin system that was previously investigated under the industrial laminate test program described in Section 8 and/or Section 9.

10.1.3 Ultrathin laminates and prepregs using a resin system not previously investigated shall be tested under a full rigid industrial laminate program including performance profile indexing, 4-point thermal aging as described in 9.1, and the ultrathin laminate and prepreg test program as described in 10.2, if the material is a UL/ANSI type, and 10.3, if the material is a non-UL/ANSI type.

Exception: If the ultrathin laminate and prepreg maximum build-up thickness is less than 1.6 mm, then the laminate shall be tested under a full rigid industrial laminate program including performance profile indexing and thermal aging at the maximum and minimum build-up thicknesses. Samples in intermediate thicknesses shall be provided and shall be tested if the results obtained on the maximum and minimum build-up thickness indicate inconsistent test results. The material shall not be assigned a UL/ANSI type designation.

10.1.4 The ultrathin material thermal aging and performance profile index test program, samples, test method, data analysis, and evaluation shall be as described in the Standard for Polymeric Materials – Long Term Property Evaluations, UL 746B and the Standard for Polymeric Materials – Short Term Property Evaluations, UL 746A.

10.1.5 Thermal aging samples and performance profile indexing samples shall be constructed in the minimum laminate thickness, and in the minimum build-up thicknesses using at least one minimum individual laminate and prepreg sheet thickness.

10.1.6 The established laminate minimum thickness and/or the minimum build-up thickness for ultrathin laminate and prepreg materials may be reduced by performing 2 point thermal aging. Testing shall be as described in Table 10.3 for performance profile properties, and Table 10.4 for thermal aging properties. The primary electrical property shall be dielectric strength. The primary mechanical property shall be Flexural Strength for build-up thicknesses 0.63 mm or above, and Tensile Strength for build-up thicknesses below 0.63 mm. The Secondary Property shall be flammability.

Exception: If reducing the minimum laminate thickness and/or the minimum build-up thickness, for the flammability Secondary Property, testing of the minimum laminate thickness is representative of the minimum build-up thickness at the same or thicker thicknesses.

10.1.7 The established minimum individual sheet thickness for ultrathin laminate and/or prepreg materials may be reduced by performing 2 point thermal aging, if the established build-up thickness remains the same. Testing shall be as described in Table 10.4 and the Standard for Polymeric Materials – Long Term Property Evaluations, UL 746B. The Primary Property shall be mechanical strength and shall be investigated at the established minimum build-up thickness. Flexural Strength shall be performed for build-up thicknesses 0.63 mm or above, and Tensile Strength shall be performed for build-up thicknesses below 0.63 mm. The Secondary Property shall be flammability. Performance profile testing is not required.

10.2 UL/ANSI ultrathin laminates and prepreg

10.2.1 General

10.2.1.1 Thickness and generic Relative Thermal Indices are shown in Table 10.2. All UL/ANSI type materials must comply with the minimum electrical and mechanical RTI's listed in Table 10.2 and may not exceed the electrical and mechanical RTI's listed in Table 7.3.

Documents
Document Sharing Hub
Full document details: UL 746E 2022

Table 10.2
Ultrathin Laminates and Prepreg Generic Relative Thermal Index

UL/ANSI type	Individual sheets and build-up nominal thickness[a]		Individual sheets and build-up relative thermal index	
	mm	(Mils)	Electrical (°C)	Mechanical (°C)
G-10	0.05 – 0.16	(2 – 6)	110	a
G-10	0.17 – 0.37	(7 – 14)	120	a
G-10	0.38 – 0.62	(15 – 24)	130	130
FR-4.0	0.05 – 0.09	(2 – 3)	90	90
FR-4.0	0.10 – 0.37	(4 – 14)	120	a
FR-4.0	0.38 – 0.62	(15 – 24)	130	130
FR-4.1	0.05 – 0.09	(2 – 3)	90	90
FR-4.1	0.10 – 0.37	(4 – 14)	120	a
FR-4.1	0.38 – 0.62	(15 – 24)	130	130
FR-5	0.38 – 0.62	(15 – 24)	140	140
FR-15.0	0.05 – 0.09	(2 – 3)	90	90
FR-15.0	0.10 – 0.37	(4 – 14)	120	120
FR-15.0	0.38 – 0.62	(15 – 24)	130	130
FR-15.1	0.05 – 0.09	(2 – 3)	90	90
FR-15.1	0.10 – 0.37	(4 – 14)	120	120
FR-15.1	0.38 – 0.62	(15 – 24)	130	130
GPY	0.05 – 0.37	(2 – 14)	140	a
GPY	0.38 – 0.62	(15 – 24)	140	160
CEM-3.0	0.10 – 0.47	(4 – 18)	120	a
CEM-3.0	0.48 – 0.62	(19 – 24)	130	130
CEM-3.1	0.10 – 0.47	(4 – 18)	120	a
CEM-3.1	0.48 – 0.62	(19 – 24)	130	130

NOTE – Relative thermal index investigated in accordance with 10.2.1.2, 10.2.4, and Table 10.4.

[a]The mechanical rating shall be that of the final buildup thickness.

10.2.1.2 When a higher electrical Relative Thermal Index than shown in Table 10.2 is desired for the material, the measurement of electrical characteristics (dielectric strength) shall also be required as a Primary Property. The electrical and mechanical Primary Properties shall be performed with the same 2-point thermal aging, using samples as described in 10.2.2.4. Sample requirements are shown in Table 10.4. The electrical Relative Thermal Index to be assigned is determined as described in 9.5.

10.2.1.3 The performance profile indexing tests shown in Table 10.3 shall be performed using declad samples built up to the same minimum evaluation thickness used for the 2-point thermal aging. The samples shall be built up using the minimum individual sheet thickness for which evaluation is desired.

Exception: The performance profile index tests shown in Table 10.3 do not need to be repeated to reduce the individual sheet thickness if the minimum build-up thickness is not reduced.

Documents
Document Sharing Hub

Full document details: UL 746E 2022

Table 10.3
Ultrathin Industrial Laminate and Prepreg Indexing Tests and Sample Requirements

Property	Sample dimensions length by width mm (inch)	Nominal thickness mm (inch)	Minimum number of samples	Applicable materials	For method refer to
Mechanical property					
Tensile strength (Bias cut for reinforced materials or Transverse cut for unreinforced materials, see Figure 7.1)	250 x 25 (10 x 1)	0.38 (0.015)	10	All	UL 746A and ASTM D 882 (Method A)
	250 x 25 (10 x 1)	Minimum	10	All	UL 746A and ASTM D 882 (Method A)
Tensile strength (Machine cut, see Figure 7.1)	250 x 25 (10 x 1)	0.38 (0.015)	10	All	UL 746A and ASTM D 882 (Method A)
	250 x 25 (10 x 1)	Minimum	10	All	UL 746A and ASTM D 882 (Method A)
Electrical property					
High current arc ignition (HAI)	125 x 13 (5 x 0.5)	0.38 (0.015)	10	All	UL 746A
	125 x 13 (5 x 0.5)	Minimum	10	All	UL 746A
Hot wire ignition (HWI)	125 x 13 (5 x 0.5)	0.38 (0.015)	5	All	UL 746A
	125 x 13 (5 x 0.5)	Minimum	5	All	UL 746A
Flammability property					
Flammability vertical	125 x 13 (5 x 0.5)	0.38 (0.015)	20	All	8.4, UL 94
	125 x 13 (5 x 0.5)	Minimum	20	All	8.4, UL 94
Flammability horizontal	125 x 13 (5 x 0.5)	0.38 (0.015)	6	All	8.4, UL 94
	125 x 13 (5 x 0.5)	Minimum	6	All	8.4, UL 94

NOTES –

1 The samples shall be prepared declad by completely etching a metal clad sheet, where applicable.

2 All samples are to be built up to 0.38 mm (0.015 in) thickness and the minimum thickness to be evaluated using the minimum laminate and prepreg sheet thickness shown in Table 10.2.

3 Vertical or horizontal flammability testing shall be performed based on the requested flammability rating or the reference UL/ANSI material in accordance with Table 8.2.

4 ASTM D 882 is the Standard Test Methods for Tensile Properties of Thin Plastic Sheeting.

10.2.2 UL/ANSI Ultrathin materials built up to 0.8 mm or greater

10.2.2.1 For ultrathin materials, built up to a thickness of 0.8 mm (0.031 inch) or greater using the laminate and prepreg sheet thicknesses referenced in Table 10.2, no testing shall be required, provided they contain the same material constituents as the previously evaluated FR-4.0, FR-4.1, G-10, CRM, CEM-

AVA Documents
Document Sharing Hub
Full document details: UL 746E 2022

3, or FR-5 laminate in accordance with the abbreviated test program, Section 8. The material shall be assigned the Relative Thermal Index shown in Table 10.2 for the corresponding laminate or prepreg sheet thickness.

10.2.2.2 For ultrathin materials, built up to a thickness of 0.8 mm (0.031 inch) or greater using laminate and prepreg sheet thicknesses less than those referenced in Table 10.2, testing shall be required as described in 10.2.2.3 – 10.2.2.6.

10.2.2.3 Two-point aging is required. The Primary Property shall be mechanical strength. The mechanical strength property to be investigated shall be flexural strength.

10.2.2.4 Candidate samples shall be the minimum build-up thickness using the minimum individual sheet thicknesses for which evaluation is desired.

10.2.2.5 Control samples shall be 0.8 mm (0.031 inch), built-up from the thickness of individual sheets as limited by Table 10.2.

10.2.2.6 Thermal aging is to be conducted at 170°C and 180°C for FR-4.0, FR-4.1, G-10, and CEM-3 material, 210°C and 225°C for GPY material, and 200°C and 210°C for FR-5 material.

10.2.3 UL/ANSI Ultrathin materials built up to 0.38 – 0.8 mm

10.2.3.1 For ultrathin materials built up to a thickness of 0.38 – 0.8 mm (0.015 – 0.031 inch) using laminate and prepreg sheet thicknesses referenced in Table 10.2, testing shall be required as described in 10.2.3.2 – 10.2.3.4.

10.2.3.2 Performance profile indexing is required. Testing shall be as described in Table 10.3.

10.2.3.3 Samples shall be the minimum build-up desired using the minimum individual sheet thickness desired.

10.2.3.4 At the conclusion of the performance indexing tests, the material shall be assigned the Relative Thermal Index shown in Table 10.2 for the build-up thickness of the corresponding laminate sheet thicknesses.

Exception: For CEM-3 material, the test sample shall be built up to a thickness of 0.48 – 0.61 mm (0.019 – 0.024 inch).

10.2.3.5 For ultrathin materials built up to a thickness of 0.38 – 0.8 mm (0.015 – 0.031 inch) using laminate and prepreg sheet thicknesses less than those referenced in Table 10.2, testing shall be required as described in 10.2.3.6 – 10.2.3.9.

10.2.3.6 Two-point aging and performance profile indexing is required. Testing shall be as described in Table 10.3 and Table 10.4. The Primary Property shall be mechanical strength. The mechanical strength property to be investigated shall be tensile strength.

Documents
Document Sharing Hub
Full document details: UL 746E 2022

Table 10.4
Ultrathin Industrial Laminate and Prepreg Thermal Aging Sample Requirements

Property	Sample dimensions length by width mm (inch)	Nominal thickness mm (inch)	Minimum number of samples	Applicable materials	For method refer to
Mechanical property					
4-Point thermal aging tensile strength (Bias cut only, see Figure 7.1)	250 x 25 (10 x 1)	0.38 (0.015)	400	All	UL 746B and ASTM D 882 (Method A)
2-Point thermal aging tensile strength (Bias cut only, see Figure 7.1)	250 x 25 (10 x 1)	Minimum	200	All	UL 746B and ASTM D 882 (Method A)
Electrical property					
4-Point thermal aging dielectric strength	100 x 100 (4 x 4)	0.38 (0.015)	400	All	UL 746B
2-Point thermal aging dielectric strength	100 x 100 (4 x 4) (4 x 4)	Minimum	200	All	UL 746B
Flammability property					
Secondary property flammability	125 x 13 (5 x 0.5) (5 x 0.5)	Minimum	60	All	UL 746B

NOTES –

1 If the material is a UL/ANSI Type designation, 2-Point thermal aging is only required to reduce the built up thickness below 0.38 mm (0.015 inch). See Section 10.2.4.

2 If a 4-Point Dielectric Strength thermal aging program has been conducted at 1.6 mm (0.062 inch) and/or 0.8 mm (0.031 inch), a 2-Point Dielectric Strength thermal aging program shall be conducted at 0.38 mm (0.015 inch) and below.

3 Dry Dielectric Strength thermal aging testing is required. In addition, Wet Dielectric Strength thermal aging testing is required if humidity conditioning after aging will result in more severe physical and thermal damage to the material (hygroscopic material). Hygroscopic materials shall be cooled in a desiccator to prevent moisture absorption.

4 The samples shall be prepared declad by completely etching a metal clad sheet, where applicable.

5 The Control samples are to be built up to 0.38 mm (0.015 in) thickness using the minimum laminate and prepreg thickness shown in Table 10.2, and the Candidate samples are to be built up to the minimum thickness to be evaluated using the minimum laminate and prepreg sheet thickness requested.
Exception: The control sample build-up thickness may be less than 0.38 mm if the thinner thickness was previously evaluated with a long term thermal aging program to establish the relative thermal index.

6 ASTM D 882 is the Standard Test Methods for Tensile Properties of Thin Plastic Sheeting.

10.2.3.7 Candidate samples shall be the minimum build-up thickness using the minimum individual sheet thicknesses for which evaluation is desired.

10.2.3.8 Control samples shall be 0.38 mm (0.015 inch) thick, built-up from the thickness of individual sheets as limited by Table 10.2.

10.2.3.9 Thermal aging is to be conducted at 170°C and 180°C for FR-4.0, FR-4.1, G-10, and CEM-3 material, 210°C and 225°C for GPY material, and 200°C and 210°C for FR-5 material.

Documents
Document Sharing Hub
Full document details: UL 746E 2022