UL 795

STANDARD FOR SAFETY

Commercial-Industrial Gas Heating Equipment

Documents
Document Sharing Hub

Full document details: UL 795 2020

Documents
Document Sharing Hub

Full document details: UL 795 2020

UL Standard for Safety for Commercial-Industrial Gas Heating Equipment, UL 795

Eighth Edition, Dated December 2, 2016

Summary of Topics

This revision of UL 795 dated September 29, 2020 includes editorial corrections to an equation in paragraph 56.1.5 and a table reference in paragraph 43.2. The revisions published on September 1, 2020 which included changes in requirements for gas vent valve and lines in paragraphs 26.9 and 34.5 are still identified.

Text that has been changed in any manner or impacted by UL's electronic publishing system is marked with a vertical line in the margin.

The new and revised requirements are substantially in accordance with Proposal(s) on this subject dated March 27, 2020 and June 5, 2020.

All rights reserved. No part of this publication may be reproduced, stored in a retrieval system, or transmitted in any form by any means, electronic, mechanical photocopying, recording, or otherwise without prior permission of UL.

UL provides this Standard "as is" without warranty of any kind, either expressed or implied, including but not limited to, the implied warranties of merchantability or fitness for any purpose.

In no event will UL be liable for any special, incidental, consequential, indirect or similar damages, including loss of profits, lost savings, loss of data, or any other damages arising out of the use of or the inability to use this Standard, even if UL or an authorized UL representative has been advised of the possibility of such damage. In no event shall UL's liability for any damage ever exceed the price paid for this Standard, regardless of the form of the claim.

Users of the electronic versions of UL's Standards for Safety agree to defend, indemnify, and hold UL harmless from and against any loss, expense, liability, damage, claim, or judgment (including reasonable attorney's fees) resulting from any error or deviation introduced while purchaser is storing an electronic Standard on the purchaser's computer system.

Documents
Document Sharing Hub

Full document details: UL 795 2020

No Text on This Page

Documents
Document Sharing Hub

Full document details: UL 795 2020

DECEMBER 2, 2016
(Title Page Reprinted: September 29, 2020)

UL 795

Standard for Commercial-Industrial Gas Heating Equipment

First Edition – November, 1952
Second Edition – October, 1964
Third Edition – April, 1973
Fourth Edition – June, 1994
Fifth Edition – July, 1999
Sixth Edition – October, 2006
Seventh Edition – April, 2011

Eighth Edition

December 2, 2016

This UL Standard for Safety consists of the Eighth Edition including revisions through September 29, 2020.

The Department of Defense (DoD) has adopted UL 795 on January 27, 1992. The publication of revised pages or a new edition of this Standard will not invalidate the DoD adoption.

Comments or proposals for revisions on any part of the Standard may be submitted to UL at any time. Proposals should be submitted via a Proposal Request in UL's On-Line Collaborative Standards Development System (CSDS) at https://csds.ul.com.

UL's Standards for Safety are copyrighted by UL. Neither a printed nor electronic copy of a Standard should be altered in any way. All of UL's Standards and all copyrights, ownerships, and rights regarding those Standards shall remain the sole and exclusive property of UL.

COPYRIGHT © 2020 UNDERWRITERS LABORATORIES INC.

Documents
Document Sharing Hub

Full document details: UL 795 2020

No Text on This Page

Documents
Document Sharing Hub

Full document details: UL 795 2020

CONTENTS

INTRODUCTION

1 Scope 7
2 Glossary 7
3 Units of Measurement 14
4 Undated References 14
5 Components 14

CONSTRUCTION – MECHANICAL

6 General 14
7 Corrosion Protection 15
8 General Components and Devices 15

CONSTRUCTION – ELECTRICAL

9 General 16
10 Servicing and Adjustment 16
11 Electrical Enclosures 17
12 Field Wiring Connections 26
13 Internal Wiring 29
14 Separation of Circuits 32
15 Mounting of Components 33
16 Motors and Motor Overcurrent or Overload Protection 34
17 Overcurrent Protection of High-Voltage Control-Circuit Conductors 38
17.1 General 38
17.2 Tapped high-voltage control circuits 38
17.3 Overcurrent-protective devices 39
18 Overcurrent Protection of Transformers 39
18.1 High-voltage transformers 39
18.2 Thermal protection 40
18.3 Low-voltage transformers 41
18.4 Overcurrent protective devices 41
19 Switches and Controllers 41
20 Capacitors 42
21 Electrical Insulating Material 43
22 Spacings – High-Voltage Circuits 43
23 Spacings – Low-Voltage Circuits 44
24 Accessibility of Uninsulated Live Parts 45
25 Bonding For Grounding 46

CONSTRUCTION – BURNER ASSEMBLIES

26 General 49
27 Combination Gas-Oil Burner Assemblies 50

CONSTRUCTION – BOILERS, FURNACES AND HEATERS

28 General 50
29 Accessibility 51
30 Baffles 52
31 Limit Controls 52

AVA Documents
Document Sharing Hub
Full document details: UL 795 2020

31.1 General 52
31.2 Liquid level limit controls – boilers 53
31.3 Pressure limit controls – boilers 53
31.4 Temperature limit controls – boilers 54
31.5 Temperature limit controls – warm air furnaces and heaters 55
32 Installation of External Controls and Fittings on Boilers 55
33 Flue Dampers, Draft Regulators, and Draft Hoods 56
34 Bleeds and Vents 57
35 Bases 58
36 Heating Surfaces and Combustion Chambers 58
37 Radiation Shields 58
38 Materials in Air Handling Compartments 58
39 Casings 59
40 Fuel Lines and Components 60
41 Flue Collars 60
42 Air Filters 60

PERFORMANCE

43 General 60
44 Test Installations 62
44.1 Floor-mounted devices 62
44.2 Suspended furnaces 62
44.3 Unit heaters 66
44.4 Test ducts for furnaces 67
45 Test Methods 67
45.1 Firing conditions 67
45.2 Temperature measurements 67
46 Burner Assembly Tests 70
46.1 Combustion test 70
46.2 Combustion air failure test 73
46.3 Undervoltage test 74
46.4 Power interruption test 74
46.5 Pilot supervision test 75
46.6 Ignition, gas-electric high tension test 76
46.7 Ignition, gas-electric hot-wire – Undervoltage test 76
46.8 Ignition, gas-electric hot-wire – Igniter endurance test 77
46.9 Ignition, gas-electric hot-wire – Temperature test 77
46.10 Ignition, multiple burner test 77
46.11 Delayed ignition test 78
47 Operation Tests 78
47.1 Device limit control cutout test 78
47.2 Continuity of operation for furnaces and heaters test 79
47.3 Air flow of horizontal furnaces test 80
48 Temperature Tests 80
48.1 General 80
48.2 Continuous operation test 84
48.3 Blocked inlet of furnaces and heaters test 84
48.4 Fan failure of furnaces and heaters test 85
48.5 Blocked outlet of furnaces and duct-connected heaters test 85
49 Low Water Cutoff of Boilers Test 85
50 Short-Circuit Test 86
51 Overload Test, High-Voltage Transformers 88
52 Burnout Test, High-Voltage Transformers 88
53 Dielectric Voltage-Withstand Test 89
54 Draft Hood Equipped Devices 90

AVA Documents
Document Sharing Hub
Full document details: UL 795 2020

54.1 Blocked outlet test 90
54.2 Downdrafts and updrafts test 90
54.3 Spillage test 91
54.4 Draft hood strength test 93
54.5 Condensing-type devices 93
55 Blocked Outlet of Forced or Induced Draft Equipped Condensing Appliances Test 93
56 Direct Vent Tests 94
56.1 Direct vent system leakage test 94
56.2 Direct vent wind tests 96
56.3 Direct vent rain test 96
56.4 Direct vent load test 97
56.5 Direct vent impact test 97
57 Flame Test 100
58 Strain Relief Test 101

OUTDOOR-USE EQUIPMENT

59 General 101
60 Enclosures 101
61 Field Wiring Connections 103
62 Wiring 103
63 Outdoor-Use Equipment Tests 104
63.1 General 104
63.2 Rain test 104
63.3 Wind test 107
64 Gaskets 108
65 Chromic Acid Dropping Test 109

MANUFACTURING AND PRODUCTION TESTS

66 General 110

MARKINGS

67 General 111

INSTRUCTIONS

68 General 114

Documents
Document Sharing Hub
Full document details: UL 795 2020

No Text on This Page

Documents
Document Sharing Hub

Full document details: UL 795 2020

INTRODUCTION

1 Scope

1.1 These requirements apply to factory-built gas appliances having inputs of more than 400,000 Btu per hour, per individual combustion chamber which require flame failure and other precautions and which are intended primarily for commercial and industrial installation. The appliances covered by these requirements are comfort heating furnaces, heaters and gas-fired boiler assemblies except watertube boilers having outputs of 10,000 pounds of steam per hour or more.

1.2 These requirements also apply to all high pressure steam and high temperature water gas-fired boiler assemblies regardless of Btu per hour input.

1.3 Gas-heating equipment covered by these requirements may be operated without a competent attendant being constantly on duty at the burners while the appliances are in operation.

1.4 Additional installation and operation requirements are available for central-heating gas appliances, floor furnaces, room heaters, unit heaters, and water heaters as defined by the National Fuel Gas Code, NFPA 54, and by the Liquefied Petroleum Gas Code, NFPA 58, as applicable.

2 Glossary

2.1 For the purposes of this Standard the following definitions apply.

2.2 AIR HEATER – An indirect fired vented appliance intended to supply heated air for space heating and other purposes, but not intended for permanent installation.

2.3 AIR SHUTTER – An adjustable device for varying the size of the air inlet or inlets regulating primary or secondary air.

2.4 AIR SHUTTER, AUTOMATICALLY OPERATED – An air shutter operated by an automatic control.

2.5 AIR SHUTTER, MANUALLY OPERATED – An air shutter manually set and locked in the desired position.

2.6 APPLIANCE FLUE – The flue passages within an appliance.

2.7 ALUMINUM COATED STEEL – An aluminum coated steel in which the bond between the steel and the aluminum is an iron-aluminum alloy.

2.8 BAFFLE – An object placed in an appliance to direct the flow of air or flue gases.

2.9 BASE – The main supporting frame or structure of the assembly, exclusive of legs.

2.10 BOILER –A closed vessel in which water or some other liquid is heated or steam is generated or superheated, under pressure or vacuum, by direct application of heat.

2.11 BOILER, HIGH PRESSURE STEAM – A boiler in which steam is generated at a pressure higher than 15 psig (103 kPa).

2.12 BOILER, HIGH TEMPERATURE WATER – A boiler intended for operation at a pressure exceeding 160 psig (1103 kPa) and at a temperature exceeding or at a temperature exceeding 250°F (121°C).

AVA Documents
Document Sharing Hub
Full document details: UL 795 2020

2.13 BOILER, HOT WATER – A boiler that furnishes hot water at a pressure not exceeding 160 psig (1103 kPa) and at a temperature not exceeding 250°F (121°C).

2.14 BOILER, LOW PRESSURE STEAM – A boiler in which steam is generated at a pressure not exceeding 15 psig (103 kPa).

2.15 BURNER GAS – A device for the final conveyance of the gas, or a mixture of gas and air, to the combustion zone.

2.16 BURNER, AUTOMATICALLY LIGHTED – One where fuel to the main burner is normally turned on and ignited automatically.

2.17 BURNER, MANUALLY LIGHTED – One where fuel to the main burner is turned on only by hand and ignited under supervision.

2.18 BURNER HEAD, GAS – That portion of a burner beyond the outlet end of the mixer tube which contains the ports.

2.19 CASING – An enclosure forming the outside of the appliance, no parts of which are likely to be subjected to intense heat.

2.20 CHIMNEY CONNECTOR – The pipe which connects a fuel burning appliance to a chimney.

2.21 COMBUSTIBLE MATERIAL – Combustible material, as pertaining to materials adjacent to or in contact with heat producing appliances, chimney connectors and vent connectors, steam and hot water pipes, and warm air ducts, means material made of or surfaced with wood, compressed paper, plant fibers, or other material that will ignite and burn. Such material shall be considered as combustible even though flameproofed, fire retardant treated, or plastered.

2.22 COMBUSTION – As used herein, the rapid oxidation of fuel accompanied by the production of heat, or heat and light. Complete combustion of a fuel is possible only in the presence of an adequate supply of oxygen.

2.23 COMBUSTION CHAMBER – The portion of an appliance within which combustion occurs.

2.24 COMBUSTION DETECTOR – That part of a primary safety control which is responsive directly to flame properties.

2.25 COMBUSTION PRODUCTS – Constituents resulting from the combustion of a fuel with the oxygen of the air, including the inerts, but excluding excess air.

2.26 CONDENSATE – The liquid which separates from a gas, including flue gases, due to a reduction in temperature.

2.27 CONTROL – A device designed to regulate the fuel, air, water, or electrical supply to the controlled equipment. It may be automatic, semi-automatic, or manual.

2.28 CONTROL INPUT, COMBUSTION – A control which automatically regulates the firing rate at predetermined air-fuel ratio in accordance with load demand. It may be a type which positions the air and fuel supplies for low fire and for high fire as required to meet the load demands, or it may be a modulating type which gradually varies the air and fuel supplies within limits to meet the load demand.

Documents
Document Sharing Hub
Full document details: UL 795 2020

2.29 CONTROL, HIGH LIMIT – A protective (safety) control that is responsive to changes in pressure, temperature, liquid level, or flow. It is to be set beyond the intended operating range of the controlled equipment to limit its operation. This control may be electrical or mechanical in nature.

2.30 CONTROL, OPERATING LIMIT – A limit control to start fuel input according to demand and to stop fuel input on satisfaction of demand. An operating limit control may be electrical or mechanical in nature.

2.31 CONTROL, PROTECTIVE (SAFETY) – Automatic controls and interlocks (including relays, switches, and other auxiliary equipment used in conjunction with a safety control circuit) which are intended to prevent operation of the controlled equipment under conditions not anticipated by the design. A control intended to prevent the risk of electric shock, fire, or injury to persons during abnormal operation of the appliance. An example would be a water temperature limit control. A protective control always provides Type 2 action. (See 2.93).

2.32 CONTROL, PRIMARY SAFETY – An automatic control that monitors the operation of a gas-fired or an oil-fired burner. It normally consists of the following sections that may be integrated into a common unit or may be separate units, interconnected by wiring:

a) Programming Unit – A device that programs the burner through start-up and shutdown operations in response to signals from regulating, limiting, and monitoring devices. It also provides the timings, as required, in proper sequence, for purging, flame establishing periods and in case of ignition or flame failure, for safety shutdown (lockout).

b) Combustion Detector – A device that is responsive to flame properties. It monitors the flame at the point of flame supervision and transmits a signal to the programming unit, indicating absence or presence of flame.

2.33 DAMPER – A valve or plate for regulating draft or flow of the flue gases. A damper is generally considered as being located on the downstream side of the combustion chamber, usually in a flue passage of the appliance or in the chimney or vent connector.

2.34 DAMPER, AUTOMATICALLY OPERATED – A damper operated by an automatic control.

2.35 DAMPER, MANUALLY OPERATED – An adjustable damper manually set and locked in the desired position.

2.36 DIRECT FIRED APPLIANCE – A device in which combustion products (flue gases) are mixed with the medium, e.g., air, being heated.

2.37 DRAFT REGULATOR, BAROMETRIC – A device which functions to maintain a desired draft by automatically reducing the chimney draft to the desired value.

2.38 ELECTRICAL CIRCUITS:

a) High-Voltage Circuit – A circuit involving a potential of not more than 600 volts and having circuit characteristics in excess of those of a low-voltage circuit.

b) Low-Voltage Circuit – A circuit involving a potential of not more than 30 volts alternating current (42.4 peak) or direct current and supplied by a primary battery or by a standard Class 2 transformer or other suitable transforming device, or by a suitable combination of transformer and fixed impedance having output characteristics in compliance with what is required for a Class 2 transformer. A circuit derived from a source of supply classified as a high-voltage circuit, by connecting resistance in series with the supply circuit as a means of limiting the voltage and current, is not considered to be a low-voltage circuit.

Documents
Document Sharing Hub
Full document details: UL 795 2020

c) Isolated Limited Secondary Circuit – A circuit of limited energy derived from an isolated secondary winding of a transformer having a maximum capacity of 100 volt-amperes (VA) and open-circuit secondary voltage rating not exceeding 1000 volts.

d) Safety Control Circuit – A circuit involving one or more safety controls.

2.39 EXCESS AIR – Air which passes through the combustion chamber and the appliance flues in excess of that which is theoretically required for complete combustion.

2.40 FLAME SAFEGUARD – See Control, Primary Safety, 2.31.

2.41 FLUE COLLAR – That portion of an appliance designed for attachment of the chimney or vent connector.

2.42 FLUE GASES – Combustion products and excess air.

2.43 FURNACE, CENTRAL, WARM AIR – A self-contained indirect fired appliance designed to supply heated air through ducts to spaces remote from or adjacent to the appliance location.

2.44 FURNACE, FORCED-AIR TYPE, CENTRAL – A central furnace equipped with a fan or blower which provides the primary means for circulation of air.

2.45 FURNACE, DOWNFLOW – A forced-air type central furnace designed with air flow through the furnace essentially in a vertical path, discharging air at or near the bottom of the furnace.

2.46 FURNACE, DUCT – A central furnace designed for installation in a duct of an air distribution system to supply warm air for heating and which depends for air circulation on a blower not furnished as part of the furnace.

2.47 FURNACE, HORIZONTAL – A forced-air type central furnace designed with air flow through the furnace essentially in a horizontal path.

2.48 FURNACE, UPFLOW – A central furnace designed with air flow through the furnace essentially in a vertical path, discharging air at or near the top of the furnace.

2.49 GAS VENT – The piping and fittings for conveying flue gases to the outside atmosphere.

2.50 HEAT EXCHANGER, DIRECT – A heat exchanger in which heat generated in the combustion chamber of the device is transferred direct through walls of the heat exchanger to the heating medium such as air, steam, or water, held in close contact with the combustion-chamber walls. It is a self-contained combustion and heat-transfer device, hence a direct heat-transfer device.

2.51 HEAT EXCHANGER, INDIRECT – A heat exchanger which encloses or contains a heating medium such as air, steam, or water, the heat from which is transferred to another heating medium separately contained in close contact with or directed through the heat exchanger. It is an indirect heat-transfer device.

2.52 HEATING SURFACES – All surfaces which transmit heat directly from flame or flue gases to the medium to be heated.

2.53 IGNITION, CONTINUOUS – Ignition by an energy source which is continuously maintained through the time the burner is in service, whether the main burner is firing or not.

Documents
Document Sharing Hub
Full document details: UL 795 2020

2.54 IGNITION, INTERMITTENT – Ignition by an energy source which is continuously maintained through the time the burner is firing.

2.55 IGNITION, INTERRUPTED – Ignition by an energy source which is automatically energized each time the main burner is fired and subsequently is automatically shut off during the firing cycle.

2.56 IGNITION, MANUAL – Ignition by an energy source which is manually energized and where the fuel to the pilot is lighted automatically when the ignition system is energized.

2.57 INDIRECT-FIRED DEVICE – A device designed so that combustion products (flue gases) are not mixed in the device with the medium, e.g., air, being heated.

2.58 INTERLOCK – A control to prove the physical state of a required condition, and to furnish that proof to the primary safety control circuit.

2.59 LINER – See Radiation Shield, 2.84.

2.60 LINING – Those interior surfaces of a combustion chamber which are exposed to combustion during use of the device.

2.61 LIQUEFIED-PETROLEUM GAS – Fuel gases, including commercial propane, predominantly propane or propylene or commercial butane, predominantly butane, isobutane, and/or butylene.

2.62 LP-GAS AIR MIXTURE – Liquefied-petroleum gases distributed at relatively low pressures and normal atmospheric temperatures which have been diluted with air to produce desired heating value and utilization characteristic.

2.63 MAIN BURNER FLAME-ESTABLISHING PERIOD – The interval of time the main burner fuel safety shutoff valves are permitted to be open before the primary safety control is required to supervise the main burner flame.

2.64 MANIFOLD – The conduit of a device which supplies gas to the individual burner.

2.65 MIXER, GAS – The combination of mixer head, mixer throat, and mixer tube.

a) Mixer Head – That portion of an injection type burner, usually enlarged, into which primary air flows to mix with the gas stream.

b) Mixer Throat – That portion of the mixer which has the smallest cross-sectional area and which lies between the mixer head and the mixer tube.

c) Mixer Tube – That portion of the mixer which lies between the throat and the burner head.

2.66 MIXER FACE, GAS – The air inlet end of the mixer head.

2.67 NORMAL CARE – The periodic tasks usually performed to operate and maintain an appliance, such as air, fuel, pressure, and temperature regulation, cleaning, lubrication, and resetting of controls.

2.68 ORIFICE – The opening in a cap, spud, or other device whereby the flow of gas is limited and through which the gas is discharged to a burner.

2.69 ORIFICE CAP (HOOD) – A movable fitting having an orifice which permits adjustment of the flow of gas by the changing of its position with respect to a fixed needle or other device.

Documents
Document Sharing Hub
Full document details: UL 795 2020

2.70 ORIFICE SPUD – A removable plug or cap containing an orifice and which permits adjustment of the flow of gas either by substitution of a spud with a different sized orifice or by the motion of a needle with respect to it.

2.71 PILOT, CONTINUOUS – A pilot that burns without turn-down throughout the entire time the burner assembly is in service, whether the main burner is firing or not.

2.72 PILOT, EXPANDING – A pilot that burns throughout the entire time the burner assembly is in service, whether the main burner is firing or not. Upon a call for heat, the pilot is automatically expanded so as to reliably ignite the main burner. This pilot may be turned down automatically at the end of main burner flame-establishing period.

2.73 PILOT FLAME-ESTABLISHING PERIOD – The interval of time fuel is permitted to be delivered to a proved pilot before the primary safety control is required to detect pilot flame.

2.74 PILOT, INTERMITTENT – A pilot which is automatically lighted each time there is a call for heat, if burns during the entire period that the main burner is firing.

2.75 PILOT, INTERRUPTED – A pilot which is automatically lighted each time there is a call for heat. The pilot fuel is cut off automatically at the end of the main burner flame-establishing period.

2.76 PILOT, PROVED – A pilot flame supervised by a primary safety control.

2.77 PLENUM – An air compartment, part of a distributing system, to which one or more ducts are connected.

a) Furnace Supply Plenum – A furnace plenum attached directly to, or an integral part of, the supply outlet of the furnace.

b) Furnace Return Plenum – A furnace plenum attached directly to, or an integral part of, the return air inlet of the furnace.

2.78 PORT – Any opening in a burner head through which fuel or an air-fuel mixture is discharged for ignition.

2.79 PRESSURE CUT-OUT – A pressure sensing control intended to keep a pressure below or above one particular value during abnormal operating conditions and which has no provisions for setting by the user.

2.80 PRIMARY AIR – The air introduced into a burner which mixes with the fuel before it reaches the ignition zone.

2.81 POST-PURGE PERIOD – The period of time after the fuel delivered to the burner is stopped and during which the burner motor or fan continues to run to supply air to the combustion chamber.

2.82 PREPURGE PERIOD – The period of time during the burner start-up in which air is introduced into the combustion chamber and the associated flue passages in such volume and manner as to completely replace the air or fuel-air mixture contained therein prior to initiating ignition.

2.83 PROOF OF CLOSURE SWITCH – A non-field adjustable switch installed in a safety shutoff valve by its manufacturer that activates only after the valve is fully closed.

2.84 RADIATION SHIELD – A separate panel or panels interposed between heating surfaces and adjacent objects to reduce heat transmission by radiation.

AVA Documents
Document Sharing Hub
Full document details: UL 795 2020

2.85 READILY ACCESSIBLE – Capable of being reached easily and quickly for operation, adjustment, and inspection.

2.86 REGULATOR, GAS-PRESSURE – A device for controlling and maintaining a uniform outlet gas pressure.

2.87 RESPONSE TIME – FLAME FAILURE – The interval between the occurrence of flame extinguishment and de-energizing the safety shutoff means.

2.88 SAFETY CONTROL – See Control, Safety, 2.31.

2.89 SAFETY SHUTDOWN – The action of shutting off all fuel and ignition energy to the device by means of a safety control or controls such that restart cannot be accomplished without manual reset.

2.90 SECONDARY AIR – The air externally supplied to the flame at the point of combustion.

2.91 THERMOSTAT – An automatic control actuated by temperature change to maintain temperatures between predetermined limits.

2.92 TOOLS, SPECIAL – Those tools that are not available on the open retail market.

2.93 TYPE 2 ACTION – Automatic action for which the manufacturing deviation and the drift of its operating value, operating time, or operating sequence have been declared and tested to the Standard for Automatic Electrical Controls – Part 1: General Requirements, UL 60730-1.

2.94 UNIT HEATER:

a) Low-Static Pressure Type – A self-contained, automatically controlled, vented fuel burning device having integral means for circulation of air, normally by a propeller fan (or fans). Such devices may be equipped with louvers or face extensions made in accordance with the manufacturer's approved specifications.

b) High-Static Pressure Type – A self-contained, automatically controlled, vented fuel burning device having integral means for circulation of air against 0.2 inch or greater static pressure and designed for installation in the space to be heated unless they are equipped with provisions for attaching both inlet and outlet air ducts.

2.95 VALVE, BURNER-INPUT CONTROL – An automatic-control valve for regulating the input of fuel to a burner.

2.96 VALVE, SAFETY SHUTOFF – A valve that is automatically closed by the safety control system or by an emergency device. Such valve may be of the automatic or manually opened type.

2.97 VALVE, LUBRICATED PLUG TYPE – A valve of the plug and barrel type designed for maintaining a lubricant between the bearing surfaces.

2.98 VALVE, MANUAL GAS SHUTOFF – A manually operated valve in a gas line for the purpose of completely turning on or shutting off the gas supply.

2.99 VENT CONNECTOR – The pipe which connects a gas-fired device to a gas vent or chimney.

2.100 ZERO GOVERNOR – A regulating device which is normally adjusted to deliver gas at atmospheric pressure within its flow rating.

AVA Documents
Document Sharing Hub

Full document details: UL 795 2020

3 Units of Measurement

3.1 Values stated without parentheses are the requirement. Values in parentheses are explanatory or approximate information.

4 Undated References

4.1 Any undated reference to a code or standard appearing in the requirements of this standard shall be interpreted as referring to the latest edition of that code or standard.

5 Components

5.1 Except as indicated in 5.2, a component of a product covered by this standard shall comply with the requirements for that component. See the individual sections of this Standard for component requirements.

5.2 A component is not required to comply with a specific requirement that:

a) Involves a feature or characteristic not required in the application of the component in the product covered by this standard, or

b) Is superseded by a requirement in this standard.

5.3 A component shall be used in accordance with its rating established for the intended conditions of use.

5.4 Specific components are incomplete in construction features or restricted in performance capabilities. Such components are intended for use only under limited conditions, such as certain temperatures not exceeding specified limits, and shall be used only under those specific conditions.

CONSTRUCTION – MECHANICAL

6 General

6.1 The requirements of 23.1 are not applicable to mechanical service functions which are not normally performed with the equipment energized.

6.2 Moving parts such as fan blades, blower wheels, pulleys, belts, etc., which may cause injury shall be enclosed or guarded.

6.3 If the removal of doors or panels or shields will expose such moving parts:

a) The opening or removal of the door, panel or shield shall require the use of tools; or

b) An interlocking device shall shut off the mechanism; or

c) A warning marking shall be displayed which reads essentially as follows:

DANGER – To Avoid Injury From Moving Parts, Shut Off The (Equipment) Before (Removing-Opening) This (Cover-Door).

6.4 The distance from an opening in a required guard or enclosure to the moving part mentioned in 6.3 shall be in accordance with the following table, but the minor dimension of the opening shall not in any case exceed 3 inches (76.2 mm). For an opening having a minor dimension intermediate between two of

AVA Documents
Document Sharing Hub
Full document details: UL 795 2020

the values included in the table, the distance from the opening to the moving part shall be not less than that found by appropriate interpolation between the corresponding values in the right hand column of the table. The minor dimension of the opening is determined by the largest hemispherically tipped cylindrical probe that can be inserted through the opening with a force of 5 pounds.

Minor dimensions of opening, inches[a]	Minimum distance from opening to moving part, inches
1/4	1/2
3/8	1-1/2
1/2	2-1/2
3/4	4-1/2
1	6-1/2
1-1/2	10-1/2
2	14-1/2
Over 2	30

[a] Openings less than 1/4 inch are not to be considered.

6.5 A moving part is not to be considered when judging compliance with 6.3 and 6.4 if the part is unlikely to be contacted through the opening because of fixed components, including baffles.

6.6 Parts that may come in contact with the operator's hand during normal adjustment or servicing shall be free from sharp projections or edges and projecting screw ends.

7 Corrosion Protection

7.1 Iron and steel parts shall be protected against corrosion by painting, galvanizing, plating or other equivalent means when malfunctioning of such unprotected part results in a hazardous condition.

Exception: Cast-iron parts, cast-aluminum parts and ASME coded pressure vessels are not required to be protected against corrosion.

7.2 Surfaces of the burner assembly and flue gas conveying parts that contact flue gas condensation shall be evaluated with respect to resistance to corrosion. Among the factors to be considered are material thickness and type, length of time subjected to the condensate condition and type of corrosion protection provided. See 50.4.

8 General Components and Devices

8.1 Wire connectors shall comply with the Standard for Wire Connectors, UL 486A-486B.

8.2 Thermoplastic wiring material shall comply with the Standard for Thermoplastic-Insulated Wires and Cables, UL 83.

8.3 Flexible cords and cables shall comply with the Standard for Flexible Cords and Cables, UL 62.

8.4 Fittings for conduit and/or metal clad cable shall comply with the Standard for Conduit, Tubing, Cable Fittings, UL 514B.

8.5 Fuseholders shall comply with the Standard for Fuseholders – Part 1: General Requirements, UL 4248-1, and the applicable Part 2 (e.g. UL 4248-9 for Class K).

Documents
Document Sharing Hub
Full document details: UL 795 2020

8.6 Fuses shall comply with the Standard for Low-Voltage Fuses – Part 1: General Requirements, UL 248-1; and the applicable UL 248 Part 2 (e.g. UL 248-5). Defined use fuses that comply with UL 248-1 and another applicable UL standard for fuses are considered to comply with this requirement.

8.7 Circuit breakers shall comply with the Standard for Molded-Case Circuit Breakers, Molded-Case Switches and Circuit-Breaker Enclosures, UL 489.

8.8 Terminal Blocks shall comply with the Standard for Terminal Blocks, UL 1059.

8.9 Electrical (Junction) boxes shall comply with the Standard for Metallic Outlet Boxes, UL 514A or the Standard for Nonmetallic Outlet Boxes, Flush-Device Boxes, and Covers, UL 514C, as applicable.

8.10 Attachment-plug receptacles intended for general use as a convenience receptacle on the equipment shall be of the grounding type, and shall comply with the Standard for Attachment Plugs and Receptacles, UL 498.

CONSTRUCTION – ELECTRICAL

9 General

9.1 Fuel confining parts, or operating parts if failure of the part will allow excess leakage of fuel, unintended operation, or restrict a safety device from functioning, shall be of sufficient strength, durability, and resistance to fire. Such parts shall be made of material having a melting point (solidus temperature) of not less than 950°F (510°C) and a tensile strength of not less than 10,000 psi at 400°F (204°C). Such parts shall not sag, distort, melt, oxidize, or show leakage of fuel during any of the tests specified herein.

9.2 Electrical equipment and wiring shall be arranged so that oil or water will not drip or run on them during normal usage or from a connection required to be uncoupled for servicing the device also to reduce the risk of contact with water from humidifiers.

9.3 Attachment plugs or separable connectors shall not be used in circuits when the breaking or making of the circuit by such devices may result in operation of the equipment in a manner that involves a risk of fire, electric shock, or injury to persons.

10 Servicing and Adjustment

10.1 Service functions which may have to be performed with the equipment energized include:

a) Adjusting the setting of temperature controls with or without marked dial settings;

b) Resetting control trip mechanism; operating manual switches;

c) Adjusting air-flow dampers.

A factory set and sealed control is not considered to be adjustable.

10.2 Adjustable or resettable electrical control or manual switching devices may be located or oriented with respect to uninsulated live parts so that manipulation of the mechanism for adjustment, resetting, or operation can be accomplished in the normal direction of access if uninsulated live parts or moving parts are:

a) Not located in front, in the direction of access of the mechanism; and

b) Are not located within 6 inches on any side or behind the mechanism, unless guarded.

AVA Documents
Document Sharing Hub
Full document details: UL 795 2020

10.3 An electrical control component which may require examination, adjustment, servicing, or maintenance while energized, not including voltage measurements, shall be located and mounted with respect to other components and with respect to grounded metal parts so that it is accessible for electrical service functions without subjecting the serviceman to the likelihood of risk of electric shock from adjacent uninsulated live parts or to the risk of injury from adjacent moving parts.

10.4 Components in a low-voltage circuit are to comply with the requirements of 10.3 in their relation to uninsulated live parts in a high-voltage circuit and to moving parts.

11 Electrical Enclosures

11.1 Uninsulated high-voltage parts shall be enclosed or guarded to reduce the likelihood of unintentional contact by persons during normal use of the equipment. This applies also to such parts located in a compartment into which access is required for normal care of the equipment, such as resetting controls, replacing filters, lubrication, cleaning, and the like.

11.2 Sheet metal complying with Table 11.1 and Table 11.2 whichever applies, meets the requirement for the individual enclosure of electrical components.

Table 11.1
Minimum thickness of sheet metal for enclosures carbon steel or stainless steel

Without supporting frame[a]		With supporting frame or equivalent reinforcing[a]		Minimum thickness in inches (mm)	
Maximum width[b] in inches (cm)	Maximum length[c] in inches (cm)	Maximum width[b] in inches (cm)	Maximum length in inches (cm)	Uncoated (MSG)	Metal coated (GSG)
4.0 (10.2)	Not limited	6.25 (15.9)	Not limited	0.020[d] (0.51)	0.023[d] (0.58)
4.75 (12.1)	5.75 (14.6)	6.75 (17.1)	8.25 (21.0)	(24)	(24)
6.0 (15.2)	Not limited	9.5 (24.1)	Not limited	0.026[d] (0.66)	0.029[d] (0.74)
7.0 (17.8)	8.75 (22.2)	10.0 (25.4)	12.5 (31.8)	(22)	(22)
8.0 (20.4)	Not limited	12.0 (30.5)	Not limited	0.032 (0.81)	0.034 (0.86)
9.0 (22.9)	11.5 (29.2)	13.0 (33.0)	16.0 (40.6)	(20)	(20)
12.5 (31.8)	Not limited	19.5 (49.5)	Not limited	0.042 (1.07)	0.045 (1.14)
14.0 (35.6)	18.0 (45.7)	21.0 (53.3)	25.0 (63.5)	(18)	(18)
18.0 (45.7)	Not limited	27.0 (68.6)	Not limited	0.053 (1.34)	0.056 (1.42)
20.0 (50.8)	25.0 (63.5)	29.0 (73.7)	36.0 (91.4)	(16)	(16)
22.0 (55.9)	Not limited	33.0 (83.8)	Not limited	0.060 (1.53)	0.063 (1.61)
25.0 (63.5)	31.0 (78.7)	35.0 (89.0)	43.0 (109.2)	(15)	(15)
25.0 (63.4)	Not limited	39.0 (99.1)	Not limited	0.067 (1.70)	0.070 (1.78)
29.0 (73.7)	36.0 (91.4)	41.0 (104.1)	51.0 (129.5)	(14)	(14)
33.0 (83.8)	Not limited	51.0 (129.5)	Not limited	0.080 (2.04)	0.084 (2.13)
35.0 (89.0)	47.0 (119.4)	54.0 (137.1)	66.0 (167.6)	(13)	(13)
42.0 (106.7)	Not limited	64.0 (162.6)	Not limited	0.093 (2.36)	0.097 (2.46)
47.0 (119.4)	59.0 (149.9)	68.0 (172.7)	84.0 (213.4)	(12)	(12)
52.0 (132.1)	Not limited	80.0 (203.2)	Not limited	0.108 (2.74)	0.111 (2.80)
60.0 (152.4)	74.0 (188.0)	84.0 (213.4)	103.0 (261.6)	(11)	(11)
63.0 (160.0)	Not limited	97.0 (246.4)	Not limited	0.123 (3.12)	0.126 0.126

Table 11.1 Continued on Next Page

Documents
Document Sharing Hub
Full document details: UL 795 2020

Table 11.1 Continued

Without supporting frame[a]		With supporting frame or equivalent reinforcing[a]		Minimum thickness in inches (mm)	
Maximum width[b] in inches (cm)	Maximum length[c] in inches (cm)	Maximum width[b] in inches (cm)	Maximum length in inches (cm)	Uncoated (MSG)	Metal coated (GSG)
73.0 (185.4)	90.0 (228.6)	103.0 (261.6)	127.0 (322.6)	(10)	(10) (3.20)

[a] A supporting frame is a structure of angle or channel or a folded rigid section of sheet metal which is rigidly attached to and has essentially the same outside dimensions as the enclosure surface and which has sufficient torsional rigidity to resist the bending moments which may be applied via the enclosure surface when it is deflected. Construction that is considered to have equivalent reinforcing may be accomplished by designs that will produce a structure which is as rigid as one built with a frame of angles or channels. Construction considered to be without supporting frame includes:

1) Single sheet with single formed flanges (formed edges),

2) A single sheet which is corrugated or ribbed, and

3) An enclosure surface loosely attached to a frame, e.g. with spring clips.

[b] The width is the smaller dimension of a rectangular sheet metal piece which is part of an enclosure. Adjacent surfaces of an enclosure may have supports in common and be made of a single sheet.

[c] For panels which are not supported along one side, e.g., side panels of boxes, the length of the unsupported side shall be limited to the dimensions specified unless the side in question is provided with a flange at least 1/2 inch (12.7 mm) wide.

[d] Sheet metal for an enclosure intended for outdoor use shall comply with 60.7 and 60.8.

Table 11.2
Minimum thickness of sheet metal for enclosures aluminum, copper, or brass

Without supporting frame[a]		With supporting frame or equivalent reinforcing[a]		
Maximum width[b] in inches (cm)	Maximum length[c] in inches (cm)	Maximum width[b] in inches (cm)	Maximum length in inches (cm)	Minimum thickness inches (mm) (AWG)
3.0 (7.6)	Not limited	7.0 (17.8)	Not limited	0.023[d] (22)
3.5 (8.9)	4.0 (10.2)	8.5 (21.7)	9.5 (24.1)	(0.58)
4.0 (10.2)	Not limited	10.0 (25.4)	Not limited	0.029 (20)
5.0 (12.7)	6.0 (15.2)	10.5 (26.7)	13.5 (34.2)	(0.74)
6.0 (15.2)	Not limited	14.0 (35.6)	Not limited	0.036 (18)
6.5 (16.5)	8.0 (20.4)	15.0 (38.1)	18.0 (45.7)	(0.91)
8.0 (20.4)	Not limited	19.0 (48.3)	Not limited	0.045 (16)
9.5 (24.1)	11.5 (29.2)	21.0 (53.3)	25.0 (63.5)	(1.14)
12.0 (30.5)	Not limited	28.0 (71.1)	Not limited	0.058 (14)
14.0 (35.6)	16.0 (40.6)	30.0 (76.2)	37.0 (94.0)	(1.47)
18.0 (45.7)	Not limited	42.0 (106.7)	Not limited	0.075 (12)
20.0 (50.8)	25.0 (63.4)	45.0 (114.3)	55.0 (139.7)	(1.91)
25.0 (63.4)	Not limited	60.0 (152.4)	Not limited	0.095 (10)
29.0 (73.7)	36.0 (91.4)	64.0 (162.6)	78.0 (198.1)	(2.41)
37.0 (94.0)	Not limited	87.0 (221.9)	Not limited	0.122 (8)
42.0 (106.7)	53.0 (134.6)	93.0 (236.2)	114.0 (289.6)	(3.10)
52.0 (132.1)	Not limited	123.0 (312.4)	Not limited	0.153 (6)
60.0 (152.4)	74.0 (188.0)	130.0 (330.2)	160.0 (406.4)	(3.89)

[a] A supporting frame is a structure of angle or channel or a folded rigid section of sheet metal which is rigidly attached to and has essentially the same outside dimensions as the enclosure surface and which has sufficient torsional rigidity to resist the bending

Table 11.2 Continued on Next Page

Documents
Document Sharing Hub
Full document details: UL 795 2020

Table 11.2 Continued

Without supporting frame[a]		With supporting frame or equivalent reinforcing[a]		
Maximum width[b] in inches (cm)	Maximum length[c] in inches (cm)	Maximum width[b] in inches (cm)	Maximum length in inches (cm)	Minimum thickness inches (mm) (AWG)
moments which may be applied via the enclosure surface when it is deflected. Construction that is considered to have equivalent reinforcing may be accomplished by designs that will produce a structure which is as rigid as one built with a frame of angles or channels. Construction considered to be without supporting frame includes: 1) Single sheet with single formed flanges (formed edges), 2) A single sheet which is corrugated or ribbed, and 3) An enclosure surface loosely attached to a frame, e.g. with spring clips. [b] The width is the smaller dimension of a rectangular sheet metal piece which is part of an enclosure. Adjacent surfaces of an enclosure may have supports in common and be made of a single sheet. [c] For panels which are not supported along one side, e.g., side panels of boxes, the length of the unsupported side shall be limited to the dimensions specified unless the side in question is provided with a flange at least 1/2 inch (12.7 mm) wide. [d] Sheet metal for an enclosure intended for outdoor use shall comply with 60.7 and 60.8.				

11.3 Among the factors taken into consideration when evaluating an enclosure are:

a) Mechanical strength;

b) Resistance to impact;

c) Moisture absorptive properties;

d) Combustibility;

e) Resistance to corrosion; and

f) Resistance to distortion at temperatures to which the enclosure may be subjected under conditions of normal or abnormal use.

For a nonmetallic enclosure or part of an enclosure, all these factors are considered with respect to thermal and chemical aging according to the requirements in the Standard for Polymeric Materials – Use in Electrical Equipment Evaluations, UL 746C. An enclosure complying with the requirements of the Standard for Industrial Control Panels, UL 508A, would be considered to comply with the requirements of (a) – (f).

11.4 Where the design and location of the component and the strength and rigidity of the outer cabinet warrant, an individual enclosure of thinner metal than specified in Table 11.1 or Table 11.2 whichever applies, may be employed.

11.5 Electrical parts within the outer cabinet need not be individually enclosed if the assembly conforms with all of the following:

a) Their design and location with respect to openings in the outer cabinet will not result in the emission of flame or molten metal through openings in the cabinet or if it can be shown that failure of the component would not result in a risk of fire.

b) There are no openings in the bottom of the compartment in which the part is located which would permit dropping of molten metal, and the like, onto combustible material.

c) The part is not in proximity to combustible material other than electrical insulation.

Documents
Document Sharing Hub
Full document details: UL 795 2020

d) The part is not located closer than 5 inches to the outer cabinet unless the thickness of sheet metal is in compliance with Table 11.1.

e) The part is not located in an air-handling compartment.

f) The thickness of the outer cabinet is not less than two-gage thicknesses thinner than indicated in Table 11.1 for the maximum dimensions of the cabinet enclosure.

g) The part is not subject to unintentional contact by persons.

11.6 The requirements of 11.5 apply only to parts of high-voltage circuits as defined by 2.38.

11.7 Terminal housings of motors, to which connections are to be made in the field, shall be of metal and shall be sized in accordance with the National Electrical Code, ANSI/NFPA 70.

11.8 Steel enclosures shall be protected against corrosion by painting, plating, or other equivalent means.

11.9 Sheet metal to which a wiring system is to be connected in the field shall have a thickness not less than 0.032 inch (0.813 mm) if uncoated steel, No. 20 MSG, not less than 0.034 inch (0.864 mm) if galvanized steel, No. 20 GSG, and not less than 0.045 inch (1.14 mm) if nonferrous.

11.10 If threads for the connection of conduit are tapped all the way through a hole in an enclosure wall, or if an equivalent construction is employed, there shall be not less than three nor more than five threads in the metal, and the construction of the device shall be such that a conduit bushing can be attached. If threads for the connection of conduit are not tapped all the way through a hole in an enclosure wall, conduit, hub, or the like, there shall be not less than 3-1/2 threads in the metal and there shall be a smooth, rounded inlet hole for the conductors which shall afford protection to the conductors equivalent to that provided by a standard conduit bushing and which shall have an internal diameter approximately the same as that of the corresponding trade size of rigid conduit.

11.11 An enclosure threaded for support by rigid conduit shall provide at least five full threads for engaging with the conduit.

11.12 A knockout in a sheet metal enclosure shall be secured but shall be capable of being removed without undue deformation of the enclosure.

11.13 A knockout shall be provided with a flat surrounding surface for seating of a conduit bushing, and shall be so located that installation of a bushing at any knockout likely to be used during installation will not result in spacings between uninsulated live parts and the bushing of less than those required.

11.14 A plate or plug for an unused conduit opening or other hole in the enclosure shall have a thickness not less than:

a) 0.014 inch (0.356 mm) for steel or 0.019 inch (0.483 mm) for nonferrous metal for a hole having a 1/4 inch (6.4 mm) maximum dimension; and

b) 0.027 inch (0.686 mm) steel or 0.032 inch (0.813 mm) nonferrous metal for a hole having a 1-3/8 inch (34.9 mm) maximum dimension.

A closure for a larger hole shall have a thickness equal to that required for the enclosure of the device or a standard knockout seal shall be used. Such plates or plugs shall be securely mounted.

Documents
Document Sharing Hub

Full document details: UL 795 2020

11.15 The enclosure shall reduce the risk of emission of molten metal, burning insulation, flaming particles, or the like through openings onto combustible material, including the surface on which the equipment is mounted.

11.16 If insulating material other than electrical insulation is provided within the enclosure, consideration is given to the burning characteristics and combustibility of the material, and the proximity of an ignition source.

11.17 All intended mounting positions of the unit are to be considered when determining if it complies with the requirement of 11.15.

11.18 A junction box which is formed in part by another part such as a fan scroll or a motor casing is to fit such that:

a) An opening between the box and motor frame having a dimension exceeding 1/2 inch (12.7 mm) does not permit a flat feeler gauge, 5/64 by 1/2 inch (12.7 mm) wide to enter.

b) An opening between the box and motor frame having no dimension exceeding 1/2 inch does not permit the entrance of a 13/64 inch (5.16 mm) diameter rod.

11.19 The criteria for judging an opening in an electrical enclosure are given in the following items and the related figures:

a) An opening that will not permit entrance of a 3/4 inch (19.1 mm) diameter rod is acceptable if:

1) A probe, as illustrated in Figure 11.1, cannot be made to touch any uninsulated live part when inserted through the opening; and

2) A probe, as illustrated in Figure 11.2, cannot be made to touch enamel insulated wire when inserted through the opening.

b) An opening that will permit entrance of a 3/4 inch (19.1 mm) diameter rod is acceptable under the conditions described in Figure 11.3.

Documents
Document Sharing Hub

Full document details: UL 795 2020

Figure 11.1

Probe for uninsulated live metal parts

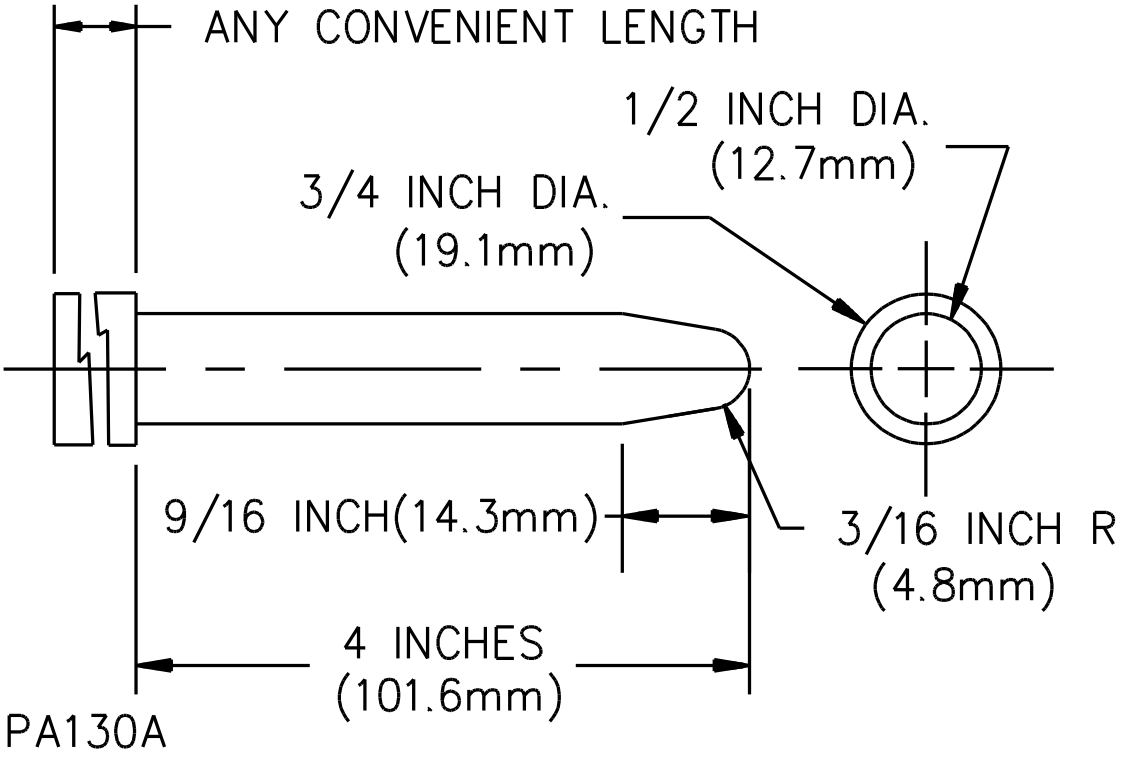

Documents
Document Sharing Hub
Full document details: UL 795 2020

Figure 11.2

Probe for enamel insulated wire

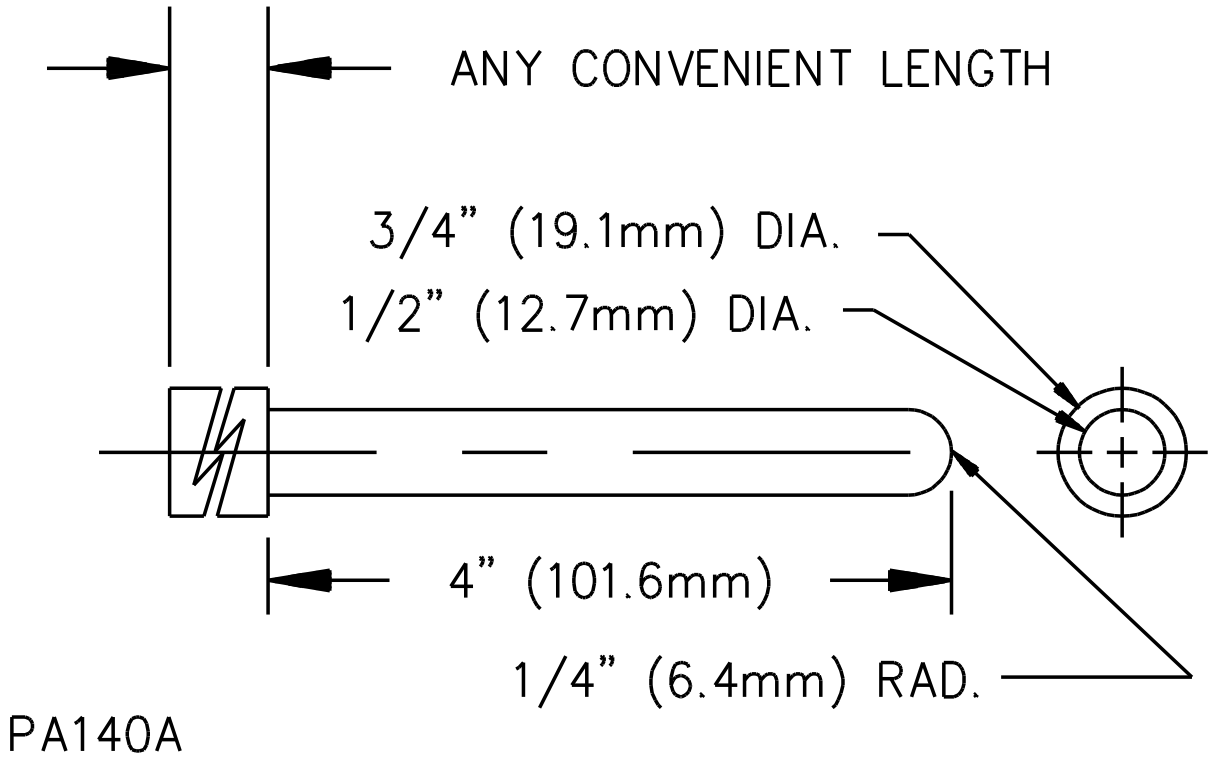

Documents
Document Sharing Hub
Full document details: UL 795 2020

Figure 11.3

Opening in enclosure

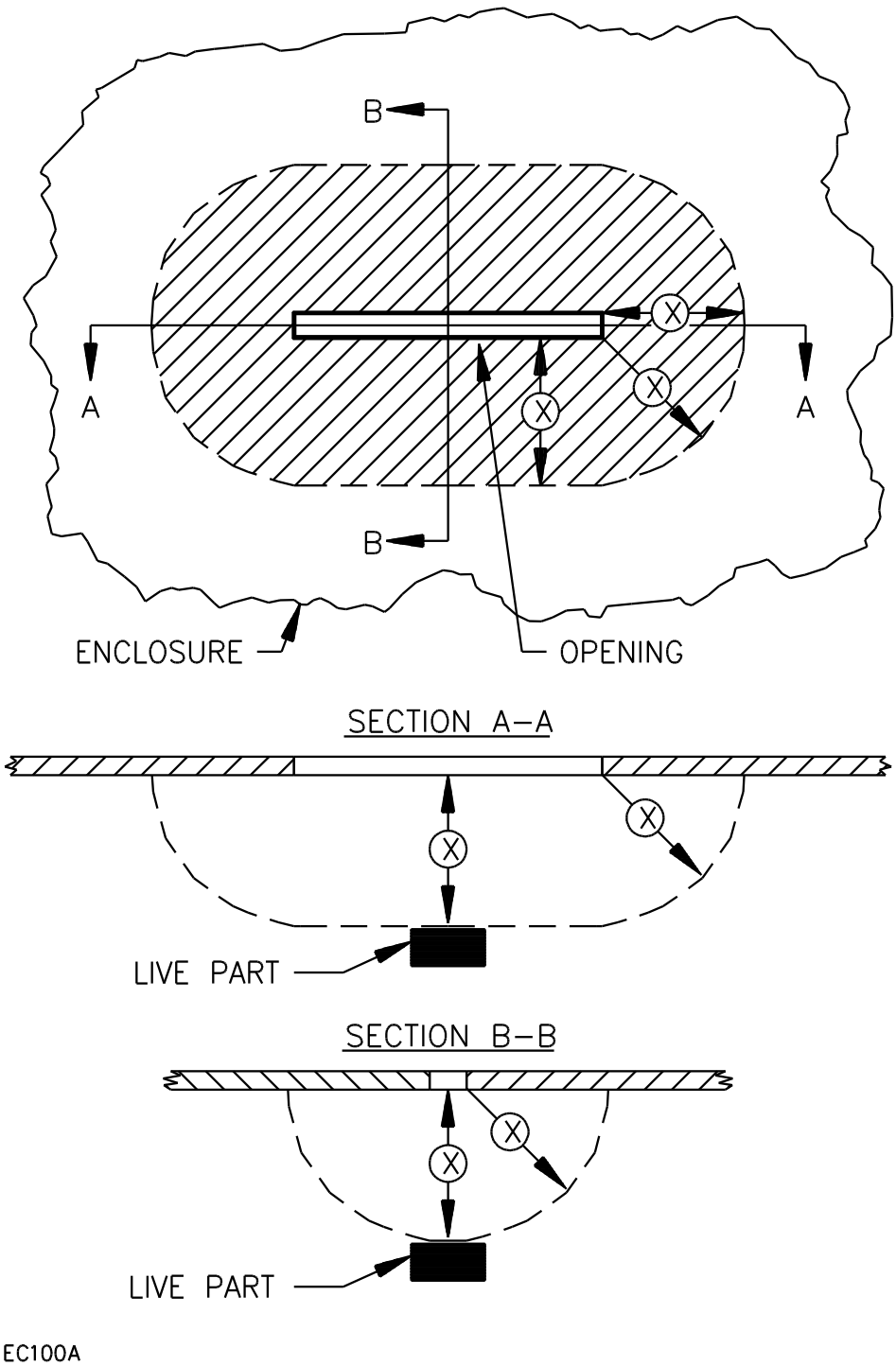

The opening is acceptable if, within the enclosure, there is no uninsulated live metal part or enamel-insulated wire:

a) Less than X inches from the perimeter of the opening, as well as

b) Within the volume generated by projecting the perimeter X inches normal to its plane. X equals five times the diameter of the largest diameter rod which can be inserted through the opening, but not less than four inches.

Documents
Document Sharing Hub
Full document details: UL 795 2020

11.20 During the examination for conformance with the requirements in 11.19, a part of the enclosure, including air filters, which may be removed without the use of tools is to be removed.

11.21 A cover or access panel of an enclosure for uninsulated live parts shall be provided with means for securing it in place.

11.22 A hinged or pivoted panel or cover shall be positioned or arranged so that it is not subject to falling or swinging due to gravity or normal vibration in such a manner as to cause injury to persons by the panel or cover, or by moving parts or uninsulated live parts.

11.23 The assembly shall be so arranged that an overcurrent protective device, such as a fuse, whose normal functioning requires renewal, can be replaced and manual reset devices can be reset without removing parts other than a service cover or panel, and a cover or door enclosing the device.

11.24 A required protective device shall be wholly inaccessible from outside the appliance without opening a door or cover, except that the operating handle of a circuit breaker, the operating button of a manually operable motor protector, the reset button of a manually resettable pressure switch, and similar parts may project outside the appliance enclosure.

11.25 An opening in an enclosure to provide clearance around a dial, knob, lever, or handle shall not allow the entrance of a rod having a diameter of 9/64 inch (3.57 mm) at any setting or position of the dial, knob, etc.

11.26 A fuseholder shall be so designed, installed, or protected that adjacent uninsulated high-voltage live parts within 4 inches (101.6 mm), other than the screw shell of a plug fuseholder, cartridge fuse clips, or wiring terminals to the fuseholder, will not be exposed to contact by persons removing or replacing fuses. An insulating barrier of vulcanized fiber or similar material employed for this purpose shall be not less than 0.028 inch (0.711 mm) in thickness.

11.27 The door or cover of an enclosure shall be hinged if it gives access to fuses or any motor overload protective device, the normal functioning of which requires renewal, or if it is necessary to open the cover in connection with the normal operation of the protective device such as resetting a manual reset overload protective device, except as indicated in 11.28.

11.28 A hinged cover is not required for a device in which the only fuses enclosed are:

a) Control circuit fuses of 2 amperes or less, provided the fuses and control circuit loads (other than a fixed control circuit load, such as pilot lamp) are within the same enclosure;

b) Extractor type fuses each with its own enclosure; or

c) Fuses in low-voltage circuits.

11.29 Hinged covers, where required, shall not depend solely upon screws or other similar means requiring the use of tools to hold them closed, but shall be provided with a catch or spring latch.

11.30 A spring latch, a magnetic latch, a dimple, or any other mechanical arrangement that will hold the door in place and would require some effort on the user's part to open it is considered to be suitable means for holding the door in place as required in 11.29.

11.31 A door or cover giving direct access to fuses in other than low-voltage circuits shall shut closely against a 1/4 inch (6.35 mm) rabbet or the equivalent, or shall have either turned flanges for the full length of four edges or angel strips fastened to it. Flanges or angle strips shall fit closely with the outside of the wall of the box proper and shall overlap the edges of the box not less than 1/2 inch (12.7 mm). A

AVA Documents
Document Sharing Hub
Full document details: UL 795 2020

construction which affords equivalent protection, such as a fuse enclosure within an outer enclosure, or a combination of flange and rabbet, is acceptable.

11.32 Stripes used to provide rabbets, or angle strips fastened to the edges of a door, shall be secured at not less than two points, not more than 1-1/2 inches (38.1 mm) from each end of each strip and at points between these end fastenings not more than 6 inches (152 mm) apart.

11.33 An electron tube or similar glass enclosed device shall be protected against mechanical damage.

12 Field Wiring Connections

12.1 As used in the following a wiring terminal is considered to be a terminal to which power supply or control circuit connections will be made in the field when the unit is installed.

12.2 Provision shall be made for connection of a wiring system that would be suitable for a power supply in accordance with the National Electrical Code, ANSI/NFPA 70.

12.3 The location of an outlet box or compartment in which field wiring connections are to be made shall be such that these connections may be inspected after the equipment is installed as intended.

12.4 The connections are to be accessible without removing parts other than a service cover or panel and the cover of the outlet box or compartment in which the connections are made. A component intended for such use, may serve as a cover. A knockout for connection of a field wiring system to a field wiring compartment shall accommodate conduit of the trade size determined by applying Table 12.1.

Table 12.1
Trade size of conduit in inches

Wire size		Number of wires				
		2	3	4	5	6
AWG	(mm^2)					
14	(2.1)	1/2	1/2	1/2	1/2	1/2
12	(3.3)	1/2	1/2	1/2	3/4	3/4
10	(5.3)	1/2	1/2	1/2	3/4	3/4
8	(8.4)	3/4	3/4	1	1	1-1/4
6	(13.3)	3/4	1	1	1-1/4	1-1/4
4	(21.2)	1	1	1-1/4	1-1/4	1-1/2
3	(26.7)	1	1-1/4	1-1/4	1-1/2	1-1/2
2	(33.6)	1	1-1/4	1-1/4	1-1/2	2
1	(42.4)	1-1/4	1-1/4	1-1/2	2	2
0	(53.5)	1-1/4	1-1/2	2	2	2-1/2
2/0	(67.4)	1-1/2	1-1/2	2	2	2-1/2
3/0	(85.0)	1-1/2	2	2	2-1/2	2-1/2
4/0	(107.2)	2	2	2-1/2	2-1/2	3
MCM						
250	(127)	2	2-1/2	2-1/2	3	3
300	(152)	2	2-1/2	3	3	3-1/2

Table 12.1 Continued on Next Page

AVA Documents
Document Sharing Hub

Full document details: UL 795 2020

Table 12.1 Continued

Wire size		Number of wires				
		2	3	4	5	6
350	(177)	2-1/2	2-1/2	3	3-1/2	3-1/2
400	(203)	2-1/2	3	3	3-1/2	4
500	(253)	3	3	3-1/2	4	4

NOTE – This table is based on the assumption that all conductors will be of the same size and there will be no more than 6 conductors in the conduit. If more than 6 conductors will be involved or if all of them are not of the same size, the internal cross-sectional area of the smallest conduit that may be used is determined by multiplying by 2.5 the total cross-sectional areas of the wires, based on the cross-sectional area of Type THW wire.

12.5 The wiring of the equipment may terminate in a length of flexible metal conduit with an outlet box, control box, or equivalent enclosure intended for connection of the equipment to the wiring system specified in 12.2. If the conduit terminates in an outlet box larger than 4 by 4 by 2 inches (102 by 102 by 51 mm) for splice connection, locknuts on the fittings are not acceptable as a means to reduce the risk of loosening of the conduit fittings. A grounding conductor of the size specified in the National Electrical Code, ANSI/NFPA 70, shall be included unless:

a) The total length of flexible metal conduit of any ground return path in the equipment is not more than 6 feet (1.83 m);

b) No circuit conductor protected by an overcurrent-protective device rated at more than 20 amperes is included; and

c) The conduit is no larger than 3/4-inch (19.1 mm) trade size, or the fittings for the conduit are identified as providing grounding.

12.6 The size of a junction box in which field installed conductors are to be connected by splicing shall be not less than that indicated in Table 11.2. A conductor passing through the box is counted as one conductor, and each conductor terminating in the box is also counted as one conductor. A field furnished conductor for high-voltage circuits is considered to be not smaller than 14 AWG.

Table 12.2
Size of junction boxes

Size of conductor, AWG	Free space within box for each conductor, cubic inches
16 or smaller	1.5
14	2.0
12	2.25
10	2.5
8	3.0

12.7 The limitations in 12.6 do not apply to terminal housings supplied with motors, nor to boxes or enclosures which contain terminals for electrical connections.

12.8 Wiring terminals or leads not less than 6 inches (152 mm) long for connection of field wiring conductors of at least the size required by the National Electrical Code, ANSI/NFPA 70, corresponding to the marked rating of the assembly shall be provided.

12.9 Leads may be less than 6 inches (152 mm) in length if it is evident that the use of a longer lead might result in a risk of electric shock.

Documents
Document Sharing Hub
Full document details: UL 795 2020

12.10 Leads intended for connection to an external circuit shall be provided with strain relief if stress on the lead may be transmitted to terminals, splices, or internal wiring which may cause the lead to separate from its terminal or result in damage to the lead from sharp edges. Leads shall be tested in accordance with the Strain Relief Test in Section 58.

12.11 An identified, grounded, terminal or lead shall not be electrically connected to a single-pole manual switching device which has an off position or to a single-pole overcurrent, not inherent overheating, protective device.

12.12 At terminals, stranded conductors shall be restrained from contacting other uninsulated live parts and from contacting dead metal parts. This may be accomplished by use of pressure terminal connectors, soldering lugs, crimped eyelets, soldering all strands of the wire together, or equivalent means. Open slot-type connectors shall not be used unless they are designed to prevent disconnection resulting from loosening of the clamping means. The shanks of terminal connectors shall be protected by insulating tubing, or the equivalent, if the required spacings may be reduced as a result of loosening of the clamping means, the thickness of the insulation on the shanks shall be not less than 0.028 inch (0.711 mm).

12.13 Leads provided for spliced connections to an external high-voltage circuit shall not be connected to wire binding screws or pressure terminal connectors located in the same compartment as the splice or visible to the installer, unless the screws or connectors are rendered unusable for field wiring connections or the leads are insulated at the unconnected ends.

12.14 Terminal parts by which field-wiring connections are made shall consist of soldering lugs or pressure terminal connectors secured in place in accordance with the requirements in 12.19, except that for 10 AWG (5.3 mm^2) and smaller wires, the parts to which wiring connections are made may consist of clamps or wire binding screws with cupped washers, terminal plates having upturned lugs, or the equivalent, to hold the wire in position.

12.15 A wire binding screw at a high-voltage wiring terminal for field connection shall be not smaller than No. 10 (4.8 mm major diameter).

Exception No. 1: A No. 8 (4.2 mm major diameter) screw may be used for the connection of a conductor not larger than 14 AWG (2.1 mm^2).

Exception No. 2: A No. 6 (3.5 mm major diameter) screw may be used for the connection of a 16 or 18 AWG (1.3 or 0.82 mm^2) control-circuit conductor.

12.16 A terminal plate for a wire binding screw shall be of metal not less than 0.030 inch (0.762 mm) in thickness for a 14 AWG or smaller wire, and not less than 0.050 inch (1.27 mm) in thickness for a wire larger than 14 AWG; and in either case there shall be not less than two full threads in the metal.

12.17 A terminal plate formed from stock having the minimum required thickness may have the metal extruded at the tapped hole for the binding screw so as to provide two full threads.

12.18 A wire binding screw shall thread only into metal.

12.19 Field wiring terminals shall be secured to their supporting surfaces by methods other than friction between surfaces so that they will be restrained from turning or shifting in position if such motion may result in reduction of spacings to less than those required. This may be accomplished by two screws or rivets; by square shoulders or mortices; by a dowel pin, lug, or offset; by a connecting strap or clip fitted into an adjacent part; or by some other equivalent method.

12.20 Conductors intended for connection to a grounded neutral line shall be identified, i.e., finished in a continuous white or gray covering, three continuous white stripes on other than green insulation, or a

Documents
Document Sharing Hub
Full document details: UL 795 2020

marking of white or gray color at the termination. All other current carrying conductors shall be finished in colors other than white, gray, or green. A terminal for connection of a grounded conductor shall be identified by a metallic plated coating, substantially white in color, and shall be readily distinguishable from other terminals, or it shall be identified in some other manner, such as on an attached wiring diagram.

12.21 A box or enclosure included as part of the assembly and in which a branch circuit supplying power to the furnace is to be connected, shall not require that it be moved for normal care of the unit. This requirement does not apply to separate limit controls and stack switches, where permitted, to which metal-clad cable or flexible metallic conduit is to be directly attached.

13 Internal Wiring

13.1 The wiring of high-voltage and safety control circuits shall conform to the requirements in this Section.

13.2 Wiring shall be accomplished with insulated conductors having current carrying capacity, voltage, and temperature ratings consistent with their use. A conductor, other than an integral part of a component, shall be not smaller than 18 AWG (0.82 mm^2).

13.3 If insulated conductors rated for use at temperatures in excess of 140°F (60°C) are required, such wiring shall be furnished by the manufacturer as part of the assembly and the devices to be connected by such wiring shall be factory located on the equipment.

13.4 Electrical wiring to a part which must be moved for normal maintenance and servicing shall be arranged so that the part may be moved without breaking soldered connections or disconnecting conduit. Conductors to be disconnected from terminals of such part shall terminate in eyelets or connectors. If the wiring to a part which functions also as an access plate or cover, i.e., a transformer closing the access to the nozzle assembly, is not readily detachable, the assembly shall include provision for support of that part by means other than the wiring when the part is moved for servicing. Any allowable movement of such part shall not unduly twist, bend, or pull the wiring.

13.5 Except as permitted by 13.17 and 13.18 conductors shall be:

a) Enclosed within conduit that complies with the Standard for Flexible Metal Conduit, UL 1 or the Standard for Electrical Rigid Metal Conduit – Steel, UL 6, as applicable, electrical metallic tubing that complies with the Standard for Electrical Metallic Tubing – Steel, UL 797 or the Standard for Extruded Insulating Tubing, UL 224, metal raceway electrical enclosure;

b) Within a metal-clad cable that complies with the Standard for Metal Clad Cable, UL 1569; or

c) Exposed Run Tray Cable, Type TC-ER, that complies with the requirements for Power and Control Tray Cable, UL 1277 or, for applications not exceeding 150 volts and/or 5 amps, Exposed Run Instrumentation Tray Cable, Type ITC-ER, that complies with the requirements of the Standard for Instrumentation Tray Cable, UL 2250. The cable utilized shall:

1) Comply with the crush and impact requirements of the Standard for Metal Clad Cable, UL 1569;

2) Be secured and supported at intervals not exceeding 6 feet (1.8 m).

3) Have voltage and temperature ratings suitable for the intended application.

13.6 Group A of Table 13.1 includes some wiring materials suitable for use if enclosed as indicated in the preceding paragraph.

AVA Documents
Document Sharing Hub

Full document details: UL 795 2020

Table 13.1
Typical wiring materials

Group	Type of wire, cord, cable, or wiring material	Wire size		Insulation thickness	
		AWG	(mm^2)	Inch	(mm)
A	FFH-2, MTW, PF, PFF, PGF, PGFF, RFH-2, RFHH-2, RFHH-3, RH, RHH, RHW, SF-2, SFF-2, T, TF, TFF, TFN, TFFN, THW, THW-MTW, THWN, TW, XHHW, or thermoplastic appliance wiring material.	10 and smaller	(5.3)	2/64	(0.8)
		8	(8.4)	3/64	(1.2)
		6	(13.3)	4/64	(1.6)
		4	(21.2)	4/64	(1.6)
		3	(26.7)	4/64	(1.6)
		2	(33.6)	4/64	(1.6)
		1	(42.4)	5/64	(2.0)
		1/0	(53.5)	5/64	(2.0)
		2/0	(67.4)	5/64	(2.0)
		3/0	(85.0)	5/64	(2.0)
		4/0	(107.2)	5/64	(2.0)
B	S, SE, SJ, SJO, SJOO, SJT, SJTO, SJTOO, SO, SOO, ST, STO, STOO, or appliance wiring material with thermoplastic or neoprene insulation	18	(0.82)	4/64	(1.6)
		16	(1.3)	4/64	(1.6)
		14	(2.1)	5/64	(2.0)
		12	(3.3)	5/64	(2.0)
		10	(5.3)	5/64	(2.0)
		8	(8.4)	6/64	(2.4)
		6	(13.3)	8/64	(3.2)
Thermoplastic wiring materials, as referenced in Group A, with insulation thickness of 2/64 inch (0.8 mm) for 16 or 18 AWG (1.3 or 0.82 mm^2) and 3/64 inch (1.2 mm) for 14, 12, 10, or 8 AWG (2.1, 3.3, 5.3, or 8.4 mm^2), are considered equivalent to the wiring material referenced in Group B, when the conductors are covered with 1/32 inch (0.8 mm) wall thickness thermoplastic insulating tubing of a type suitable for the purpose from the standpoint of dielectric properties, heat resistance, moisture-resistance, and flammability.					

13.7 Flexible metal conduit, if used, shall be not smaller than 3/8 inch electrical trade size. This does not apply to parts of components, such as conduit protecting flame sensor leads, considered under other Standards.

13.8 If flexible metal conduit is used, it shall be mechanically secured at intervals not exceeding 4-1/2 feet (1.37 m) and within 12 inches (30.5 cm) on each side of every junction box except for lengths not over 36 inches (91 cm) where flexibility is necessary.

13.9 All splices and connections shall be mechanically secure and bonded electrically. A soldered connection shall be made mechanically secure before being soldered if bushing or loosening of the connection may result in any hazardous condition.

13.10 A splice shall be provided with insulation equivalent to that required for the wires involved if permanence of spacing between the splice and other metal parts is not ensured.

13.11 Splicing devices, such as fixture type splicing connectors, pressure wire connectors, and the like, may be employed if they have insulation suitable for the voltage to which they are subjected. In determining if splice insulation consisting of coated fabric, thermoplastic, or other type of tubing is acceptable, consideration is to be given to such factors as its dielectric properties, heat resistant and moisture resistant characteristics, and the like. Thermoplastic tape wrapped over a sharp edge does not meet the intent of the requirement.

AVA Documents
Document Sharing Hub
Full document details: UL 795 2020

13.12 A splice is to be enclosed by being installed in a junction box, control box, or other compartment in which high-voltage wiring materials, may be employed.

13.13 Splices shall be located, enclosed, and supported so that they are not subject to mechanical damage, flexing, motion, or vibration.

13.14 At all points where conduit or metal-clad cable terminates the conductors shall be protected from abrasion. If metal-clad cable is used, an insulating bushing or its equivalent shall be provided between the conductors and the cable and the connector or clamp shall be of such design that the insulating bushing or its equivalent will be visible for inspection.

13.15 The design of a wireway shall be such that the interconnection of sections and fittings will provide a rigid mechanical assembly and electrical conductivity. The interior of the wireway shall be free from burrs and sharp corners or edges which might cause damage to the insulation on wires.

13.16 All wiring shall be supported and routed to reduce the risk of damage due to sharp edges or moving parts.

13.17 Internal wiring involving a potential of not more than 300 volts between parts attached to the same assembly with a predetermined fixed relationship one to the other may be done with Type SO or ST cord, provided all of the following conditions are fulfilled:

a) It is not practical to do the wiring in accordance with 13.5.

b) The cord is not required to be bent, twisted, or otherwise displaced to render normal maintenance and service.

c) The length of cord exterior to the assembly is not more than 4 inches and strain relief is provided.

13.18 Cords or wiring material as referenced in Group B, Table 13.1 may be employed if the wiring is enclosed by a furnace casing conforming to all of the following:

a) There are no openings in the bottom, unless a U-shaped channel or trough is located under the wiring and the wires do not project through the plane of the top of the trough or channel.

b) If the device is for installation only on noncombustible flooring, the bottom of such compartment may be open provided all sides of the compartment extend to the floor level.

c) Louvers or openings in other than the bottom will not permit entrance of a rod having a diameter of 1/2 inch (12.7 mm), and openings for such items as pipe or conduit are not more than 1/2 inch (12.7 mm) in diameter larger than the object that will be installed through the opening.

d) Openings are not closer than 6 inches to the wiring unless metallic barriers or baffles are placed between the wiring and the openings.

e) Where combustible material other than electrical insulation is located within the compartment the wiring is separated from such material and the material has self-extinguishing characteristics. An air filter may be employed within the enclosure.

13.19 With reference to 13.18(e), plastic materials shall be classified as Type V-0, V-1, V-2, 5V, HF-1, or HF-2 in accordance with requirements in the Standard for Tests for Flammability of Plastic Materials for Parts in Devices and Appliances, UL 94, and other nonmetallic materials shall have equivalent characteristics.

13.20 In applying the requirement of 13.18, an opening which is always intended to be connected to an air duct may be considered as closed.

AVA Documents
Document Sharing Hub

Full document details: UL 795 2020

13.21 Holes in walls or partitions through which insulated wires or cords pass and on which they may bear shall be provided with smoothly rounded bushings or shall have smooth, rounded surfaces upon which the wires or cords may bear, to prevent abrasion of the insulation. Bushings, if required, shall be ceramic, phenolic, cold-molded composition, fiber, or equivalent material.

13.22 A fiber bushing shall be not less than 3/64 inch (1.2 mm) in thickness, shall be so located that it will not be exposed to moisture, and shall not be employed where it will be subjected to a temperature higher than 194°F (90°C) under normal operating conditions.

13.23 To provide an unbushed opening in sheet metal usually requires rolling and/or extrusion of the metal around the opening, or the insertion of a grommet conforming to 13.21.

13.24 Except as indicated in the following paragraph, conductors of motor circuits having two or more motors, one or more of which are thermal or overcurrent protected, wired for connection to one supply line shall withstand the conditions of a short circuit test without creating a risk of fire or electric shock. See Short-Circuit Test.

13.25 Conductors that conform to the following are considered to meet the intent of the requirements without test:

a) Conductors that have not less than one-third the ampacity of the required branch-circuit conductors;

b) Conductors that are 18 AWG (0.82 mm^2) or larger and not more than 4 feet (1.2 m) in length provided that the circuit will be protected by a fuse or HACR Type circuit breaker rated 60 amperes or less as specified on the product nameplate or provided as part of the product and acceptable for branch-circuit protection. This applies to any of the wiring materials specified in this standard, including those enclosed in raceways; or

c) Conductors that serve as jumper leads between controls providing the length of the leads does not exceed 3 inches (76 mm) or the conductors are located in a control panel.

14 Separation of Circuits

14.1 Unless provided with insulation rated for the highest voltage involved, insulated conductors of different internal wiring circuits shall be separated by barriers or shall be segregated; and shall, in any case, be so separated or segregated from uninsulated live parts connected to different circuits or opposite polarity parts of the same circuit.

14.2 Segregation of insulated conductors as required above may be accomplished by clamping, routing, or equivalent means which promotes permanent separation from insulated or uninsulated live parts of a different circuit.

14.3 Field-installed conductors of any circuit shall be segregated or separated by barriers from:

a) Field-installed and factory-installed conductors connected to any other circuit, unless the conductors of both circuits are insulated for the maximum voltage of either circuit.

b) Uninsulated live parts of any other circuit.

c) Any uninsulated live parts whose short-circuiting may result in operation of the product in a manner that involves a risk of fire, electric shock, or injury to persons, except that a construction in which field-installed conductors may make contact with wiring terminals is acceptable, provided that Type T or equivalent conductors are or will be installed when wired in accordance with the National Electrical Code, ANSI/NFPA 70.

AVA Documents
Document Sharing Hub
Full document details: UL 795 2020