UL 796

STANDARD FOR SAFETY

Printed Wiring Boards

Documents
Document Sharing Hub

Full document details: UL 796 2023

Documents
Document Sharing Hub

Full document details: UL 796 2023

UL Standard for Safety for Printed Wiring Boards, UL 796

Twelfth Edition, Dated October 13, 2020

SUMMARY OF TOPICS:

This revision of ANSI/UL 796 dated October 4, 2023 includes the following changes in requirements:

- ***Addition of constructions not currently covered; 1.5, 1.6***
- ***Clarification of requirements; 1.2, 2.68, 2.92, 17.6.2, Table 20.1***
- ***Modify reference to IPC test pattern artwork in Figure 10.1.***
- ***Additional Considerations for flame only multi-layer PWBs ; 16.2.1***
- ***Clarification of missing requirements for hybrid PWBs; 18.4A***
- ***Clarification of ceramic PWB requirements; 20.1.2***

Text that has been changed in any manner or impacted by ULSE's electronic publishing system is marked with a vertical line in the margin.

The new and revised requirements are substantially in accordance with Proposal(s) on this subject dated June 30, 2023.

All rights reserved. No part of this publication may be reproduced, stored in a retrieval system, or transmitted in any form by any means, electronic, mechanical photocopying, recording, or otherwise without prior permission of ULSE Inc. (ULSE).

ULSE provides this Standard "as is" without warranty of any kind, either expressed or implied, including but not limited to, the implied warranties of merchantability or fitness for any purpose.

In no event will ULSE be liable for any special, incidental, consequential, indirect or similar damages, including loss of profits, lost savings, loss of data, or any other damages arising out of the use of or the inability to use this Standard, even if ULSE or an authorized ULSE representative has been advised of the possibility of such damage. In no event shall ULSE's liability for any damage ever exceed the price paid for this Standard, regardless of the form of the claim.

Users of the electronic versions of UL's Standards for Safety agree to defend, indemnify, and hold ULSE harmless from and against any loss, expense, liability, damage, claim, or judgment (including reasonable attorney's fees) resulting from any error or deviation introduced while purchaser is storing an electronic Standard on the purchaser's computer system.

Documents
Document Sharing Hub

Full document details: UL 796 2023

No Text on This Page

Documents
Document Sharing Hub

Full document details: UL 796 2023

OCTOBER 13, 2020
(Title Page Reprinted: October 4, 2023)

ANSI/UL 796-2023

UL 796

Standard for Printed Wiring Boards

Fifth Edition – May, 1980
Sixth Edition – November, 1984
Seventh Edition – November, 1993
Eighth Edition – October, 1999
Ninth Edition – April, 2006
Tenth Edition – October, 2010
Eleventh Edition – May, 2016

Twelfth Edition

October 13, 2020

This ANSI/UL Standard for Safety consists of the Twelfth Edition including revisions through October 4, 2023.

The most recent designation of ANSI/UL 796 as an American National Standard (ANSI) occurred on October 4, 2023. ANSI approval for a standard does not include the Cover Page, Transmittal Pages, and Title Page. Any other portions of this ANSI/UL standard that were not processed in accordance with ANSI/UL requirements are noted at the beginning of the impacted sections.

The Department of Defense (DoD) has adopted UL 796 on January 20, 1995. The publication of revised pages or a new edition of this Standard will not invalidate the DoD adoption.

Comments or proposals for revisions on any part of the Standard may be submitted to ULSE at any time. Proposals should be submitted via a Proposal Request in the Collaborative Standards Development System (CSDS) at https://csds.ul.com.

Our Standards for Safety are copyrighted by ULSE Inc. Neither a printed nor electronic copy of a Standard should be altered in any way. All of our Standards and all copyrights, ownerships, and rights regarding those Standards shall remain the sole and exclusive property of ULSE Inc.

COPYRIGHT © 2023 ULSE INC.

Documents
Document Sharing Hub

Full document details: UL 796 2023

No Text on This Page

Documents
Document Sharing Hub

Full document details: UL 796 2023

CONTENTS

INTRODUCTION

1 Scope 7
2 Glossary 7
3 Units of Measurement 16
4 Measurement Accuracy and Testing Conditions 16
5 Supplementary Test Procedures 17
6 Referenced Publications 17
7 General 17

CONSTRUCTION

8 General 18
9 Base Materials 18
9.1 General 18
9.2 Metal-clad base material 20
9.3 Direct support 20
10 Conductors 21
10.1 Materials 21
10.2 Silver 21
10.3 Conductive coating 22
10.4 Edges and width 22
10.5 Pattern surfaces 22
10.6 External copper foil or cladding process weight 22
10.7 Midboard conductor 23
10.8 Edge conductor 25
10.9 Maximum unpierced conductor area (Maximum area diameter) 25
10.10 Contact surface plating 26
10.11 Plated-through holes and via holes 26
10.12 Additional conductive plating 27
10.13 Assembly soldering process – solder limits 27
10.14 Pattern 28
10.15 Conductive coin 28
11 Adhesives for Conductor Bonding 28
12 Processes 29
12.1 General 29
12.2 Multiple-site processing 30
13 Permanent Coatings 30
13.1 General 30
13.2 Permanent coatings program 32
14 Plugged-Hole Materials 32
15 Embedded Components 35
16 Singlelayer (Singlesided and Doublesided) Printed Wiring Boards 35
16.1 General 35
16.2 Metal-clad (MCIL/CCIL) base material program 36
17 Multilayer Printed Wiring Boards 37
17.1 General 37
17.2 Assembly 37
17.3 Mass laminate printed wiring boards 37
17.4 Electrical insulation 38
17.5 Laminations 38
17.6 Dissimilar dielectric materials evaluation 39
17.7 Interlayer connections 39

AVA Documents
Document Sharing Hub
Full document details: UL 796 2023

17.8 Metal-clad laminate and prepreg materials....39
18 Hybrid Multilayer Printed Wiring Boards....40
19 High Density Interconnect (HDI) Printed Wiring Boards Made With Unreinforced Materials....40
20 Metal Base Printed Wiring Boards....41
20.1 General....41
20.2 Vertical flammability evaluation for metal base PWBs....43
20.3 Bond strength evaluation for metal base PWBs....45
21 Flexible Printed Wiring Boards....45
22 Variations in Printed Wiring Board Construction....45

PERFORMANCE

23 Test Samples....50
24 Data Collection....53
25 Microsection Analysis....55
25.1 General....55
25.2 Test samples....55
25.3 Micro-etching the sample surface....56
25.4 Material and test pattern parameter examination....56
26 Thermal Stress Test....57
26.1 Purpose....57
26.2 Apparatus....57
26.3 Procedure....57
26.4 Retests....58
27 Flammability....58
27.1 General....58
27.2 Samples....59
27.3 Conditioning....59
28 Bond Strength....59
28.1 After thermal stress....59
28.2 As received....59
28.3 10 day and 56 day oven conditioning programs....60
29 Delamination and Blistering....62
30 Thermal Cycling Test....62
31 Dissimilar Dielectric Material Delamination Test....63
32 Plating Adhesion....63
33 Conductive Paste Adhesion Test....64
34 HDI PWB Test Methods....64
34.1 General....64
34.2 HDI Vertical flammability evaluation....64
34.3 HDI Bond strength, delamination and blistering evaluation....66
35 Silver Migration Test....67
35.1 General....67
35.2 Procedure....69
35.3 Results....69

MARKINGS

36 General....70

SUPPLEMENT SA – FOLLOW-UP INSPECTION

SA1 Scope....73
SA2 Glossary....73
SA3 Responsibility of the Manufacturer....74

AVA Documents
Document Sharing Hub
Full document details: UL 796 2023

SA4 Responsibility of the Field Representative 74
SA5 Selection of Samples for Follow-Up Testing 75
SA6 Follow-Up Test Program 75

ANNEX A (Informative) – CONSTRUCTION CONFIGURATIONS

Documents
Document Sharing Hub

Full document details: UL 796 2023

No Text on This Page

Documents
Document Sharing Hub

Full document details: UL 796 2023

INTRODUCTION

1 Scope

1.1 These requirements apply to rigid printed wiring boards and flexible printed wiring board for use as components in devices or appliances. Compliance with these requirements does not indicate that the product is acceptable for use as a component of an end product without further investigation.

1.2 The flexible printed wiring boards covered by these requirements consist of conductors affixed to insulating base film, with or without a cover material, with midboard connections.

1.3 These requirements do not cover flexible printed wiring boards of laminated-film construction in which the conductors are parallel to each other and are completely covered by the base film with only point-to-point end connections.

1.4 Flexible material constructions and multilayer rigid flex composite interconnect constructions with and without stiffener and adhesive materials shall be investigated in accordance with the Standard for Flexible Materials Interconnect Constructions, UL 796F.

1.5 The evaluation of printed wiring boards that are produced using additive manufacturing (AM) processes, commonly referred to as 3D printing, are to be evaluated under the appropriate clauses of this Standard based on the board application.

1.6 For constructions and materials not specifically addressed in this Standard:

- The printed wiring board should provide safeguards not less than that generally afforded by this document and the principles of safety contained herein. This includes printed wiring boards with technologies, materials, or methods of construction, including the manufacturing process, not specifically addressed in this document.

- Propose for discussion with the Technical Committee the need for additional detailed requirements to address a new situation in a timely manner.

2 Glossary

2.1 For the purpose of this Standard the following definitions apply.

2.2 ADDITIVE PROCESS – A selective or non-selective process used to deposit a pattern of conductor material(s) on clad or unclad base material.

2.3 ADHESIVE – A substance such as glue or cement used to join, bond, or fasten materials or objects together.

2.4 AS RECEIVED – Samples in an unconditioned state, prior to being subject to conditioning, or without a history of conditioning.

2.5 BASE MATERIAL – An organic or inorganic material used to support a pattern of conductor material. The base material may be rigid or flexible.

2.6 BASE MATERIAL THICKNESS – The thickness of the base dielectric material excluding conductive foil or material deposited on the surface of the base material. If an adhesive is used to adhere the conductor material to the base material, the adhesive thickness and application surfaces (base material sides) is indicated separately.

AVA Documents
Document Sharing Hub
Full document details: UL 796 2023

2.7 BLIND VIA – A via extending to only one surface of the board construction.

2.8 BLISTERING – Localized area of delamination. See 2.45, Delamination.

2.9 BONDING LAYER – An adhesive layer used to bond discrete layers of multilayer board constructions. Also known as Prepreg.

2.10 BUILD-UP THICKNESS – Overall thickness of a combination of materials. Unless otherwise indicated, the build-up thickness will refer to the overall thickness of a board construction where no internal or external conductor material resides.

2.11 BUILT-UP MULTILAYER (BUM) – Multiple layers of HDI materials.

2.12 BURIED VIA – A via that does not extend to the surface of the board construction.

2.13 CAP LAYER – A single sided copper clad laminate bonded to the external surface of the multilayer board with bonding layer material [prepreg (b-stage)].

2.14 CIRCUIT – Electrical devices and elements interconnected to perform a desired electrical function.

2.15 CIRCUITRY LAYER – Conductor layer or plane in or on a printed wiring board.

2.16 CLADDING – A deposited or plated metallic layer or laminated foil used for its protective and/or electrical properties. See Conductive Foil.

2.17 CLAD MATERIAL – See Metal Clad Base Material.

2.18 COATING – A nonmetallic substance applied by some process, such as dipping, screening, spraying, or melt-flow.

2.19 COMPONENT – An individual part or combination of parts intended to perform a desired function.

2.20 CONDITIONING – Exposure of test samples to an environment for a period of time, prior to or after testing and prior to evaluation.

2.21 CONDUCTIVE (ELECTRICAL) – The ability of a substance or material to conduct electricity.

2.22 CONDUCTIVE COIN – A piece of metal on the surface or in the printed wiring board construction that allows the flow of thermal energy. See Heatsink.

2.23 CONDUCTIVE FOIL – A thin metal sheet intended for forming a conductor pattern on a base material.

2.24 CONDUCTIVE PASTE – An organic or inorganic paste substance capable of transmitting electricity, used for circuit conductors, including but not limited to carbon, copper, and silver.

2.25 CONDUCTOR – A trace or path for electricity to transmit in a conductor pattern.

2.26 CONDUCTOR ADHESIVE – Adhesive material used to attach conductor material to a base material.

2.27 CONDUCTOR AVERAGE TRACE WIDTH – The average width of a length of conductor trace.

AVA Documents
Document Sharing Hub
Full document details: UL 796 2023

2.28 CONDUCTOR BASE WIDTH – The width of a conductor at the interface of the base material as determined by microsection analysis. This width is used to determine bond strength/peel strength values.

2.29 CONDUCTOR LAYER – A single plane of a conductor material or pattern on a base material.

2.30 CONDUCTOR MATERIAL – An organic or inorganic substance capable of transmitting electricity, used for circuit conductors, including but not limited to copper, tin, nickel, gold, carbon paste, copper paste, silver paste, ruthenium oxide paste, etc.

2.31 CONDUCTOR PATTERN – The path, design, or configuration of conductor material on the base material, including but not limited to conductor traces, lands, through-holes, and vias.

2.32 CONDUCTOR SPACING – The minimum distance between adjacent conductors.

2.33 CONDUCTOR THICKNESS – The thickness of the conductor and additional metallic platings or coatings, excluding non-conductive coatings.

2.34 CONDUCTOR TRACE – A linear conductor path of a conductor circuit.

2.35 CONDUCTOR WIDTH – The width of the conductor as viewed from a top view or at the plane of the surface of a base material, whichever is less. See Conductor Base Width.

2.36 CONFORMAL COATING – A protective covering applied on a printed wiring board capable of conforming to the configuration of objects coated, used to increase the dielectric voltage-withstand capability between conductors, and/or to protect against environmental conditions.

2.37 CONSTRUCTION – A variation in laminate materials, including but not limited to base material, laminate, prepreg, dielectric materials, or other insulation materials. Variations include singlelayer, multilayer, and composite constructions.

2.38 CONTACT FINGER – A conductive surface usually located at an edge of a printed wiring board used to provide electrical connection by pressure contact.

2.39 CONTINUITY – An uninterrupted path for the flow of electrical current in a circuit.

2.40 CORE MATERIAL – The innermost material of printed wiring board which may be used to support a subsequent layer or layers of dielectric material and conductor pattern. Core material may be an organic or inorganic material, with or without integral dielectric material. Core material may be referred to as substrate material.

2.41 COUPON – A test vehicle constructed to represent a production printed wiring board to be used for testing. See Sample.

2.42 CRITICAL OPERATION – Production process or fabrication step considered potentially detrimental to the materials subject to the operation.

2.43 CURRENT – The movement or flow of electrons in a conductor due to a voltage potential difference to the materials subject to the operation.

2.44 DECLAD – A dielectric material from which the foil or conductive material has been removed by etching or other means.

Documents
Document Sharing Hub
Full document details: UL 796 2023

2.45 DELAMINATION – A planar separation of materials (i.e. separation between conductor and base material, prepreg, dielectric material, etc.).

2.46 DESICCATOR – A desiccator containing anhydrous calcium chloride, or other drying agent, maintained at a relative humidity not exceeding 20 percent at 23 ±2°C (73.4 ±3.6°F).

2.47 DIELECTRIC – A material capable of high resistance to the flow of electrical current and capable of being polarized by an electric field.

2.48 DOUBLESIDED – A singlelayer board construction with conductor pattern on the two external sides of the base material only. Sometimes referred to as di-clad.

2.49 EDGE CONDUCTOR – A conductor parallel with and spaced not more than 0.40 mm (0.015 inch) from the edge of a printed wiring board.

2.50 ELECTRODEPOSITION – The depositing of conductor material from a plating solution by the application of electrical current.

2.51 ELECTROLESS DEPOSITION – The depositing of conductor material from an autocatalytic plating solution without the application of electrical current.

2.52 ELECTROPLATING – See "Electrodeposition", 2.50.

2.53 EMBEDDED COMPONENT – A discrete component integrated into the board construction during fabrication.

2.54 END PRODUCT – An individual part or assembly in its final completed state. See End-Use Product.

2.55 END-USE PRODUCT – A device or appliance in which a printed wiring board is installed as a component.

2.56 ETCHANT – A chemically reactive solution used to remove portions or all material from a base material construction.

2.57 ETCHED – A laminate material in which the conductive layer has been removed by a chemical process.

2.58 ETCHING – The action of chemical, or chemical and electrolytic, removal of conductive or resistive material.

2.59 EUTECTIC – An isothermal reversible reaction in which on cooling a liquid solution is converted into two or more intimately mixed solids, with the number of solids formed being the same as the number of components in the system.

2.60 EUTECTIC SOLDER – The alloy composition at which a solder alloy melts/freezes completely without going through a partially solid (pasty) phase.

2.61 EXTERNAL LAYER – The conductor pattern on the external surface of the board construction.

2.62 FABRICATOR – The manufacturer who forms the pattern of conductive material on the base.

Documents
Document Sharing Hub
Full document details: UL 796 2023

2.63 FAMILY – Multiple grades of materials that have identical IR spectra and performance characteristics and are UL Recognized for the manufacturer as a material family (alternate grades separated by a comma) of which one grade is representative of others in the family.

2.64 FILM – A thin coating or membrane material, usually 0.25 mm (0.010 inches) or less in thickness.

2.65 FLAMMABILITY RATED ONLY – A printed wiring board intended for use where the construction shall be evaluated for a flammability classification only, and the thermal, mechanical, and electrical capacity of the board is not of concern and only the flammability classification of the resulting printed wiring board is of concern in the end-use product.

2.66 FLAT (PANEL) – Any number of boards assembled together in a sheet, usually with a frame around the side, when shipped from the board factory.

2.67 FLEXIBLE CONSTRUCTION – A sub-category board construction intended for use where some portion of the board construction shall be subject to flexing in the end-use product application. See Standard for Flexible Materials Interconnect Constructions, UL 796F.

2.68 FLEXIBLE PRINTED CIRCUIT BOARD – Printed board produced from flexible base material with or without flexible cover material and/or electrically nonfunctional stiffeners.

2.69 FLUSH-PRESS METAL CONDUCTOR – A metal conductor, such as copper, positioned and secured in a base material by a heat and pressure process.

2.70 FLUX – A surface oxidation removing and protecting compound, used to promote wetting of the base metal surface during soldering operations. Flux shall include, but not be limited to acid flux, inorganic flux, organic flux, and water soluble organic flux.

2.71 FOIL LAMINATION – A fabrication process for multilayer category board constructions, where the board construction and conductor foil are bonded to the external surface during one operation.

2.72 GRADE – A designation arbitrarily assigned to a base material by the base-material manufacturer.

2.73 GROUND – A common reference point for conductor circuits.

2.74 GROUND PLANE – A conductor plane used as a common reference point for conductor circuits.

2.75 HAND SOLDERING – Hand-held operator controlled soldering, usually with a soldering iron.

2.76 HEATSINK – A device made of high thermal conductivity and low specific heat material capable of dissipating heat generated by a component or assembly.

2.77 HIGH DENSITY INTERCONNECT MATERIALS (HDI) – Thin insulating materials used to support conductor materials requiring mechanical strength from a separate core material and are intended for the production of microvias using sequential build-up and related multilayer interconnect technologies. Some examples of HDI materials: resin coated copper (RCC), liquid photoimageable (LPI) dielectric coating materials, photoimageable film dielectric coating materials, and other thin insulating materials when used to support conductor material shall be considered HDI material.

2.78 HYBRID PRINTED WIRING BOARD – A multilayer board comprised of various combinations of dissimilar base materials and/or bonding layers with different UL/ANSI grades and/or Non-ANSI material.

AVA Documents
Document Sharing Hub

Full document details: UL 796 2023

2.79 IDENTICAL PROCESSING – Production or fabrication processes with the same manufacturing steps required to fabricate a board.

2.80 IMMERSION SILVER – Consists of a very thin coating typically less than 0.55 microns (0.0217 mils) of nearly pure silver created by galvanic displacement and may contain a slight amount of organic material deposited with the silver.

2.81 INDUSTRIAL LAMINATE – Insulating material consisting of reinforcement impregnated or coated with a resin and laminated under pressure and high temperature with or without vacuum assist. The resin may contain filler and additives. The reinforcement may be fibrous material such as cellulose paper, cotton, woven aramid, nonwoven aramid, woven glass, random laid glass mat or other fibers and films. See Base Material.

2.82 INFRARED REFLOW (IR) – Melting of tin/lead or remelting of solder using infrared heat as the primary source of energy.

2.83 INTERNAL LAYER – A conductor pattern contained entirely within a multilayer board construction.

2.84 LAMINATE – The product of bonding two or more layers of material.

2.85 LAMINATE THICKNESS – The thickness of the dielectric material in a singlesided or doublesided singlelayer metal-clad base material.

2.86 LAYER-TO-LAYER SPACING – The thickness of dielectric material between adjacent conductor planes (i.e., the physical distance between adjacent conductor planes).

2.87 LEGEND INK – See Marking Ink.

2.88 MARKING INK – A non-conductive permanent coating, resistant to solvents and chemicals, used to provide a means of identification in the form of letters, numbers, symbols and patterns to identify component locations and orientation to aid in printed wiring board assembly.

2.89 MASS LAMINATING – An assembly of base material layers and bonding layers laminated together, and which is performed by a base material manufacturer or any other source outside the printed wiring board fabricator's facility. Mass laminating is performed in several ways. Two examples are:

a) The manufacturer of the base material receives the inner layers etched by the printed wiring board fabricator and, with a bonding layer supplied by the printed wiring board fabricator or from his own stock, laminates the boards with a solid metal sheet on the external surfaces.

b) The manufacturer of the base material receives art work from the printed wiring board fabricator or generates his own art work to prepare the inner layers, etches the inner layers of his own in-house base material, and with a bonding layer laminates the boards with a solid metal sheet on the external surfaces.

After either of the above procedures, the laminator returns to the printed wiring board fabricator a composite of internal layers and solid metal external layers for final etching of external surfaces and/or plating operations.

2.90 MAXIMUM OPERATING TEMPERATURE (MOT) – The maximum operating temperature is the maximum continuous use temperature that the board may be exposed to under normal operating conditions.

AVA Documents
Document Sharing Hub

Full document details: UL 796 2023

2.91 METAL BASE LAMINATE – A metal core used as the support for a dielectric insulating material or base material applied to one or both sides of the metal core surface.

2.92 METAL BASE PRINTED WIRING BOARD – A printed board having a metal core as the mechanical support for the dielectric structure. If the metal core is intended to be electrically conductive and provide a path for electricity to transmit, it shall be evaluated as a conductor. See Section 10, Conductors.

2.93 METAL-CLAD BASE MATERIAL – Base material with integral metal conductor material, on one or both sides.

2.94 METAL CLAD LAMINATE – See Metal Clad Base Material.

2.95 METAL CORE BOARDS – See Metal Base Printed Wiring Boards.

2.96 METAL CORE LAMINATE – See Metal Base Laminate.

2.97 METAL WEIGHT – See Conductor Weight.

2.98 MIDBOARD CONDUCTOR – A conductor spaced more than 0.40 mm (0.015 inch) from the edge of a printed wiring board.

2.99 MINIMUM CONDUCTOR WIDTH – The minimum width conductor present on the sample or production printed wiring board. See Conductor Base Width.

2.100 MULTILAYER – Consists of alternate layers of conductors and base materials bonded together, including at least one internal conductive layer.

2.101 MULTISITE PROCESSOR – An outside contractor performing defined non-critical board manufacturing steps, including, but not limited to, process steps with temperatures below 100°C or MOT. The multisite processor shall return the boards to the original board manufacturer and may not ship boards directly to the end product manufacturer. See Subcontractor.

2.102 PATTERN – An arrangement of conductive material on a printed wiring board.

2.103 PEELABLE RESIST – A temporary resist applied to a limited area of the printed wiring board to protect certain holes or features such as contact fingers from accepting solder, and is removed from the printed wiring board before installation in the end product.

2.104 PERFORMANCE LEVEL CATEGORIES (PLC) – An integer defining a range of test values for a given electrical or mechanical property test.

2.105 PERMANENT COATING – See Permanent Materials.

2.106 PERMANENT MATERIALS – Materials intended to be a part of the board, for the life of the product.

2.107 PERMANENT RESIST – A solder resist or mask material intended to be a part of the board, for the life of the product.

2.108 PLATED-THROUGH HOLE – A connection by means of a plating process that deposits a conductive material on the side of a hole to connect conductor patterns on or in a two-sided or multilayer printed wiring board.

AVA Documents
Document Sharing Hub

Full document details: UL 796 2023

2.109 PLATING – A chemically or electrochemically deposited metallic coating.

2.110 PLATING-UP – The addition of plating material onto existing conductor or plating material.

2.111 PLUGGED-HOLE MATERIAL – A nonmetallic substance used to plug through holes, buried or blind vias, etc., and applied by some process, such as dipping, curtain coating, film laminating, screening, spraying, or melt-flow.

2.112 PREPREG – Fibrous reinforcement material impregnated or coated with a thermosetting resin binder, and consolidated and cured to an intermediate stage semi-solid product (B-stage resin).

2.113 PRINTED BOARD – See Printed Circuit Board and Printed Wiring Board.

2.114 PRINTED CIRCUIT BOARD – A printed board produced from rigid industrial laminate material that provides point-to-point connections and printed components in a predetermined arrangement. See Printed Wiring Board and Printed Board.

2.115 PRINTED CONDUCTOR – A conductor applied to a base material, or to an existing conductor on base material, by means of a printing process.

2.116 PRINTED WIRING – A pattern of conductive material formed on the surface of a base material primarily for point-to-point electrical connections or shielding.

2.117 PRINTED WIRING BOARD – A completely processed combination of a printed-wiring pattern, including printed components, and the base material. See Printed Circuit Board and Printed Board.

2.118 PRINTING – Reproducing a pattern on a surface by any process.

2.119 PRODUCTION BOARD – A complete fabricated board, intended for shipment.

2.120 PRODUCTION PROCESS – Fabrication process used to produce boards intended for end-use products.

2.121 REINFORCEMENT MATERIAL – Any material (i.e. fibrous, continuous, sheet, etc.) capable of enhancing the base material mechanical or physical performance.

2.122 RELATIVE THERMAL INDEX (RTI) – Maximum service temperature for a material, where a class of critical properties will not be unacceptably compromised through chemical thermal degradation, over the reasonable life of an electrical product, relative to a reference material having a confirmed, acceptable corresponding performance-defined RTI.

2.123 RESIN COATED COPPER FOIL (RCF) – Metal foil coated with unreinforced resin using a single- (one pass) or double- (two pass) coated system. Single-coated foils are usually coated with one layer of B-stage resin. Double-coated foils are usually coated with two layers of resin; C-stage resin adjacent to the foil and B-stage resin on the surface of the C-stage resin.

2.124 RESIST COATING – A material supplied in liquid or film form to mask or protect selected areas of a pattern from the effects of an etchant, solder, or plating and which remains on the printed wiring board after processing.

2.125 RIGID INDUSTRIAL LAMINATE – Fibrous reinforcement material impregnated or coated with a thermosetting resin binder, and consolidated under high temperature and pressure into a dense solid product.

AVA Documents
Document Sharing Hub

Full document details: UL 796 2023

2.126 RIGID PRINTED WIRING BOARD – A printed wiring board produced using rigid base dielectric materials.

2.127 SAMPLE – A test vehicle made from a complete or portion of production board, or a coupon formed using all steps of the board production process and incorporating specific construction features.

2.128 SILVER MIGRATION – The ionic movement of silver due to migration inducing affects.

2.129 SINGLELAYER – Singlelayer board constructions are doublesided constructions with one layer of dielectric materials(s) separating the conductor planes, and singlesided constructions with a single conductor plane on one side of a dielectric materials(s).

2.130 SINGLESIDED – A board with conductor pattern on one side of the dielectric material(s).

2.131 SOLDER – A metal alloy with a melting temperature below 427°C (800°F).

2.132 SOLDER MASK – See Solder Resist.

2.133 SOLDER RESIST – A coating material used to mask or to protect selected areas of the printed wiring board from solder deposition or plating.

2.134 SOLDERING – ASSEMBLY SOLDERING PROCESS – The process used for soldering components to a printed wiring board during the assembly process. The soldering process may include but is not limited to reflow, wave, selective soldering or other equivalent soldering techniques.

2.135 SOLDERING – SELECTIVE SOLDERING – An automated process used for soldering components to a printed wiring board during the assembly process. The process targets only selected components on a printed wiring board. The complete printed wiring board may not be subject to the same thermal profile during these soldering processes. Selective Soldering encompasses different techniques but excludes Surface Mount Technology (SMT) reflow soldering and traditional wave soldering. Examples of Selective Soldering are – Laser Soldering, Miniature Wave Select Solder Fountains, and Point-to-Point Robotic Soldering.

2.136 SUBCONTRACTOR – An outside contractor performing defined critical board manufacturing steps, including, but not limited to, process steps with temperatures equal to or above 100°C or above the MOT, whichever is greater. The subcontractor shall return the boards to the original board manufacturer and may not ship boards directly to the end product manufacturer. See Multisite Processor.

2.137 SUBSTRATE – See Core Material.

2.138 SURFACE FINISH – See Surface Plating/Coating.

2.139 SURFACE MOUNTING – Electrical connection of components on the surface of the conductor pattern.

2.140 SURFACE MOUNT COMPONENT – A leaded or leadless component capable of being attached to an interconnect construction by surface mounting.

2.141 SURFACE PLATING/COATING – The surface plating/coating shall be on the top surface of patterned conductors and shall not create an interface with the dielectric surface.

2.142 TEMPERATURE PROFILE – The temperatures a select point traverses as it passes through a process involving multiple temperatures and dwell times.

AVA Documents
Document Sharing Hub
Full document details: UL 796 2023

2.143 TEMPORARY RESIST – A solder resist or mask material intended to be removed from the printed wiring board before installation into the end-product.

2.144 TEST PATTERN – The conductor pattern intended for test and inspection purposes.

2.145 TYPE – A unique model or product designation arbitrarily assigned to a board by the fabricator. See Markings, Section 36.

2.146 UL/ANSI TYPE MATERIAL – A specific type designation for materials defined in the Standard for Polymeric Materials – Industrial Laminates, Filament Wound Tubing, Vulcanized Fibre, and Materials Used in Printed Wiring Boards, UL 746E, as having certain base material, resin, thermal index and profiles of minimum performance.

2.147 UNCLAD – A dielectric or laminate material without foil or conductive material (never copper clad).

2.148 VIA – A conductor plated through-hole, in which there is no intent to insert a component lead or other reinforcement material, for interlayer connection of conductor planes. See also "Blind Via" and "Buried Via".

2.149 VOID – A defect that leaves an area on an element of a printed wiring board without a metallic or nonmetallic coating.

2.150 X-AXIS – A reference axis, usually horizontal or left-to-right direction in a two dimension coordinate system.

2.151 Y-AXIS – A reference axis, usually vertical or bottom-to-top direction in a two dimension coordinate system. The x and y axis are usually perpendicular to one another, in a two or three dimension coordinate system.

2.152 Z-AXIS – The axis perpendicular to the plane created by the x and y reference axis. This axis usually refers to the thickness of a board construction.

3 Units of Measurement

3.1 Values stated without parentheses are the requirement. Values in parentheses are explanatory or approximate information.

4 Measurement Accuracy and Testing Conditions

4.1 A measuring device used to perform the tests in this standard shall be capable of measuring the specified parameter with an accuracy within 10 percent of the measured parameter.

4.2 Prior to all tests, subject all samples to a stabilization period in accordance with the Standard Practice for Conditioning Plastics for Testing, ASTM D618, and the Standard for Plastics – Standard Atmospheres for Conditioning and Testing, ISO 291, for a minimum of 40 hours at 23 ±2°C (73.4 ±3.6°F) and 50 ±10 percent RH, unless specified otherwise in the individual test method.

4.3 During the test, the standard atmospheric conditions surrounding the sample shall be 25°C ±10°C (77° F ±18° F) and 50 ±10 percent relative humidity, unless otherwise specified in the individual test method.

Documents
Document Sharing Hub
Full document details: UL 796 2023

5 Supplementary Test Procedures

5.1 These requirements are intended to be used in conjunction with the following requirements or standards:

a) The Standard for Polymeric Materials – Short Term Property Evaluations, UL 746A, the Standard for Polymeric Materials – Long Term Property Evaluations, UL 746B, the Standard for Polymeric Materials – Industrial Laminates, Filament Wound Tubing, Vulcanized Fibre, and Materials Used in Printed Wiring Boards, UL 746E, and the Standard for Polymeric Materials – Flexible Dielectric Film Materials Used in Printed Wiring Boards and Flexible Materials Interconnect Constructions, UL 746F, contain programs for investigating polymeric materials and industrial laminates.

b) The Standard for Tests for Flammability of Plastic Materials for Parts in Devices and Appliances, UL 94, contains methods for evaluating the flammability of polymeric materials that are intended to be used in electrical equipment.

c) The Standard for Flexible Materials Interconnect Constructions, UL 796F, covers the minimum performance requirements for flexible printed wiring boards.

6 Referenced Publications

6.1 Any undated reference to a code or standard appearing in the requirements of this standard shall be interpreted as referring to the latest edition of that code or standard.

6.2 The following publications are referenced in this standard:

ASTM D 149, Standard Test Method for Dielectric Breakdown Voltage and Dielectric Strength of Solid Electrical Insulating Materials at Commercial Power Frequencies

ASTM D 374, Standard Test Method for Thickness of Solid Electrical Insulation

ASTM D 618, Standard Practice for Conditioning Plastics for Testing

ASTM D 1000, Standard Test Method for Pressure-Sensitive Adhesive-Coated Tapes Used for Electrical and Electronic Applications

ASTM D 5423, Standard Specification for Forced-Convection Laboratory Ovens for Evaluation of Electrical Insulation

ASTM E 3, Standard Practice for Preparation of Metallographic Specimens

IPC TM-650 2.1.1, Microsectioning, Manual and Semi or Automatic Method

IPC TM-650 2.6.27, Thermal Stress, Convection Reflow Assembly Simulation

ISO 291, Plastics – Standard Atmospheres for Conditioning and Testing

7 General

7.1 The investigation of a printed wiring board shall include evaluation of the structural integrity, conductor properties (such as type of conductor, minimum midboard and edge width, minimum and maximum weight/thickness, maximum ground plane area, and solder limits) and flammability characteristics as affected by the manufacturing process.

7.2 Except as indicated in 7.3, the factors evaluated when testing the base material in its application shall include mechanical strength, moisture absorption, combustibility, resistance to ignition from electrical

AVA Documents
Document Sharing Hub

Full document details: UL 796 2023

sources, dielectric strength, insulation resistance, resistance to arc-tracking, and resistance to creeping and distortion at temperatures to which the material is subjected in the end product. The base material shall not display a loss of these properties beyond the minimum required level as a result of aging, and a Relative Thermal Index (RTI) shall be assigned to the base material.

7.3 When a printed wiring board is intended for connection only in low-energy circuits, in which the risk of electric shock or injury to persons is not involved, compliance of the printed wiring board shall, as a minimum, be determined by flammability testing (see Section 27, Flammability).

7.4 A printed wiring board requiring a maximum operating temperature (MOT) rating shall be investigated for thermal stress (Section 26), bond strength (Section 28), delamination and blistering (Section 29), conductive paste adhesion (Section 33) and dissimilar material thermal cycling (Section 31) if applicable based on the PWB construction, materials and end-use product application.

7.5 A printed wiring board requiring a flammability rating shall be investigated for thermal stress (Section 26) and flammability testing (Section 27) if applicable based on the PWB construction, materials, and end-use product application.

7.6 The investigation of a printed wiring board shall use special representative samples as described in this standard or production board samples. When a production sample is tested in lieu of the representative sample, the printed wiring board type shall be limited by the production construction tested.

CONSTRUCTION

8 General

8.1 Samples shall be constructed compliant with Sections 9 – 22 based on the finished production construction. Samples shall be manufactured using the production processes or a representative production process.

9 Base Materials

9.1 General

9.1.1 Printed wiring board test samples shall be provided for each different manufacturer and each different manufacturer's grade of base material or material family (see 9.1.4 and Table 9.1), except as described in 16.2 [Singlelayer Metal-clad (MCIL/CCIL) base material program] or 17.8.1 (Multilayer Metal-clad laminate and prepreg materials program).

Table 9.1
UL/ANSI Base Material Sample Build Up Thickness Tolerance

UL/ANSI Type	Minimum thickness		Nominal thickness	
	mm	(Inch)	mm	(Inch)
X, XP, XPC, XX, XXP, XXX, XXXP,	0.71	(0.028)	0.8	(0.031)
XXXPC	1.45	(0.057)	1.6	(0.062)
C, CE	0.63	(0.025)	0.8	(0.031)
	1.40	(0.055)	1.6	(0.062)
L, LE	0.63	(0.025)	0.8	(0.031)

Table 9.1 Continued on Next Page

Documents
Document Sharing Hub
Full document details: UL 796 2023

Table 9.1 Continued

UL/ANSI Type	Minimum thickness		Nominal thickness	
	mm	(Inch)	mm	(Inch)
	1.45	(0.057)	1.6	(0.062)
G-3, G-5, G-7, G-9, G-11	0.63	(0.025)	0.8	(0.031)
	1.40	(0.055)	1.6	(0.062)
FR-1, FR-2, FR-3	0.71	(0.028)	0.8	(0.031)
	1.45	(0.057)	1.6	(0.062)
FR-5, CEM-1, CEM-3.0, CEM-3.1, GPO-2, GPO-3	0.63	(0.025)	0.8	(0.031)
	1.40	(0.055)	1.6	(0.062)
G-10, FR-4.0, FR-4.1, GPY	0.38	(0.015)	0.43	(0.017)
	0.63	(0.025)	0.8	(0.031)
	1.40	(0.055)	1.6	(0.062)
NOTE – Samples submitted with a thickness between the minimum thickness and the nominal thickness are to receive a rating corresponding to the minimum thickness.				

9.1.2 When a difference in the base material catalog number or grade reflects a minor change, such as a change of color not affecting the base characteristics or a different manufacturing location for the same supplier, a separate board assembly is not needed.

9.1.3 The base material shall have acceptable mechanical and electrical relative thermal indices (RTIs) and acceptable performance properties including flammability classification at the thickness range and at the intended maximum operating temperature (MOT) of the completed printed wiring board. The base material mechanical and electrical RTIs and performance properties shall be determined in accordance with the Standard for Polymeric Materials – Industrial Laminates, Filament Wound Tubing, Vulcanized Fibre, and Materials Used in Printed Wiring Boards, UL 746E

Exception No. 1: If the PWB is evaluated for flammability classification only without consideration of an MOT rating, the base material need not possess mechanical and electrical RTIs or direct support performance properties.

Exception No. 2: Ceramic base materials without any polymer content do not require mechanical and electrical RTIs when evaluated for use in a PWB with an MOT rating.

9.1.4 A UL/ANSI sample representing the board minimum thickness shall be provided in the base material minimum thickness as indicated in Table 9.1. A UL/ANSI multilayer sample with laminate and prepreg sheets built up to a thickness representing the board minimum build up thickness shall be provided in the UL/ANSI base material build up thickness tolerances indicated in Table 9.1. Additional guidelines regarding multilayer sample construction are in Section 17, Multilayer Printed Wiring Boards, and Section 23, Test Samples. UL/ANSI samples submitted with a thickness between the minimum thickness and the nominal thickness are to receive a rating corresponding to the minimum thickness.

Exception: When two boards, nominally 0.79 and 1.57 mm (0.031 and 0.062 inch) thick, employ the same type of base material and both are rated at the same maximum temperature rating, a bond-strength test on the nominal 1.57 mm (0.062 inch) thick base material is representative of the 0.79 mm (0.031 inch) thick base material.

9.1.5 A non-UL/ANSI board or a UL/ANSI sample representing the board minimum thickness in a thickness not represented in Table 9.1 shall be provided in the base material thickness tolerances given in Table 9.2, if not previously investigated per 9.1.4.

AVA Documents
Document Sharing Hub
Full document details: UL 796 2023

Table 9.2
Base Material Sample (Build Up and Sheet) Thickness Tolerance

Base material nominal thickness,		Thickness tolerance,	
mm	(in)	mm	(in)
Less than 0.020	(Less than 0.0008)	±0.003	(±0.0001)
≥0.020 – <0.074	(≥0.0008 – <0.003)	±0.010	(±0.0004)
≥0.074 – <0.099	(≥0.003 – <0.004)	±0.013	(±0.0005)
≥0.099 – <0.19	(≥0.004 – <0.007)	±0.02	(±0.0008)
≥0.19 – <0.37	(≥0.007 – <0.015)	±0.03	(±0.0012)
≥0.37 – <0.49	(≥0.015 – <0.019)	±0.04	(±0.0016)
≥0.49 – <0.62	(≥0.019 – <0.024)	±0.05	(±0.0019)
≥0.62 – <1.59	(≥0.024 – <0.062)	±0.08	(±0.0031)
≥1.59 – <2.54	(≥0.062 – <0.100)	±0.10	(±0.004)
Greater than 2.55	(Greater than 0.100)	±0.13	(±0.005)

9.1.6 The board sample thickness shall be measured and tested in accordance with ASTM D 374, Method A or C. The deviation from the sample minimum thickness shall be within the allowable range or tolerance specified in Table 9.1 for UL/ANSI minimum base materials and Table 9.2 for Non-ANSI and other UL/ANSI base material thicknesses not represented in Table 9.1.

9.1.7 The base material, in an as-received condition, shall be free of defects that affect test results, such as unevenness in the base material, non-uniformity in any fabric weave or exposure of fibers or threads if applicable, and shall be evenly coated, without pinholes, blisters, and voids.

9.2 Metal-clad base material

9.2.1 The base material(s) and conductor(s) of the printed wiring board shall comply with the Bond Strength, Section 28, and Delamination and Blistering, Section 29, after Thermal Stress, Section 26, in accordance with the desired ratings.

9.2.2 The MOT rating shall not exceed the assigned RTI rating of the base material. Suggested values for the MOT rating include 90, 105, 130, and 150°C (194, 221, 266, and 302°F).

9.2.3 The printed wiring board shall comply with the Flammability test, Section 27, according to the desired flammability classification.

9.2.4 When the solder limits of the printed wiring board exceed those of the metal-clad base material, tests shall be conducted in accordance with Section 26, Thermal Stress (using the printed wiring board fabricator's solder limits), Section 28, Bond Strength, Section 29, Delamination and Blistering, Section 32, Plating Adhesion, and Section 27, Flammability.

Exception: The addition of alternate base materials, with solder limits less than the printed wiring board, without tests is acceptable when the printed wiring board fabricator substitutes a new type designation for the metal-clad base material which is assigned the same solder limits as the metal-clad base material and all other board parameters remain unchanged.

9.3 Direct support

9.3.1 A printed wiring board intended for direct support of current carrying parts at 120 V rms or less and 15 A or less shall comply with the performance test requirements in Table 9.3. The samples shall be

Documents
Document Sharing Hub
Full document details: UL 796 2023

investigated at the PWB minimum build-up thickness. A PWB intended for direct support of current carrying parts shall have an acceptable maximum operating temperature (MOT) rating for the end use product application.

Exception: The PWB direct support testing can be waived if each individual material in the build-up construction, used as a dielectric barrier and/or substrate for conductors, has previously been evaluated for each performance test in Table 9.3 and complies with the requirements.

Table 9.3
Direct Support Requirements (DSR) of PWB Materials

Test[c]	Units or PLC	V-0, V-1, V-2, HB, VTM-0[f], VTM-1[f], VTM-2[f]	Minimum thickness	
			mm	(inches)[d]
High current arc ignition	Max PLC	3	Actual[a]	
Hot wire ignition	Max PLC	4	Actual[a]	
Volume resistivity – dry	Min ohm-cm x 10^6	50	1.6	(0.062)[e]
Volume resistivity – wet	Min ohm-cm x 10^6	10	1.6	(0.062)[e]
Dielectric strength – dry	kV per mm	6.89	1.6	(0.062)[e]
Dielectric strength – wet	kV per mm	6.89	1.6	(0.062)[e]
Comparative tracking index	Max PLC	4	3.0	(0.13)[e]
Heat deflection	Degrees C	b	3.0	(0.13)[e]

[a] Actual thickness or minimum thickness of material being evaluated.

[b] Not required for thermosets and films; for thermoplastics, at least 10°C (18°F) above rated operating temperature with 90°C (194°F) minimum value.

[c] Testing is to be as described in the Standard for Polymeric Materials – Short Term Property Evaluations, UL 746A.

[d] Test sample thickness on which the index value is to be based.

[e] Test sample representative of all thicknesses.

[f] VTM-0, VTM-1, and VTM-2, ratings apply only to de-clad films.

10 Conductors

10.1 Materials

10.1.1 Printed-wiring conductors shall be of etched, die-stamped, pre-cut, flush-press, or additive-type copper, copper alloy, aluminum, silver, or other conductive material having similar corrosion resistant properties.

10.2 Silver

10.2.1 A printed wiring board employing conductors consisting of silver, electroless or electroplated silver plating, or silver paste shall be investigated for silver migration on each generic base material in accordance with Section 35, Silver Migration Test.

Exception No. 1: Boards intended for use in Flammability-only applications do not require a silver migration investigation. Flammability Only boards require a unique Type designation.

Exception No. 2: Boards employing conductors coated with Immersion Silver do not require a silver migration investigation.

AVA Documents
Document Sharing Hub
Full document details: UL 796 2023

Exception No. 3: Boards employing silver material encased in copper (such as a plated through hole containing silver material and capped by copper plating) do not require a silver migration investigation.

Exception No. 4: Boards employing silver material on the internal layers of a multilayer construction and are not exposed to the board surface and/or solder resist do not require a silver migration investigation.

Exception No. 5: Boards employing conductors coated with Tin-Silver-Copper [Sn-Ag-Cu(SAC)] alloy, other silver containing tertiary alloys, and Tin-Silver (SnAg) alloy do not require a silver migration investigation.

10.2.2 A printed wiring board employing conductors consisting of silver, electroplated silver, or silver paste covered with a permanent coating, such as solder resist, shall be investigated for silver migration with each permanent coating in accordance with Section 35, Silver Migration Test.

Exception: Boards employing silver material not covered with a permanent coating may represent boards coated with a permanent coating for the purpose of silver migration testing.

10.3 Conductive coating

10.3.1 Samples shall contain a representative conductive coating that is used on the finished board. If solder is used, the solder shall be smooth with uniform coverage over the conductor surface.

10.3.2 Paste-type conductive coatings and/or conductors, such as carbon, copper, silver or other conductive coatings, shall be investigated for adhesion to the printed wiring board in accordance with Section 33, Conductive Paste Adhesion Test. Based on the printed wiring board production construction, paste type conductor adhesion shall be evaluated on each generic base laminate in combination with each printed wiring board surface, such as base laminate, metal and paste-type conductors, undercoats (solder resist), in through holes, and the like.

10.4 Edges and width

10.4.1 The width dimension as measured at the interface surface shall constitute the minimum required conductor width.

10.5 Pattern surfaces

10.5.1 A surface shall be smooth, even, and free of wrinkles, holes, voids, blisters, corrosion, or other imperfections that impair the function of the board.

10.6 External copper foil or cladding process weight

10.6.1 Representative samples shall be investigated for each cladding material, minimum and maximum weight and each cladding process for the base material.

10.6.2 A retest is required when the weight of the copper foil or cladding process is to be increased or reduced beyond the existing limits. Testing shall be in accordance with Section 28, Bond Strength and Section 29, Delamination and Blistering.

10.6.3 For weights of external copper foil and/or cladding process up to and including 102 µm (3 oz/ft^2), the minimum weight to be used in production is representative of this range. For weights of external copper foil or cladding process less than 33 µm (1 oz/ft^2), the conductor shall be copper plated as close as possible to a total thickness of 33 µm (1 oz/ft^2) for test purposes, and is then representative of weights up to and including 102 µm (3 oz/ft^2).

AVA Documents
Document Sharing Hub
Full document details: UL 796 2023

10.6.4 For weights of external copper foil and/or cladding process heavier than 102 mic (3 oz/ft^2), investigation of the maximum weight to be used in production is representative of the copper weight range down to 102 mic (3 oz/ft^2). If the minimum external copper foil and/or cladding is thicker than 102 mic (3 oz/ft^2), the minimum and maximum external copper weight shall be investigated.

10.7 Midboard conductor

10.7.1 A pattern shall employ a midboard conductor of the minimum width to be used in production (see Figure 10.1). A midboard conductor is not prohibited from terminating with its smallest dimension on the edge of a board. The pattern shall also employ a 1.6 mm (0.062 inch) conductor width with an absolute minimum width of not less than 1.47 mm. Secondary conductor widths can be included in the sample pattern in the event the minimum conductor width receives non-compliant results.

Documents
Document Sharing Hub
Full document details: UL 796 2023

Figure 10.1

Typical Test Pattern Coupon for Bond Strength, Delamination, Plating and Conductive Paste Adhesion Testing

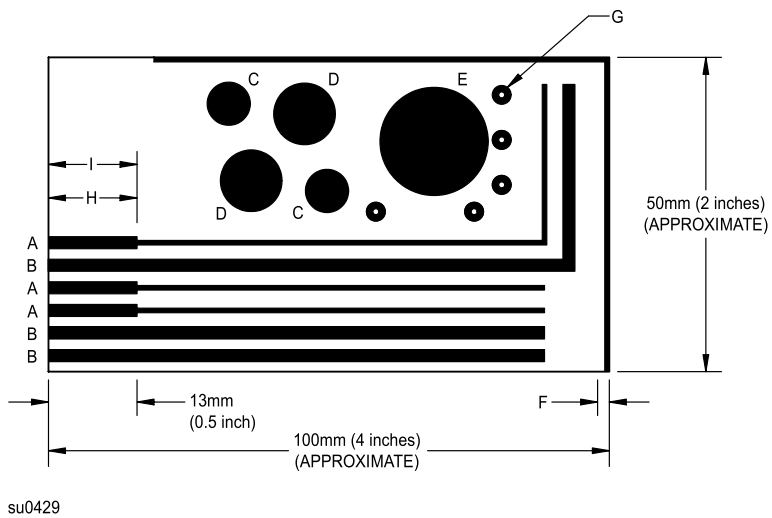

NOTES:

A – Minimum width conductor of configuration specified by the fabricator. See item K and 10.7.

B – 1.6 mm conductor with an absolute minimum width not less than 1.47 mm wide of configuration specified by the fabricator. See item K and 10.7.

B_1 – (Not Shown) one or more potential conductor widths may be included between the minimum conductor width A and the 1.6 mm conductor width B. See item K and 10.7.

C – 10 mm (0.375 inch) diameter unpierced circular conductor. See item L.

D – 13 mm (0.5 inch) diameter unpierced circular conductor. See item L.

E – Maximum diameter unpierced circular conductor specified by fabricator. See item K, 10.9, 10.14 and Figure 10.2.

E_1 – (Not Shown) Conductive coin specified by fabricator in the maximum size. See 10.15.

F – Edge conductor of a minimum width specified by the fabricator. Shall be within 0.40 mm (0.015 inch) of the board edge, and not sheared at the edge. See item K, item L, and 10.8.

F_1 – (Not Shown) Surface plating shall be applied on the conductor pattern if desired. See 10.12 for more information.

G – Plated-through holes. At least 4 plated-through holes shall be present on the sample. See item L and 10.11.

G_1 – (Not Shown) Plated via holes (blind, buried and microvia, filled and unfilled). At least 4 vias of representative types shall be present on the sample. See item L and 10.11.

H – Plated contacts, of minimum width. See 10.10.

I – Three contacts, of maximum width. See item K and 10.10.

J – (Not Shown) Embedded components shall be present on the sample. The embedded component location in the sample is determined based on the production board design and shall not contact other circuit pattern features. See item L and 15.3.

K – (Not Shown) Test pattern features shall be included on both the external and internal layers for multilayer samples. See 17.5.4 and 17.5.5.

L – (Not Shown) Feature optional but must be on samples if acceptance of this type of construction is desired.

M – (Not Shown) Test Pattern Artwork is available from the IPC. The artwork may require modifications to include the test pattern features to be evaluated. Association Connecting Electronics Industries, 3000 Lakeside Drive, Bannockburn, IL 60015, Phone: 847-615-7100, Fax: 847-615-7105, order number IPC A22.

Documents
Document Sharing Hub
Full document details: UL 796 2023

10.8 Edge conductor

10.8.1 A pattern shall employ a representative edge conductor of the minimum width to be used in production (see Figure 10.1). The edge conductor shall be within 0.40 mm (0.015 inch) of the board edge, and not sheared at the edge.

10.8.2 When an edge conductor width of less than three times the minimum width of a midboard conductor is intended in production (see 10.7), an edge conductor of the minimum width shall be provided (see item F of Figure 10.1) on the test sample. When an edge conductor is not provided with a width of less than three times the minimum width of a midboard conductor, then the board shall be assigned an edge conductor width at three times the minimum midboard conductor width.

10.9 Maximum unpierced conductor area (Maximum area diameter)

10.9.1 A pattern shall employ a representative conductor of the maximum area diameter to be used in production (see Figure 10.2).

10.9.2 The maximum unpierced conductor area of any pattern on a printed wiring board is determined by the largest circle that can be inscribed within the pattern (see Figure 10.2), not to exceed E in Figure 10.1. When it is intended that samples be tested with a circle of larger diameter than that which fits within the overall sample size dimensions shown in Figure 10.1, additional samples with a pattern containing the largest circle are to be tested. See Figure 10.3.

Figure 10.2

Maximum Unpierced Conductor Area Measurement

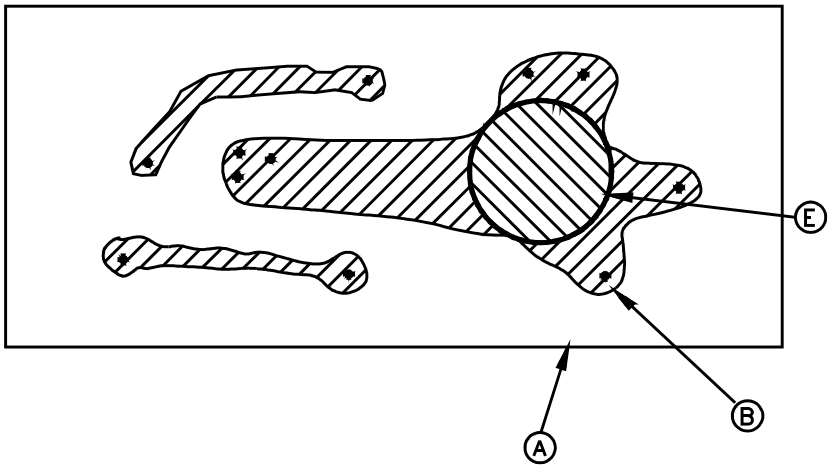

SB1035

A – Production printed wiring board.

B – Largest unpierced conductor section.

E – Largest circle that fits B (the area is not to exceed that of circle E in Figure 10.1).

Documents
Document Sharing Hub
Full document details: UL 796 2023

Figure 10.3

Delamination Test Pattern

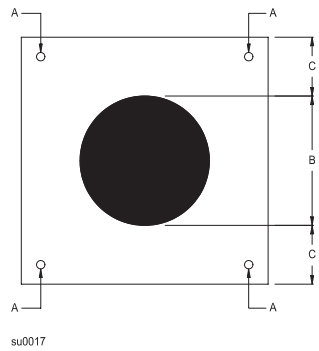

A – Plated – through holes. At least 4 plated-through holes shall be present on the sample. See item E and 10.11.

A_1 – (Not Shown) Plated via holes (blind, buried and microvia, filled and unfilled). At least 4 vias of representative types shall be present on the sample. See item E and 10.11.

B – Maximum diameter unpierced circular conductor specified by fabricator. See item D, 10.9, 10.14 and Figure 10.2.

C – Distance from edge of circular conductor (B) to edge of sample shall be sufficient to accommodate plated through holes (A) and/or plated via holes (A1).

D – (Not Shown) Test pattern features shall be included on both the external and internal layers for multilayer samples. See 17.5.4 and 17.5.5.

E – (Not Shown) Feature optional but must be on samples if acceptance of this type of construction is desired.

10.10 Contact surface plating

10.10.1 When plated contacts are intended to be used on production boards, at least three plated contacts including the minimum and maximum width shall be provided on the test sample (see item H and item I of Figure 10.1). Plated contacts shall be investigated in accordance with Section 32, Plating Adhesion, to determine plating adhesion to the conductor surface. If the maximum width plated contact does not fit in the sample dimensions shown in Figure 10.1, additional samples with a pattern containing the maximum width plated contacts are to be tested. See Figure 10.3 as an example.

Exception: Plated contacts are required only if the plating is different from the midboard and edge conductor.

10.10.2 Plating of a contact surface shall be uniform, smooth, and without nodules. Contact plating shall adhere well to the conductor surface and, to provide a full contact area, it shall extend to the conductor edges.

10.11 Plated-through holes and via holes

10.11.1 When plated-through holes are intended to be used on production boards, at least four plated-through holes shall be provided on the test sample (see item G of Figure 10.1 and item A of Figure 10.3). The plated-through hole sample location is optional and shall not contact other circuit pattern features. Plated through holes shall be investigated in accordance with Interlayer connections, 17.7; Delamination and Blistering, Section 29; and Plating Adhesion, Section 32.

10.11.2 When plated vias (blind, buried and microvia, filled and unfilled) are intended to be used on mulitlayer production boards, at least four vias shall be provided on the test sample (see item G_1 of Figure 10.1). The vias sample location is optional and shall not contact other circuit pattern features. Vias shall be investigated in accordance with Delamination and Blistering, Section 29. Vias filled with plugged hole material shall be investigated in accordance with Plugged-Hole Materials, Section 14. If the filled and/or

AVA Documents
Document Sharing Hub
Full document details: UL 796 2023

unfilled vias do not fit in the sample dimensions shown in Figure 10.1, additional samples with a pattern containing the plated vias are to be tested. See Figure 10.3 as an example.

10.12 Additional conductive plating

10.12.1 When one or more additional platings are intended to be used on production boards that normally do not include plating, and when no additional etchant is used in the plating process, one plating may be selected as representative and shall be provided on the test samples.

Exception: If silver is used as a conductive plating (excluding Immersion Silver), see 10.2.1 for additional requirements.

10.13 Assembly soldering process – solder limits

10.13.1 Assembly soldering process (solder limits) are profile (s), temperature (s) and time (s) representing the anticipated printed wiring board production assembly process(es). The acceptability of the assembly soldering process is determined by investigation of the PWB physical properties following the thermal stress test. The assembly soldering process is not prescriptive and does not represent the exact assembly soldering process.

Exception: Hand soldering processes do not require thermal stress conditioning before investigation of the PWB properties.

10.13.2 The board maximum surface temperature during the assembly soldering process determines the thermal stress test peak temperature.

10.13.3 PWBs for use with reflow assembly processes shall be thermally stressed using the default 260°C profile with thermal stress conditions of 260°C peak temperature and six (6) cycles to represent multiple soldering processes and potential rework. If a low temperature profile is being used in assembly, the PWB fabricator can specify the 245°C or 230°C profile for testing. If a lower number of cycles are being used in assembly, the PWB fabricator can specify three (3) cycles instead of six (6) cycles.

10.13.4 If special/unique thermal stress reflow conditions are defined by PWB fabricator or OEM/ODM purchase order, the following parameters are needed: ramp rate (R1), cooling rate (C1), peak temperature (T2), dwell time (t2) and the number of cycles (X).

10.13.5 PWBs for use with wave soldering and/or selective soldering assembly processes shall be thermally stressed using conditions specified by the PWB fabricator: the maximum temperature, maximum time, and maximum cycles. Unless specified otherwise by the PWB fabricator, the default standardized conditions described in 10.13.3 for reflow assembly shall represent wave soldering and/or selective soldering processes.

10.13.6 Assembly soldering process parameters are used for thermal stress conditioning samples in the following tests listed in Table 10.1.

10.13.7 A retest is required if the PWB assembly soldering process parameters are to be increased above the existing assembly profile temperature, time and/or cycle parameters.

Documents
Document Sharing Hub
Full document details: UL 796 2023

Table 10.1
Assembly Soldering Process Test Methods

Test	Section
Flammability	27
Bond strength	28
Delamination	29
Conductive paste adhesion	33
HDI thermal cycling bond strength	34

10.14 Pattern

10.14.1 A conductor pattern shall include sizes, platings, and contacts in a configuration specified by the fabricator. See Figure 10.1 for a typical test pattern.

10.14.2 A retest is necessary when a reduction in the minimum width of conductor is desired. Testing shall be in accordance with Section 26, Thermal Stress, and Section 28, Bond Strength, and samples need contain only the new reduced-width conductors because only bond strength testing shall be performed after total conditioning.

10.14.3 Referring to Figure 10.1, the solid, unpierced circle of conductive material represents the maximum unpierced conductor area capable of being used in any printed-wiring pattern.

10.15 Conductive coin

10.15.1 When a conductive coin is intended to be used in the production board, the test sample shall contain a conductive coin of the maximum size. (See item E_1 of Figure 10.1). Samples or the production board with conductive coins shall be investigated in accordance with Delamination and Blistering, Section 29, and Dissimilar Dielectric Material Delamination Test, Section 31.

10.15.2 If the overall size of the conductive coin with regard to length and/or width does not fit in the sample dimensions shown in Figure 10.1, additional samples containing the maximum size coin are to be tested. See Figure 10.3 as an example.

10.15.3 If adhesive is used with the conductive coin, the adhesive shall be evaluated in accordance with Adhesives for Conductor Bonding, Section 11.

11 Adhesives for Conductor Bonding

11.1 An adhesive used to bond the conductive material to the base material shall not be water soluble.

11.2 If the adhesive used to bond the conductive material has not been previously evaluated as an integral part of a (conductor-clad) base material in accordance with the applicable testing requirements in the Standard for Polymeric Materials – Industrial Laminates, Filament Wound Tubing, Vulcanized Fibre, and Materials Used in Printed Wiring Boards, UL 746E, the adhesive shall be subject to Infrared Analyses, Bond Strength, Section 28, Delamination and Blistering, Section 29, and Flammability, Section 27. The adhesive shall also be evaluated with the following tests for Direct Support requirements: Comparative Tracking Index (CTI), High Current Arc Ignition (HAI), and Hot Wire Ignition (HWI). Testing is to be performed in accordance with the Standard for Polymeric Materials – Short Term Property Evaluations, UL 746A .

Documents
Document Sharing Hub
Full document details: UL 796 2023