UL 810

STANDARD FOR SAFETY

Capacitors

Documents
Document Sharing Hub

Full document details: UL 810 2023

Documents
Document Sharing Hub

Full document details: UL 810 2023

UL Standard for Safety for Capacitors, UL 810

Sixth Edition, Dated October 29, 2019

Summary of Topics

This revision of ANSI/UL 810 dated August 22, 2023 is being issued to incorporate the following requirements:

> ***– Addition of requirements for medium voltage power banks in a new Part III; 1.5A, 1.8, Sections 57 – 76***
>
> ***– Miscellaneous revisions throughout the Standard; 1A – 1C, Section 3, 31.1 and Annex A***

Text that has been changed in any manner or impacted by ULSE's electronic publishing system is marked with a vertical line in the margin.

The new and revised requirements are substantially in accordance with Proposal(s) on this subject dated June 2, 2023.

All rights reserved. No part of this publication may be reproduced, stored in a retrieval system, or transmitted in any form by any means, electronic, mechanical photocopying, recording, or otherwise without prior permission of ULSE Inc. (ULSE).

ULSE provides this Standard "as is" without warranty of any kind, either expressed or implied, including but not limited to, the implied warranties of merchantability or fitness for any purpose.

In no event will ULSE be liable for any special, incidental, consequential, indirect or similar damages, including loss of profits, lost savings, loss of data, or any other damages arising out of the use of or the inability to use this Standard, even if ULSE or an authorized ULSE representative has been advised of the possibility of such damage. In no event shall ULSE's liability for any damage ever exceed the price paid for this Standard, regardless of the form of the claim.

Users of the electronic versions of UL's Standards for Safety agree to defend, indemnify, and hold ULSE harmless from and against any loss, expense, liability, damage, claim, or judgment (including reasonable attorney's fees) resulting from any error or deviation introduced while purchaser is storing an electronic Standard on the purchaser's computer system.

Documents
Document Sharing Hub

Full document details: UL 810 2023

No Text on This Page

Documents
Document Sharing Hub

Full document details: UL 810 2023

OCTOBER 29, 2019
(Title Page Reprinted: August 22, 2023)

ANSI/UL 810-2023

UL 810

Standard for Capacitors

First Edition – November, 1953
Second Edition – May, 1973
Third Edition – June, 1976
Fourth Edition – September, 1981
Fifth Edition – May 4, 1995

Sixth Edition

October 29, 2019

This ANSI/UL Standard for Safety consists of the Sixth Edition including revisions through August 22, 2023.

The most recent designation of ANSI/UL 810 as an American National Standard (ANSI) occurred on August 22, 2023. ANSI approval for a standard does not include the Cover Page, Transmittal Pages, and Title Page.

Comments or proposals for revisions on any part of the Standard may be submitted to ULSE at any time. Proposals should be submitted via a Proposal Request in the Collaborative Standards Development System (CSDS) at https://csds.ul.com.

Our Standards for Safety are copyrighted by ULSE Inc. Neither a printed nor electronic copy of a Standard should be altered in any way. All of our Standards and all copyrights, ownerships, and rights regarding those Standards shall remain the sole and exclusive property of ULSE Inc.

COPYRIGHT © 2023 ULSE INC.

Documents
Document Sharing Hub

Full document details: UL 810 2023

No Text on This Page

Documents
Document Sharing Hub

Full document details: UL 810 2023

CONTENTS

INTRODUCTION

1 Scope 9
1A Components 10
1B Units of Measurement 10
1C Referenced Publications 10
2 Glossary 12
3 General 14
3.1 Components 14
3.2 Units of measurement 14
3.3 Undated references 14

PART I – CAPACITORS

CONSTRUCTION

4 Enclosure 14
4.1 General 14
4.2 Metallic 14
4.3 Nonmetallic 15
5 Internal Protection Bridge 15
6 Insulating Material 15
7 Leads, Terminals and Internal Wiring 17
8 Spacings 19

PERFORMANCE

9 Pull-Out Test 20
10 Conductor Insulation Test 20
11 Mold Stress Relief Test (Terminals Blocks/Terminal Connectors) 21
12 Fault-Current Test 21
12.1 General 21
12.2 Sample preparation 23
12.3 Test method 23
12.4 Restrike test (expansion type protection only) 26
13 Dielectric Voltage-Withstand Test 26

MANUFACTURING AND PRODUCTION TESTS

14 Dielectric Voltage-Withstand Test 26

MARKINGS

15 General 27

PART II – POWER-FACTOR CORRECTION UNITS

GENERAL

16 Terminology 28

AVA Documents
Document Sharing Hub
Full document details: UL 810 2023

CONSTRUCTION

17 Frame and Enclosure 28
18 Accessibility of Uninsulated Live Parts, Moving Parts, and Film-Coated Wire 33
19 Protection Against Risks of Electric Shock and Injury to Persons 35
19.1 General 35
19.2 Live parts 35
19.3 Moving parts 35
19.4 Mechanical servicing 36
19.5 Electrical servicing 36
20 Assembly 36
21 Protection Against Corrosion 37
22 Supply Connections 37
23 Wiring Terminals and Leads 38
24 Wire Bending Space 40
25 Current-Carrying Parts 41
26 Internal Wiring 41
26.1 General 41
26.2 Protection of wiring 42
26.3 Electrical connections 42
27 Separation of Circuits 43
27.1 General 43
27.2 Separation barriers 44
27.3 Field wiring 44
28 Insulating Materials 45
29 Switches and Controls 45
30 Overload-Protective Devices 45
31 Fuses and Fuseholders 46
32 Printed Wiring 46
33 Spacings 46
33.1 General 46
33.2 Alternative spacings 48
33.3 Insulating liners or barriers for the reduction of spacings 49
33.4 Spacings for controlled environment applications 50
34 Secondary Circuits 51
34.1 General 51
34.2 Limited power sources 51
35 Grounding Connections 53
36 Bonding of Internal Parts 54

PERFORMANCE

37 General 56
38 Power Input Test 57
39 Draining of Charge Test 57
40 Secondary Circuit Evaluations 57
40.1 SELV determination 57
40.2 Limited power determination 57
41 Temperature Test 57
42 Dielectric Voltage-Withstand Test 60
43 Compression Test 60
44 Deflection Test 61
45 Tightening Torque Test 61
46 Static Load Test 61

Documents
Document Sharing Hub
Full document details: UL 810 2023

MANUFACTURING AND PRODUCTION TESTS

47 Dielectric Voltage-Withstand Test 61

RATINGS

48 Details 62

MARKINGS

49 General 63
50 Installation Instructions 64

OUTDOOR-USE UNITS

51 General 64
52 Construction 64
52.1 General 64
52.2 Corrosion protection 65
53 Rain Test 66
54 Gasket Tests 70
55 Metallic Coating Thickness Test 70
56 Markings 71

PART III – MEDIUM VOLTAGE POWER FACTOR CORRECTION CAPACITOR BANKS

GENERAL

57 Normal and Special Service Conditions 72
57.1 Normal service conditions 72
57.2 Special service conditions 72
58 Glossary 73
58.1 General 73
58.2 Equipment characteristics 74

CONSTRUCTION

59 Enclosure 74
59.1 Requirements in other standards 74
59.2 General requirements 74
59.3 Complete equipment 75
59.4 Exterior doors, covers, and similar parts of enclosures 75
59.5 Inspection windows 76
59.6 Ventilating openings, vent outlets (openings in enclosures) 76
59.7 Protection against corrosion 77
59.8 External operating handles and control devices 77
59.9 Barriers 77
59.10 Environmental enclosure considerations 78
60 Field-Wiring Connections 78
60.1 Medium voltage conductors 78
60.2 Low voltage conductors 79
60.3 Separation of circuits 80
61 Bus Bars 80
62 Internal Wiring 80
62.1 Conductors 80

Documents
Document Sharing Hub
Full document details: UL 810 2023

62.2 Support for internal wiring 81
62.3 Routing through a metal barrier 81
63 Insulating Materials 81
64 Provisions for Bonding and Grounding 82
64.1 Grounding of exposed metal parts 82
64.2 Provision for ground termination 82
65 Spacings 84
66 Capacitors and Switching Devices 84

PERFORMANCE

67 Short-Time Withstand Current Tests 85
67.1 General 85
67.2 Test circuit 85
67.3 Test arrangement 86
67.4 Test procedure 86
67.5 Evaluation of test results 86
67.6 Short-time Withstand Current Test on Ground Bus 86
68 Dielectric Tests 87
68.1 General 87
68.2 Impulse withstand tests 87
68.3 Power-frequency voltage withstand test 89
68.4 Test for bus bar insulation 90
69 Driven Rain Test 90
69.1 General 90
69.2 Test method 90
69.3 Evaluation 91
70 Mechanical Tests of Viewing Panes 91
70.1 General 91
70.2 Pressure test 91
70.3 Impact test 91
71 Rod Entry Test 91
72 Enclosure Ground Integrity Test 92

RATINGS

73 General 92

MARKINGS AND INSTRUCTIONS

74 General 92
75 External Conditions 93
75.1 General 93
75.2 Outdoor use 93
75.3 Terminals 93
76 Additional Equipment Information 94

Supplement SA – Electrolytic Capacitors

SA1 Scope 95
SA2 Glossary 95
SA3 General 95
SA4 Construction 95
SA4.1 Enclosure 95
SA4.2 Internal protection bridge 96

Documents
Document Sharing Hub
Full document details: UL 810 2023

SA4.3 Insulating material 95
SA4.4 Electrolyte 95
SA4.5 Leads and terminals 96
SA4.6 Spacings 96
SA5 Performance 96
SA5.1 General 96
SA5.2 Pull-out test 96
SA5.3 Torque test (screw terminals) 96
SA5.4 Heating (sealing) test 97
SA5.5 Pressure relief test 97
SA5.6 Dielectric voltage-withstand test 97
SA6 Markings 98
SA6.1 General 98
SA6.2 Instructions 98

ANNEX A (INFORMATIVE) Recommended Standards for Components

Documents
Document Sharing Hub

Full document details: UL 810 2023

No Text on This Page

Documents
Document Sharing Hub

Full document details: UL 810 2023

INTRODUCTION

1 Scope

1.1 The requirements in Part I of this Standard apply to enclosed capacitors with integral protection intended to reduce the risk of rupture and venting of the capacitor enclosure under internal fault conditions. These requirements apply to capacitors with expansion type protection rated 5 kV or less, and capacitors with segmented film type protection rated 2 kV or less that are intended for use with appliances, lighting equipment, air conditioning and refrigeration equipment, motors, and the like, that comply with the requirements for such appliances and equipment.

1.2 The requirements of Part I may also be used to evaluate the construction only of these types of capacitors with ratings greater than the values noted in 1.1 but no greater than 7.2 kV. Capacitors employing polymeric enclosures or capacitors employing a partial metallic enclosure (i.e. remainder of enclosure such as the cap/cover which is not crimped to the case) that are not provided with internal protection and intended to be located in circuits not requiring fault current protection may be evaluated using only the construction requirements of Part I.

1.3 The requirements in Part II of this standard apply to general-use power-factor-correction units consisting of one or more capacitors with or without protective fusing or overloads, with or without a switch or other disconnect device all within a protective enclosure; rated 600 V maximum and intended for power-factor correction of circuits in accordance with the National Electrical Code, NFPA 70. This equipment is intended for installation in ordinary locations, in accordance with the National Electrical Code, NFPA 70, where the ambient temperature does not exceed 40°C (104°F) maximum. See 1.4.

1.4 The requirements of Part II of this standard do not apply to power factor correction units containing automatic or other circuit monitoring/conditioning controls or automatic systems of multiple connected power factor correction units. Power factor correction units with these additional features shall be evaluated to the Standard for Industrial Control Panels, UL 508A as an industrial control panel.

1.5 A component capacitor used in a power factor correction unit as described in Part II of this Standard has been evaluated for across-the-line applications in accordance with Part I of this Standard and has been evaluated for a minimum fault current rating of 10k AFC.

1.5A The requirements in Part III cover equipment having ac voltage ratings above 1000 V, up to 46 kV, intended to provide power factor correction for AC power systems. The power factor correction banks covered by Part III of this Standard are metal-enclosed assemblies consisting of one or more shunt power capacitor(s), with or without additional controls and switching devices necessary to provide control of the power factor of the system to which the equipment is connected. The power factor correction equipment covered by Part III of this Standard may be rated for indoor or outdoor use, and cover equipment intended for use in ordinary locations in accordance with the National Electrical Code.

1.6 The requirements of Supplement SA apply to electrolytic capacitors for motor start or similar applications including dc circuits rated 600 V or less.

1.7 A capacitor that complies with the requirements in Part I of this standard is intended to be mounted within an appliance or within equipment for which an acceptable outer enclosure is provided.

1.8 The requirements in Part I, Part II, and Part III do not apply to capacitors covered by the Standard for Fixed Capacitors for Use in Electronic Equipment – Part 14: Sectional Specification: Fixed Capacitors for Electromagnetic Interference Suppression and Connection to the Supply Mains, UL 60384-14.

1.9 Other types of capacitors may be investigated to establish compliance with these requirements, and with such additional test criteria as may be found necessary.

AVA Documents
Document Sharing Hub
Full document details: UL 810 2023

1A Components

1A.1 A component of a product covered by this Standard shall:

a) Comply with the requirements for that component as specified in this Standard;

b) Be used in accordance with its rating(s) established for the intended conditions of use; and

c) Be used within its established use limitations or conditions of acceptability.

NOTE: See Annex A for a list of additional standards covering components generally used in the products covered by this Standard.

1A.2 A component of a product covered by this Standard is not required to comply with a specific component requirement that:

a) Involves a feature or characteristic not required in the application of the component in the product;

b) Is superseded by a requirement in this Standard; or

c) Is separately investigated when forming part of another component, provided the component is used within its established ratings and limitations.

1A.3 Specific components are incomplete in construction features or restricted in performance capabilities. Such components are intended for use only under limited conditions, such as certain temperatures not exceeding specified limits, and shall be used only under those specific conditions.

1A.4 A component that is also intended to perform other functions such as overcurrent protection, ground-fault circuit-interruption, surge suppression, any other similar functions, or any combination thereof, shall comply additionally with the requirements of the applicable UL Standard(s) that cover devices that provide those functions.

1B Units of Measurement

1B.1 Values stated without parentheses are the requirement. Values in parentheses are explanatory or approximate information.

1C Referenced Publications

1C.1 Any undated reference to a code or standard appearing in the requirements of this standard shall be interpreted as referring to the latest edition of that code or standard.

1C.2 The following publications are referenced in this Standard:

ASTM A90/A90M, *Standard Test Method for Weight [Mass] of Coating on Iron and Steel Articles with Zinc or Zinc-Alloy Coatings*

ASTM A653/A653M, *Standard Specification for Steel Sheet, Zinc-Coated (Galvanized) or Zinc-Iron Alloy-Coated (Galvannealed) by the Hot-Dip Process*

ASTM E162, *Standard Test Method for Surface Flammability of Materials Using a Radiant Heat Energy Source*

ASTM E230/E230M, *Standard Specification and Temperature-Electromotive Force (emf) Tables for Standardized Thermocouples*

AVA Documents
Document Sharing Hub

Full document details: UL 810 2023

IEEE 4, *Techniques for High-Voltage Testing*

IEEE No. 18, *Shunt Power Capacitors*

IEEE C37.04, *Ratings and Requirements for AC High-Voltage Circuit Breakers with Rated Maximum Voltage Above 1000 V*

IEEE C37.09, *Standard Test Procedures for AC High-Voltage Circuit Breakers with Rated Maximum Voltage Above 1000 V*

IEEE C37.24, *Guide for Evaluating the Effect of Solar Radiation on Outdoor Metal-Enclosed Switchgear*

IEEE C37.20.3, *Metal-Enclosed Interrupter Switchgear (1 kV–38 kV)*

IEEE 386, *Separable Insulated Connector Systems for Power Distribution Systems above 600 Volts*

ANSI/NEMA CC1, *Electric Power Connection for Substations*

NFPA 70, *National Electrical Code*

UL 50, *Enclosures for Electrical Equipment, Non-Environmental Considerations*

UL 50E, *Enclosures for Electrical Equipment, Environmental Considerations*

UL 62, *Flexible Cords and Cables*

UL 94, *Tests for Flammability of Plastic Materials for Parts in Devices and Appliances*

UL 224, *Tubing, Extruded Insulating*

UL 347, *Medium-Voltage AC Contactors, Controllers, and Control Centers*

UL 248-1, *Low-Voltage Fuses – Part 1: General Requirements*

UL 248-11, *Low-Voltage Fuses – Part 11: Plug Fuses*

UL 486A-486B, *Wire Connectors*

UL 508A, *Industrial Control Panels*

UL 723, *Test for Surface Burning Characteristics of Building Materials*

UL 746A, *Polymeric Materials – Short Term Property Evaluation*

UL 746B, *Polymeric Materials – Long Term Property Evaluations*

UL 746C, *Polymeric Materials – Use in Electrical Equipment Evaluations*

UL 796, *Printed Wiring Boards*

UL 810A, *Electrochemical Capacitors*

Documents
Document Sharing Hub

Full document details: UL 810 2023

UL 840, *Insulation Coordination Including Clearances and Creepage Distances for Electrical Equipment*

UL 969, *Marking and Labeling Systems*

UL 1059, *Terminal Blocks*

UL 1332, *Organic Coatings for Steel Enclosures for Outdoor Use Electrical Equipment*

UL 4248-1, *Fuseholders – Part 1: General Requirements*

UL 60384-14, *Fixed Capacitors for Use in Electronic Equipment – Part 14: Sectional Specification: Fixed Capacitors for Electromagnetic Interference Suppression and Connection to the Supply Mains*

UL 61058-1, *Switches for Appliances – Part 1: General Requirements*

2 Glossary

2.1 For the purpose of this standard the following definitions apply.

2.2 CAPACITOR ROLL – The layered and rolled interior windings of a capacitor, which is also known as the element.

2.3 CLASS 2 CIRCUIT – A circuit supplied by a Class 2 source in accordance with Article 725 of the National Electrical Code, NFPA 70.

2.4 COMPONENT CAPACITOR – Refers to a capacitor evaluated to Part I of the Standard. A component capacitor is also referred to as "capacitor."

2.5 CONTROLLED ENVIRONMENT – An environment that is relatively free of conductive contaminants, such as carbon dust and the like, that may result from the end-use equipment in which a capacitor or power-factor correction unit is installed or due to the location of the end-use equipment, and that is provided with protection against humidity and the formation of condensation.

2.6 DRY TYPE CAPACITOR – A capacitor that contains no liquid and utilizes a solid dielectric medium other than wax.

2.7 ELECTRODE, FOIL TYPE – Capacitor plates consisting of thin metal or “foil” separated by a dielectric.

2.8 ELECTRODE, METALLIZED – Capacitor plates consisting of dielectric material covered with metallic deposits such as aluminum on the surface. This type of electrode has a tendency to self restore or "re-heal" after local breakdown of the dielectric.

2.9 ELECTROLYTE – Current conducting solution (liquid, gel, or solid) between two electrodes or plates of an electrolytic capacitor at least one of which is covered by a dielectric film.

2.10 ELECTROLYTIC CAPACITOR – A capacitor consisting of two conducting electrodes whose anode has a metal oxide film. The oxide film acts as the dielectric or insulating medium. The electrode without the film and the electrolyte serve as the cathode. Electrolytic capacitors may be provided with either a solid or liquid electrolyte and may or may not be polarized.

2.11 ENCLOSURE – In Part I enclosure refers to the capacitor element housing. In Part II enclosure refers to the ultimate housing.

AVA Documents
Document Sharing Hub
Full document details: UL 810 2023

2.12 FIELD-WIRING TERMINALS – Terminals to which supply, control, output, or other permanent connections are made when the unit is installed.

2.13 HAZARDOUS LIVE PARTS – A live part having a potential greater than 30 Vrms (42.4 Vpeak) or 60 Vdc between the part and ground or a grounded part, or between adjacent live parts.

2.14 INTERNAL PROTECTION BRIDGE – A device that aids in the expansion of the capacitor enclosure in a direction that will interrupt the circuit, also referred to as a pressure interrupter.

2.15 LEAD – An insulated wire provided as the electrical connection to the capacitor.

2.16 LIMITED-POWER CIRCUIT – A circuit involving a potential of not more than 30 Vrms (42.4 Vpeak) or 60 Vdc and supplied by a limited power battery, a Class 2 transformer, or a combination of a transformer and a fixed impedance that as a unit complies with all the performance requirements for a limited power source as specified in Exception No. 2 of 34.1.1.

2.17 POLE LEAST LIKELY TO STRIKE TO GROUND – A pole that, by its position or potential or both relative to other poles of a capacitor or power-factor correction unit, considered to be less likely than any other to strike to ground. In a three pole device, this pole would usually be the middle pole. It is possible for several poles to be equally least likely to strike to ground. In this case any pole may be used for the test.

2.18 POWER FACTOR – The ratio of the actual power of an AC power producing product as measured by a wattmeter to the apparent power as measured by an ammeter and a voltmeter.

2.19 POWER-FACTOR CORRECTION – Addition of capacitors to an inductive circuit in order to increase the power factor by making the total current more nearly in phase with the applied voltage.

2.20 POWER-FACTOR CORRECTION UNIT – A group of capacitors housed in one enclosure that are connected ahead of an induction load (such as large motor driven equipment) to correct the power factor of that individual load. Also referred to as a unit in this standard.

2.21 PRESSURE SENSITIVE INTERRUPTER (EXPANSION TYPE PROTECTION) – An integral protection device that assists in the expansion process by providing resistance to internal pressure caused by a build-up of gases. Also referred to as an internal protection bridge.

2.22 PRIMARY CIRCUIT – A circuit that is directly connected to the AC main supply, for example, the means for connections to the AC supply, the primary windings of transformers, motors and other loading devices.

2.23 SAFETY CIRCUIT – Any primary or secondary circuit that is relied upon to reduce the risk of fire, electric shock, injury to persons, or electrical energy – high current levels. For example, in some applications, an interlock circuit is considered to be a safety circuit.

2.24 SAFETY EXTRA LOW-VOLTAGE (SELV) CIRCUIT – A secondary circuit which is designed and protected so that under normal and single fault conditions voltages do not exceed 30 Vrms (42.4 Vpeak) or 60 Vdc.

2.25 SECONDARY CIRCUIT – A circuit conductively connected to the secondary winding of an isolating power supply transformer. A secondary circuit has no direct physical connection to a primary circuit, but is coupled to the primary by electromagnetic induction only.

Documents
Document Sharing Hub
Full document details: UL 810 2023

2.26 SEGMENTED METALLIZED ELECTRODE (SEGMENTED FILM TYPE PROTECTION) – An integral protection means where the metallized type electrode disconnects, similar to the way a fuse operates, due to a surge in current under a fault condition.

2.27 SEPARATOR – A liner provided to insulate the contents of the electrolytic capacitor from the external metal can.

2.28 SUPPLY CIRCUIT – The circuit supplying electrical energy to the product from a branch circuit or battery feed.

2.29 VENTING MECHANISM – The means employed within an electrolytic capacitor to relieve pressure when the contents of the capacitor overheat due to a fault condition.

3 General

3.1 Components

3.1.1 *Deleted*

3.1.2 *Deleted*

3.1.3 *Deleted*

3.1.4 *Deleted*

3.2 Units of measurement

3.2.1 *Deleted*

3.3 Undated references

3.3.1 *Deleted*

PART I – CAPACITORS

CONSTRUCTION

4 Enclosure

4.1 General

4.1.1 A capacitor shall be provided within an enclosure that houses all live parts other than the supply leads, terminals, or discharge resistor.

4.2 Metallic

4.2.1 A metal enclosure shall be 0.010-in (0.25-mm) thick minimum, if of steel, and 0.016-in (0.41-mm) thick minimum, if of aluminum, brass, or copper.

Documents
Document Sharing Hub
Full document details: UL 810 2023

4.3 Nonmetallic

4.3.1 A polymeric material used as part or all of an enclosure shall comply with the applicable requirements in the Standard for Polymeric Materials – Use in Electrical Equipment Evaluations, UL 746C.

4.3.2 A polymeric material used as part or all of an enclosure shall:

a) Comply with the flammability test – 3/4-in (19.1-mm) flame, specified in the Standard for Polymeric Materials – Use in Electrical Equipment Evaluations, UL 746C; or

b) Be classed V-2 minimum in accordance with the Standard for Tests for Flammability of Plastic Materials for Parts in Devices and Appliances, UL 94.

4.3.3 The following are among the factors that shall be taken into consideration when using the Standard for Polymeric Materials – Use in Electrical Equipment Evaluations, UL 746C, to judge the acceptability of a nonmetallic material with respect to its intended application:

a) Mechanical strength;

b) Moisture-absorbent properties;

c) Combustibility;

d) Compatibility with dielectric mediums;

e) Dielectric strength;

f) Aging characteristics; and

g) Resistance to distortion at maximum temperatures to which the enclosure may be subjected under conditions of normal or abnormal use.

4.3.4 With regard to mechanical strength, aging characteristics, and resistance to distortion at maximum temperatures of operation described in 4.3.3 (a), (f) and (g), a polymeric material used as an enclosure shall have a relative mechanical temperature index without impact of at least 70°C (158°F) or the marked temperature rating, whichever is greater, in accordance with the Standard for Polymeric Materials – Long Term Property Evaluations, UL 746B. With regard to the moisture-absorbent and dielectric strength properties described in 4.3.3 (b) and (e), a polymeric material shall meet the requirements for dielectric strength as described in Table 6.1 of the Standard for Polymeric Materials – Use in Electrical Equipment Evaluations, UL 746C. The compatibility with dielectric mediums is addressed with the Dielectric Voltage-Withstand Test of Section 13.

4.3.5 A nonmetallic enclosure material that also functions as an insulator shall comply with Insulating Material, Section 6.

5 Internal Protection Bridge

5.1 A polymeric material used as an internal protection bridge or pressure interrupter shall have a relative mechanical temperature index without impact in accordance with the Standard for Polymeric Materials – Long Term Property Evaluations, UL 746B, at least equal to that of the capacitor enclosure. See 4.3.4.

6 Insulating Material

6.1 A material used for the mounting of uninsulated capacitor terminals shall be a material rated for the application, and shall comply with the requirements specified in Table 6.1.

AVA Documents
Document Sharing Hub

Full document details: UL 810 2023

Exception No. 1: A polymeric insulating material that is not rated for, or does not comply with, the hot wire ignition or high current arc resistance to ignition requirements in Table 6.1 shall not be used unless the part fabricated with the polymeric material complies with the applicable testing requirements outlined in the "additional consideration for materials not meeting pre-selection test performance levels" as prescribed in the Standard for Polymeric Materials – Use in Electrical Equipment Evaluations, UL 746C, Table 6.2.

Exception No. 2: Products that have a minimum 1/2-in (12.7-mm) over surface spacing from terminal-to-terminal are not required to comply with the polymeric insulating material requirements of Table 6.1.

Table 6.1
Polymeric insulating material

Application	Properties				
		Resistance to ignition		Electrical	
		Hot wire (HWI)[b]	High current (HAI)[b]	Dielectric breakdown strength[b]	Comparative tracking index (CTI)[b]
	Minimum flammability class[a]	Maximum performance level category	Maximum performance level category	Minimum volts, V	Maximum performance level category
Contact with insulated live parts[c]	V-0	4	3	–	–
	V-1	4	2		
	V-2	4	2		
Contact with uninsulated live parts[d]	V-0	4	3	5,000	5
	V-1	3	2	5,000	5
	V-2	2	2	5,000	5

[a] The flammability classification is to be determined by the tests described in the Standard for Tests for Flammability of Plastic Materials for Parts in Devices and Appliances, UL 94.

[b] Tests are to be conducted in accordance with the Standard for Polymeric Materials – Short Term Property Evaluation, UL 746A. Requirements for each test are specified in the Standard for Polymeric Materials – Use in Electrical Equipment Evaluations, UL 746C.

[c] Also applies to a nonmetallic enclosure in contact with insulated current-carrying live parts and where there are no uninsulated current carrying parts.

[d] Also applies to a nonmetallic enclosure in contact with uninsulated live parts or where the enclosure is within 1/32 in (0.8 mm) of uninsulated live parts.

6.2 Internal insulating materials shall comply with the requirements for the Dielectric Voltage-Withstand Test, Section 13. Internal insulating materials shall have a relative mechanical temperature index without impact of at least 70°C (158°F) or the marked temperature rating marked on the capacitor, whichever is greater, in accordance with the Standard for Polymeric Materials – Long Term Property Evaluations, UL 746B.

Exception: Internal insulating materials for capacitors not subjected to the Fault-Current Test, Section 12, shall comply with the following requirements:

a) Shall be classified HB minimum in accordance with the Standard for Tests Flammability of Plastic Material for Parts in Devices and Appliances, UL 94, or comply with the flammability – 12 mm flame test specified in the Standard for Polymeric Materials – Use in Electrical Equipment, UL 746C;

b) Shall have a relative mechanical temperature index without impact of at least 70°C (158°F) or the marked temperature rating marked on the capacitor, whichever is greater, in accordance with the Standard for Polymeric Materials – Long Term Property Evaluations, UL 746B; and

AVA Documents
Document Sharing Hub
Full document details: UL 810 2023

c) Shall comply with the requirements for dielectric strength criteria as described in Table 6.1 of the Standard for Polymeric Materials – Use in Electrical Equipment Evaluations, UL 746C.

6.3 A capacitor having a metal enclosure shall have an insulating liner of non-moisture-absorbent material between the capacitor roll and the metal enclosure. In addition, the capacitor shall resist the absorption of moisture by having the capacitor roll completely immersed in a sealing compound or other material that may be used for the purpose.

7 Leads, Terminals and Internal Wiring

7.1 A lead of a capacitor shall be rated for the voltage and current involved. The temperature rating of the insulation of the lead shall not be less than the temperature rating of the capacitor.

7.2 The connection of a lead inside a capacitor shall be secure. Strain relief shall be provided that complies with the Pull-Out Test, Section 9.

Exception: Bare leads provided for securing the capacitor to a printed wiring board need not comply with the Pull-Out Test of Section 9. Bare leads provided for this purpose shall comply with the material and minimum thickness requirements outlined in 7.5.

7.3 An integral terminal connector or terminal block employed for making electrical connections to a capacitor shall be mechanically secured to the capacitor to prevent movement that would result in reduced spacings and/or damage to connections. A terminal block shall be rated for the application and comply with the Standard for Terminal Blocks, UL 1059.

Exception: A terminal connector or terminal block may alternatively be evaluated to the requirements outlined in 7.4.

7.4 A terminal connector or terminal block shall comply with the following:

a) The insulation criteria for contact with uninsulated parts as outlined in Table 6.1;

b) The spacings criteria of Section 8;

c) The requirements of 7.5 and if intended for connection of copper wiring, be limited to copper, copper alloy or other suitable material found to prevent galvanic corrosion when in contact with the intended connection wiring (see Figure 7.1); and

d) The mold stress test of Section 11 and if provided with screw terminals, the torque test of Section SA5.3.

Documents
Document Sharing Hub

Full document details: UL 810 2023

Figure 7.1

Metal compatibility chart

	Magnesium, magnesium alloys	Zinc, zinc alloys	80 tin/20 Zn on steel, Zn on iron or steel	Aluminium	Cd on steel	Al/Mg alloy	Mild steel	Duralumin	Lead	Cr on steel, soft solder	Cr on Ni on steel, tin on steel, 12% Cr stainless steel	High Cr stainless steel	Copper, copper alloys	Silver solder, austenitic stainless steel	Ni on steel	Silver	Rh on Ag on Cu, silver/gold alloy	Carbon	Gold, platinum
Magnesium, magnesium alloys	0	0.05	0.55	0.7	0.8	0.85	0.9	1.0	1.05	1.1	1.15	1.25	1.35	1.4	1.45	1.6	1.65	1.7	1.75
Zinc, zinc alloys		0	0.05	0.2	0.3	0.35	0.4	0.5	0.55	0.6	0.65	0.75	0.85	0.9	0.95	1.1	1.15	1.2	1.25
80 tin/20 Zn on steel, Zn on iron or steel			0	0.15	0.25	0.3	0.35	0.45	0.5	0.55	0.6	0.7	0.8	0.85	0.9	1.05	1.1	1.15	1.2
Aluminium				0	0.1	0.15	0.2	0.3	0.35	0.4	0.45	0.55	0.65	0.7	0.75	0.9	0.95	1.0	1.05
Cd on steel					0	0.05	0.1	0.2	0.25	0.3	0.35	0.45	0.55	0.6	0.65	0.8	0.85	0.9	0.95
Al/Mg alloy						0	0.05	0.15	0.2	0.25	0.3	0.4	0.5	0.55	0.6	0.75	0.8	0.85	0.9
Mild steel							0	0.1	0.15	0.2	0.25	0.35	0.45	0.5	0.55	0.7	0.75	0.8	0.85
Duralumin								0	0.05	0.1	0.15	0.25	0.35	0.4	0.45	0.6	0.65	0.7	0.75
Lead									0	0.05	0.1	0.2	0.3	0.35	0.4	0.55	0.6	0.66	0.7
Cr on steel, soft solder										0	0.05	0.15	0.25	0.3	0.35	0.5	0.55	0.6	0.65
Cr on Ni on steel, tin on steel, 12% Cr stainless steel											0	0.1	0.2	0.25	0.3	0.45	0.5	0.55	0.6
High Cr stainless steel												0	0.1	0.15	0.2	0.35	0.4	0.45	0.5
Copper, copper alloys													0	0.05	0.1	0.25	0.3	0.35	0.4
Silver solder, austenitic stainless steel														0	0.05	0.2	0.25	0.3	0.35
Ni on steel															0	0.15	0.2	0.25	0.3
Silver																0	0.05	0.1	0.15
Rh on Ag on Cu, silver/gold alloy																	0	0.05	0.1
Carbon																		0	0.05
Gold, platinum																			0

Ag = Silver
Al = Aluminium
Cr = Chromium
Cd = Cadmium
Cu = Copper
Mg = Magnesium
Ni = Nickel
Rh = Rhodium
Zn = Zinc

NOTE. – Corrosion due to electrochemical action between dissimilar metals which are in contact is minimized if the combined electro–chemical potential is below about 0.6V. In the following table the combined electrochemical potentials are listed for a number of pairs of metals in common use; combinations above the dividing line should be avoided.

S3426E

Documents
Document Sharing Hub
Full document details: UL 810 2023

7.5 A wiring terminal of a capacitor shall be provided with a soldering lug, pressure terminal connector, wire-binding screw, or quick-connect terminal rated for securing the size of the conductor to be connected. The terminal material shall be at least 0.020-in (0.51-mm) thick and shall be of copper, copper alloy, tin plated steel, or other metal rated for the application. Wire-binding screws shall be limited to connections with 10 AWG (5.26 mm^2) or smaller conductors.

Exception: For capacitors rated over 5,000 V, a terminal plate tapped for a wire-binding screw shall be of metal not less than 0.030-in (0.76-mm) thick for a 14 AWG (2.1 mm^2) or smaller wire and not less than 0.050-in (1.27-mm) thick for a wire larger than 14 AWG (2.1 mm^2). There shall be sufficient threads to provide two full threads engagement with the screw.

7.6 A quick-connect terminal shall be provided with a detent, such as a dimple (depression) or hole in a tab that acts to engage a raised portion on the connector providing a latching means for the mating parts.

Exception: Capacitors employing terminal forks for securement of the capacitor to a printed wiring board are not required to be provided with a detent. The terminal fork shall comply with the material and minimum thickness requirements outlined in 7.5.

7.7 Insulated conductors serving as internal wiring and sleeving serving as insulation for uninsulated internal conductors shall be rated for the voltage, temperature, and other conditions of use to which they are subjected in the intended application and in accordance with the applicable component standard. See Section 1A for component requirements.

Exception: Insulated sleeving employed for internal conductors and/or connections molded from a thermoplastic material not previously evaluated in accordance with an applicable component standard as outlined in Section 1A may alternatively be evaluated to the Conductor Insulation Test of Section 10.

8 Spacings

8.1 The electrical spacing between an uninsulated live part, and an uninsulated live part of opposite polarity, or a grounded-metal part shall not be less than the applicable value specified in Table 8.1.

Exception No. 1: Electrical spacings are not specified for those parts that are inside the enclosure and that are surrounded by a dielectric medium. See 6.3.

Exception No. 2: As an alternative to the spacing requirements of Table 8.1, the spacing requirements in the Standard for Insulation Coordination Including Clearances and Creepage Distances For Electrical Equipment, UL 840, may be used. See Section 33.2 for details. In determining the pollution degree and overvoltage category, the end-use application is to be considered, and may require characteristics different than those indicated in 33.2.2 and 33.2.3.

Table 8.1
Spacings

Capacitor rating V	Minimum spacings			
	Through air		Over surface	
	in	(mm)	in	(mm)
0 – 150	1/8	(3.2)	1/4	(6.4)
151 – 300	1/4	(6.4)	3/8	(9.5)
301 – 660	3/8	(9.5)	1/2	(12.7)

Table 8.1 Continued on Next Page

Documents
Document Sharing Hub
Full document details: UL 810 2023

Table 8.1 Continued

Capacitor rating V	Minimum spacings			
	Through air		Over surface	
	in	(mm)	in	(mm)
661 – 2000	3/4	(19.1)	3/4	(19.1)
2001 – 5000	3/4	(19.1)	1	(25.4)
5001 – 7200	2	(50.8)	3-1/2	(88.9)

PERFORMANCE

9 Pull-Out Test

9.1 With reference to 7.2, the connection for a capacitor lead shall withstand the pull-out test described in 9.2 without any evidence of lead pull out.

9.2 Six samples of a capacitor are to be subjected to a gradual force applied to each lead for 1 min in a direction perpendicular to the plane of the surface at which the lead enters the capacitor. The force shall be:

a) 20 lbf (89 N) for 18 AWG (0.82 mm^2) and larger leads; or

b) 8 lbf (36 N) for leads smaller than 18 AWG (0.82 mm^2).

10 Conductor Insulation Test

10.1 Fifteen samples of the tubular style insulation employed in capacitors are to be conditioned in accordance with Table 10.1. The fifteen samples are to be 4-in (102-mm) diameter or square in the minimum thickness used or are to be of a size representative of the end-use and subjected to the following test outlined in 10.2 and 10.3.

10.2 Following the conditioning, each sample is to be subjected to a dielectric voltage within a test chamber. The electrodes of the dielectric equipment shall be placed on opposite sides and in the center of the sample. The voltage is to be applied at a uniform rate of 500 V/s until breakdown occurs. When physical evidence of dielectric breakdown is not apparent, the voltage is to be reapplied until a more positive indication is produced.

10.3 As a result of this test, the average breakdown value for each set of samples shall be no less than 5000 V. In addition, the average breakdown value for all 10 conditioned samples (subjected to either oven conditioning or moist air conditioning) shall be no less than one-half the value of the as-received samples. For example, when the as-received samples had a breakdown of 15000 V, then the conditioned samples shall not have a breakdown less than 7500 V.

Table 10.1
Conductor insulation conditioning

Number of Samples	Conditioning
5	As received
5	Oven exposure at 100 ±2°C (212 ±3.6°F) for 72 h, or the rated temperature of the capacitor, if rated higher than 100°C (212°F)
5	Exposure to moist air (90% ± 5% RH) at a temperature of 30 ±2°C (86 ±3.6°F) for 24 h

Documents
Document Sharing Hub
Full document details: UL 810 2023

11 Mold Stress Relief Test (Terminals Blocks/Terminal Connectors)

11.1 A terminal block and terminal connector evaluated in accordance with 7.4 shall be conditioned in an air-circulating oven for 7 h at a temperature of 10°C (18°F) plus the maximum rated temperature of the intended capacitor. At the conclusion of the conditioning, the terminal block shall be examined for damage such as cracking, warping or loosening of contacts.

11.2 As a result of the conditioning, there shall be no sign of damage to the terminal connection device such as cracking, warping or loosening of contacts.

12 Fault-Current Test

12.1 General

12.1.1 When tested under the induced fault conditions specified in this section:

a) For a capacitor with expansion type protection, the enclosure shall not vent, leak, or rupture expelling the dielectric medium; or

b) For a capacitor with segmented film type protection, there shall not be ignition of the cotton prescribed in 12.1.10.

12.1.2 Under test conditions the expansion of a capacitor with expansion type protection shall not exceed 0.5 in (12.7 mm) except that capacitors intended for power factor correction applications only can exceed the 0.5 in (12.7 mm) expansion limit if sufficient space can be provided in the end use application. Because of the large size of many power factor correction capacitors, additional expansion space may be necessary to allow for safe expansion as a result of overheating from an abnormal condition.

12.1.3 The manufacturer shall specify the maximum voltage and the maximum available fault current – excluding transients of the capacitor. See Table 12.1.

Table 12.1
Current for fault-current test

Intended application	Number of test samples (metallized electrode)[c]	Number of test samples (foil electrode)[a]	Current[b]								
			10,000 A	5,000 A	1,000 A	200 A	60 A	30 A	15 A	5 A	2.5 A
General application, and power factor correction applications, across-the-line or in series with other impedance	42 total	42 per fault 84 total	X	X	X	X	X	X		X	
Air conditioning or refrigeration and motor applications	30 total	30 per fault 60 total		X		X	X	X		X	
HID ballast, across-the-line applications	36 total	36 per fault 72 total		X	X	X	X		X	X	

Table 12.1 Continued on Next Page

Documents
Document Sharing Hub
Full document details: UL 810 2023

Table 12.1 Continued

Intended application	Number of test samples (metallized electrode)[c]	Number of test samples (foil electrode)[a]	Current[b]								
			10,000 A	5,000 A	1,000 A	200 A	60 A	30 A	15 A	5 A	2.5 A
HID ballast (secondary or extended primary) applications	24 total	24 per fault 48 total				X	X		X	X	
Fluorescent ballast, across-the-line applications	30 total	30 per fault 60 total			X	X	X			X	X
Fluorescent ballast, secondary applications	18 total	18 per fault 36 total					X			X	X

[a] Test samples for Type A and Type B faults specified in 12.2.1: three samples for each fault type and current with the capacitors having the maximum and minimum enclosure height and base size.

[b] Values of fault-test currents other than those specified may be used for specific conditions or applications.

[c] Three samples for each fault current with the capacitors having the maximum and minimum enclosure height and base size.

Note: The fault current test is intended to address protection of the capacitor from available fault currents over the life of the capacitor. The capacitor is intentionally internally faulted to represent dielectric breakdown that would occur within the capacitor over time. The maximum fault current test levels represent a complete internal dielectric breakdown in the capacitor with the maximum fault current available. The lower fault current test levels represent the various stages of internal dielectric breakdown during the life of the capacitor where the available fault current will be less.

12.1.4 The test-circuit voltage is to be the highest rated voltage of the circuit to which the capacitor is intended to be connected or the voltage across the capacitor, whichever is higher. The enclosure is to be connected to the live pole that is determined to be least likely to strike to ground in service. The open-circuit voltage of the test circuit is not to be less than 100% nor more than 105% of the rated voltage.

Exception: A voltage more than 105% of the rated voltage may be employed if agreeable to those concerned.

12.1.5 The test circuit power factor is to be the highest available for the circuit, unless a lower power factor is required for the intended application of the capacitor. The power factor is not specified when the available fault current is 1,000 A or more; however, the power factor of the circuit is to be recorded.

12.1.6 The test circuit is to have sufficient capacity to deliver the fault currents specified in Table 12.1 with the test terminals short-circuited with a copper bar that is not more than 12-in (305-mm) long and that has a cross-sectional area of at least 3 in^2 (19.4 cm^2).

12.1.7 A branch-circuit fuse is not to be employed in the test circuit as protection for a capacitor.

12.1.8 Representative production samples of the minimum and maximum enclosure sizes – minimum base size and minimum height, maximum base size and maximum height – are considered to represent the intermediate enclosure sizes. If one combination of base size and height of a capacitor represents another, only the representative capacitor need be tested. The number of samples to be employed in the test program is to be as specified in 12.2 and Table 12.1.

12.1.9 For capacitors with expansion type protection, the samples are to be filled with the oil that will be used in production and sealed. If use of an alternate dielectric medium is desired, the test program is to be

AVA Documents Document Sharing Hub

Full document details: UL 810 2023

repeated using the alternate medium. Each capacitor is to be marked or coded to indicate the type of fault and the type of medium.

12.1.10 For capacitors with segmented film type protection, the enclosure is to be wrapped in cotton.

12.2 Sample preparation

12.2.1 Capacitors with foil electrodes

12.2.1.1 The required number of samples, as indicated in Table 12.1, to complete each test are to be prepared. For paper and foil windings, an internal fault is to be induced by removal of a section of the paper dielectric between the foil layers at the top margin, to a depth of 1/2 in (12.7 mm) and a width of approximately 1/2 in (12.7 mm), at the following locations:

a) Type A – In a layer of the capacitor roll within fifteen layers from the outer end of the roll; and

b) Type B – In a layer of the roll within fifteen layers from the inner end of the roll or, at the manufacturer's option, a short circuit consisting of no paper between foils for the first 6 in (152 mm) of the roll.

Exception: Other methods of inducing internal faults that produce representative protector actuation are not prohibited from being used. Among these are contaminated dielectric, elevated ambient temperature, and increased test-circuit voltage.

12.2.2 Capacitors with metallized electrodes

12.2.2.1 A sufficient number of samples as indicated in Table 12.1 to complete each test is to be prepared. For capacitors with expansion type protection, the samples are to be internally faulted by applying a high-voltage DC potential with a current not more than 300 mA, sufficient to cause breakdown.

12.2.2.2 Prior to the test, the samples are to be conditioned for a minimum of 2 h in an oven at the rated temperature of the capacitor. If necessary, to defeat the rehealing of a capacitor (that is, self-clearing of a fault), a higher temperature may be used if agreeable to those concerned.

12.3 Test method

12.3.1 Capacitors with internal pressure interruption mechanisms

12.3.1.1 Three samples of each size with induced faults, prepared in accordance with 12.2.1 or 12.2.2 as applicable, are to be subjected to the rated maximum fault-test current, and to lower levels of fault-test currents specified in Table 12.1.

12.3.1.2 One sample is to be mounted in one of each of the following three positions:

a) With the major axis of the capacitor vertical and the terminals on top;

b) With the major axis of the capacitor horizontal and, when the capacitor is oval-shaped, with the minor axis of the oval horizontal; and

c) With major axis of the capacitor vertical and the terminals on the bottom.

12.3.1.3 When the protective device does not function at the lowest current level specified in Table 12.1, the current is to be increased by increments of 2.5 A. Quick-connect terminals are not prohibited from

AVA Documents
Document Sharing Hub
Full document details: UL 810 2023

being used in circuits in which the available fault current is 200 A or less. The enclosure is to be connected to the live pole of the capacitor that is least likely to strike to ground in service.

12.3.1.4 Leads connected to the test terminals are to be 12 AWG (3.3 mm^2) or larger, and are not to be longer than 2 ft (0.61 m).

12.3.1.5 The application of the voltage is to be continued for not less than 1 min after interruption of the fault current. If there has not been reestablishment of current or any indication of a tendency to restrike (unusual heating, internal arcing, or the like) before the end of the 1-min interval, the performance is acceptable. If evidence of a tendency to restrike has been noted, the voltage is to be applied until it is definitely determined that complete and permanent interruption of the circuit has occurred, or until the ultimate effect on the capacitor has been determined, but not longer than 2 h. Re-establishment of the circuit that results in venting or enclosure rupture is not acceptable.

12.3.1.6 If the protective device does not function after the circuit has been energized for at least 2 h, the sample may be replaced by a substitute sample of the same construction and fault condition, and the test is to be repeated.

12.3.1.7 At the conclusion of the test, the dielectric withstand test is conducted.

12.3.2 Capacitors with segmented metallized electrode protection (no internal pressure interruption mechanism)

12.3.2.1 Three samples of each size for each fault current, with induced faults prepared in accordance with 12.2.2, are subjected to the rated maximum fault-test current and to the lower levels of fault test currents specified in Table 12.1. See Table 12.1 for samples required. The test method shall consist of cycling the capacitors between a DC voltage used to break the capacitors down and the AC fault-test current. In order to cycle the samples, they are connected to a circuit as outlined in Figure 12.1.

12.3.2.2 A single cycle consists of:

a) The AC fault current at specified voltage is applied to the test sample capacitor(s) for 5 s.

b) The connection between the AC fault current circuit and test capacitor is then opened and the test capacitor is discharged for 30 to 60 s through a 3 MΩ resistor.

c) After the discharge, the test capacitor is connected to a DC voltage supply of 2,000 V (limited to 300 mA) for 2 s to induce an internal fault. This value may be adjusted if determination is made that the voltage levels are not adequately inducing internal faults.

d) The connection between the DC voltage supply and the test capacitor is then opened and the test capacitor is discharged for 30 to 60 s through a 3 MΩ resistor.

12.3.2.3 The above cycle shall be repeated until the test sample capacitance loss measures 5% of its original reading or ultimate results occurs.

12.3.2.4 When the protective mechanism does not function at the lowest current level specified in Table 12.1, the current is to be increased by increments of 2.5 A. Quick-connect terminals are not prohibited from being used in circuits in which the available fault current is 200 A or less. The enclosure is to be connected to the live pole of the capacitor that is least likely to strike to ground in service.

12.3.2.5 Leads connected to the test terminals are to be 12 AWG (3.3 mm^2) or larger, and are not to be longer than 2 ft (0.61 m).

12.3.2.6 At the conclusion of the test, the dielectric withstand test is conducted.

Documents
Document Sharing Hub
Full document details: UL 810 2023

Figure 12.1

Cycling test circuit for testing segmented metallized electrode type capacitors

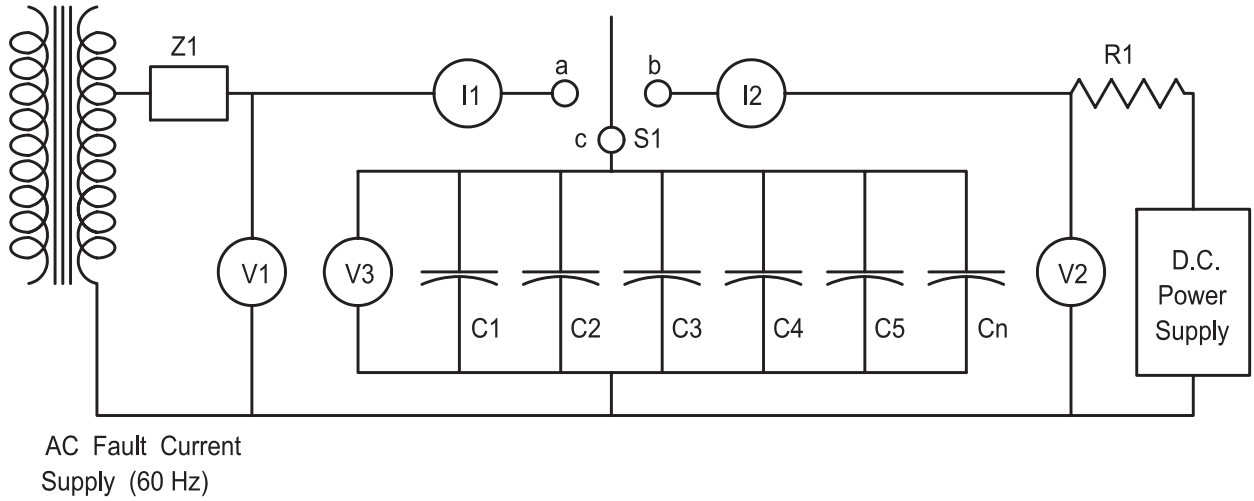

su1296

Current and voltage monitoring points:

V1 – open circuit voltage

I1 – AC test current

V2 – DC breakdown voltage

I2 – DC breakdown current

V3 – Capacitor voltage

Components for the circuit:

An AC supply capable of providing the required short circuit current or AFC and the required open circuit voltage or test voltage.

A small DC power supply capable of obtaining the desired breakdown voltage.

Z1 – The impedance added to the circuit impedance to achieve the desired fault current at the test voltage.

R1 – A resistor sized to limit the peak DC current to 1% of the normal peak current for the capacitors under test.

S1 – A switch where the "a" contact is capable of switching the AC fault current and the "b" contact is capable of switching the DC breakdown current.

C1 through Cn – The capacitors under test.

Documents
Document Sharing Hub
Full document details: UL 810 2023

12.4 Restrike test (expansion type protection only)

12.4.1 When tested as described in 12.4.2 there shall be no venting or rupture of the enclosure of a capacitor with expansion type protection.

12.4.2 One capacitor out of three (that is, one capacitor from each of the samples tested at each current level for each fault-current test) in which the protective device has actuated during the fault-current test is to be connected in a circuit of voltage equal to that of the fault-current test circuit, and positioned in the same manner as in the fault-current test for that sample. The samples chosen are to be those with the least amount of swelling, or those for which minor restrikes were noted during the fault-current test. This test is to be conducted for at least 48 h.

13 Dielectric Voltage-Withstand Test

13.1 All samples that have been subjected to the Fault-Current Test, Section 12, shall be subjected to a dielectric voltage-withstand test as described in 13.2. There shall be no dielectric breakdown of any sample.

Exception: Capacitors not subjected to the Fault-Current Test, Section 12, shall be subjected to an as-received dielectric voltage-withstand test between terminals and enclosure only as outlined in 13.4.

13.2 To determine if a capacitor complies with the requirements in 13.1, the capacitor is to be tested using a 500 VA or larger capacity transformer, the output voltage of which can be varied. The applied potential is to be increased from zero until the required test level is reached, and is to be held at that level for 1 min. The increase in applied potential is to be at a substantially uniform rate as rapid as is consistent with correct indication of its value by a voltmeter.

13.3 As an alternative, a DC potential equal to 1.4 times the AC potential specified in 13.4 may be used.

13.4 The test voltage applied shall consist of a 60 Hz alternating potential of 1,000 V plus twice the rated voltage applied between terminals and enclosure.

13.5 A capacitor with a nonmetallic enclosure is to be tested by applying the voltage between the terminals and a metal foil tightly wrapped around and contacting all surfaces other than the surface on which the terminals are attached.

MANUFACTURING AND PRODUCTION TESTS

14 Dielectric Voltage-Withstand Test

14.1 Each capacitor shall withstand without electrical breakdown, as a routine production-line test, the application of a 40 – 70 Hz potential between terminals and enclosure as specified in 13.4. As an alternative, a DC potential equal to 1.4 times the AC potential specified in 13.4 may be used.

Exception No. 1: The test potential application time may be reduced to 1 s if the test potential is 1,200 V plus 2.4 times the rated voltage.

Exception No. 2: This test is not necessary if the capacitor enclosure is made entirely of insulating material for capacitors.

14.2 The test equipment shall include a transformer having an essentially sinusoidal output, a means of indicating the test potential, an audible or visual indicator of electrical breakdown, and either a manually

AVA Documents
Document Sharing Hub
Full document details: UL 810 2023

reset device to restore the equipment after electrical breakdown or an automatic reject feature of any unacceptable capacitor.

14.3 If the output of the test equipment transformer is less than 500 VA, the equipment shall include a voltmeter in the output circuit to directly indicate the test potential.

14.4 If the transformer output is 500 VA or larger, the test potential may be indicated:

a) By a voltmeter in the primary circuit or in a tertiary-winding circuit;

b) By a selector switch marked to indicate the test potential; or

c) For equipment having a single test potential output, by a marking in a readily visible location to indicate the test potential.

14.5 If a marking is used without an indicating voltmeter as described in 14.4 (b) or (c), the equipment shall include a positive means, such as an indicator lamp, to indicate that the manually reset switch has been reset following a dielectric breakdown.

14.6 Test equipment other than those described in 14.2 – 14.5 may be used if equivalent.

MARKINGS

15 General

15.1 Each capacitor shall be legibly and permanently marked with:

a) The manufacturer's name, trade name, or trademark;

b) The date or other dating period of manufacture not exceeding any three consecutive months;

c) A distinctive catalog number or the equivalent;

d) The capacitance in microfarads and tolerance as a percentage;

e) The voltage rating;

f) The frequency in hertz;

g) The temperature rating when the capacitor is rated over 70°C (158°F); and

h) Capacitors complying with the fault current test of Section 12, shall be marked with the maximum fault current and the words "Internally Protected" or "Protected".

Exception No. 1: When the manufacturer's identification is provided in a traceable code, the product shall be identified by the brand or trademark owned by a private labeler.

Exception No. 2: When the date of manufacture is abbreviated or in a nationally accepted conventional code, or in a code affirmed by the manufacturer, the code:

a) Shall not repeat in less than 20 years; and

b) Shall not require reference to the production records of the manufacturer to determine when the product was manufactured.

Documents
Document Sharing Hub
Full document details: UL 810 2023

Exception No. 3: Capacitors not subjected to fault current testing per Section 12 shall not be marked as required in (h) above, nor shall any literature or packaging provided with the capacitors indicate that they have been evaluated for fault current protection in accordance with Section 12.

Exception No. 4: Capacitors intended for use in power factor correction units may be marked in KVAR rather than microfarads.

PART II – POWER-FACTOR CORRECTION UNITS

GENERAL

16 Terminology

16.1 The term "unit" as used in these requirements refers to all power-factor correction units or any part of a unit covered by these requirements unless specifically noted otherwise.

CONSTRUCTION

17 Frame and Enclosure

17.1 A unit shall be formed and assembled so that it will have the strength and rigidity necessary to resist the abuses to which it is likely to be subjected, without increasing the risk of fire, electric shock, or injury to persons due to total or partial collapse with a resulting reduction of spacings, loosening or displacement of parts, or other serious defects.

17.2 A unit shall be provided with an enclosure that houses all parts that may present a risk of fire, electric shock, or injury to persons under intended conditions of use.

17.3 A unit shall have a means for securely mounting it in position. Bolts, screws, and other parts used for mounting the unit shall be independent of those used for securing components.

17.4 Mounting instructions shall be furnished with each unit. If special hardware is required, it shall be provided by the manufacturer. A mounting means shall comply with Static Load Test, Section 46.

17.5 If the breakage or damage of a part such as an enclosure, a frame, a guard, or the like, might result in a risk of injury to persons, the material of the part shall have properties such that the part meets the demand of expected conditions of operation and use.

17.6 An enclosure, a frame, a guard, a handle, or the like shall not be sufficiently sharp to constitute a risk of injury to persons during normal maintenance or use.

Exception: This requirement does not apply to a sharp edge that might be exposed to enable the unit to perform its intended function.

17.7 If an electrical instrument, such as a meter, forms part of the enclosure, the face or the back of the instrument housing, or both together, shall comply with the requirements for an enclosure.

Exception: An electrical instrument connected in a secondary circuit need not comply, if damage or deterioration of the materials comprising the housing will not result in a risk of fire or electric shock.

17.8 Material supporting terminals or used as internal electrical insulation of an electrical instrument shall comply with Insulating Materials, Section 28.

Documents
Document Sharing Hub
Full document details: UL 810 2023