UL 82

STANDARD FOR SAFETY

Electric Gardening Appliances

Documents
Document Sharing Hub

Full document details: UL 82 2021

Documents
Document Sharing Hub

Full document details: UL 82 2021

UL Standard for Safety for Electric Gardening Appliances, UL 82

Ninth Edition, Dated August 31, 2017

Summary of Topics

This revision of ANSI/UL 82 dated May 14, 2021 is issued to clarify the application of test requirements to battery powered gardening appliances with respect to accessible parts and the mold stress test; SA2.2

Text that has been changed in any manner or impacted by UL's electronic publishing system is marked with a vertical line in the margin.

The revised requirements are substantially in accordance with Proposal(s) on this subject dated January 15, 2021 and March 12, 2021.

All rights reserved. No part of this publication may be reproduced, stored in a retrieval system, or transmitted in any form by any means, electronic, mechanical photocopying, recording, or otherwise without prior permission of UL.

UL provides this Standard "as is" without warranty of any kind, either expressed or implied, including but not limited to, the implied warranties of merchantability or fitness for any purpose.

In no event will UL be liable for any special, incidental, consequential, indirect or similar damages, including loss of profits, lost savings, loss of data, or any other damages arising out of the use of or the inability to use this Standard, even if UL or an authorized UL representative has been advised of the possibility of such damage. In no event shall UL's liability for any damage ever exceed the price paid for this Standard, regardless of the form of the claim.

Users of the electronic versions of UL's Standards for Safety agree to defend, indemnify, and hold UL harmless from and against any loss, expense, liability, damage, claim, or judgment (including reasonable attorney's fees) resulting from any error or deviation introduced while purchaser is storing an electronic Standard on the purchaser's computer system.

Documents
Document Sharing Hub

Full document details: UL 82 2021

No Text on This Page

Documents
Document Sharing Hub

Full document details: UL 82 2021

UL 82

Standard for Electric Gardening Appliances

First Edition – March, 1973
Second Edition – February, 1974
Third Edition – May, 1977
Fourth Edition – January, 1986
Fifth Edition – December, 1991
Sixth Edition – June, 1994
Seventh Edition – June, 2008
Eighth Edition – August, 2011

Ninth Edition

August 31, 2017

This ANSI/UL Standard for Safety consists of the Ninth Edition including revisions through May 14, 2021.

The most recent designation of ANSI/UL 82 as an American National Standard (ANSI) occurred on May 7, 2021. ANSI approval for a standard does not include the Cover Page, Transmittal Pages, and Title Page.

Comments or proposals for revisions on any part of the Standard may be submitted to UL at any time. Proposals should be submitted via a Proposal Request in UL's On-Line Collaborative Standards Development System (CSDS) at https://csds.ul.com.

UL's Standards for Safety are copyrighted by UL. Neither a printed nor electronic copy of a Standard should be altered in any way. All of UL's Standards and all copyrights, ownerships, and rights regarding those Standards shall remain the sole and exclusive property of UL.

COPYRIGHT © 2021 UNDERWRITERS LABORATORIES INC.

Documents
Document Sharing Hub

Full document details: UL 82 2021

No Text on This Page

Documents
Document Sharing Hub

Full document details: UL 82 2021

CONTENTS

PART 1 – ALL GARDENING APPLIANCES

INTRODUCTION

1 Scope 9
2 Units of Measurements 9
3 References 9
4 Glossary 15

CONSTRUCTION

5 Components 19
5.1 General 19
5.2 Attachment plugs, receptacles, connectors, and terminals 20
5.3 Batteries 21
5.4 Boxes and raceways 21
5.5 Capacitors and filters 21
5.6 Controls 21
5.7 Cords, cables, and internal wiring 22
5.8 Cord reels 23
5.9 Film-coated wire (magnet wire) 23
5.10 Gaskets, seals, and tubing 23
5.11 Ground-fault, arc-fault, and leakage current detectors / interrupters 23
5.12 Insulation systems 23
5.13 Light sources and associated components 24
5.14 Marking and labeling systems 24
5.15 Motors and motor overload protection 24
5.16 Motor overload protection 26
5.17 Overcurrent protection 26
5.18 Polymeric materials 27
5.19 Power supplies 27
5.20 Semiconductors and small electrical and electronic components 27
5.21 Supplemental insulation, insulating bushings, and assembly aids 27
5.22 Switches 28
5.23 Transformers 28
6 Frames and Enclosures 28
6.1 General 28
6.2 Metallic enclosures 29
7 Polymeric Enclosures 29
8 Handles 30
9 Accessibility of Moving Parts 31
10 Accessibility of Live Parts 32
10.1 General 32
10.2 Assembly screws 36
11 Mechanical Assembly 36
11.1 General 36
11.2 Appliances shipped partially disassembled 37
12 Protection Against Corrosion 38
13 Supply Connections 38
13.1 Power supply cord 38
13.2 Attachment plug 38
13.3 Strain relief 39

AVA Documents
Document Sharing Hub
Full document details: UL 82 2021

13.4 Bushings 39
14 Live Parts 39
15 Internal Wiring – Electrical Connections 40
15.1 General 40
15.2 Splices and connections 41
16 Electrical Insulation 41
17 Motors 42
17.1 General 42
17.2 Overtemperature protection 42
18 Switches and Controls 42
19 Lampholders 43
20 Capacitors 43
21 Printed-Wiring Boards 44
22 Spacings 44
23 Grounding 47
24 Rotating Parts 47
25 Controls – End Product Test Parameters 48
25.1 General 48
25.2 Auxiliary controls 48
25.3 Operating controls (regulating controls) 48
25.4 Protective controls (limiting controls) 49
25.5 Controls using a temperature sensing device 51

PERFORMANCE

26 General 51
27 Leakage Current Test 52
28 Starting Current Test 53
29 Continuity of Ground Connection Test 54
30 Input Test 54
31 Dielectric Voltage Withstand Test 54
32 Temperature Test 55
33 Humidity Conditioning Test 59
34 Water Spray Test 59
35 Abnormal Operation Tests 63
35.1 Component short- and open-circuit test 63
35.2 Capacitor overvoltage test 63
36 Handle Tests 63
37 Brush Cap Test 64
38 Attachment Plug Test 64
39 Strain Relief And Torque Tests 65
40 Cord Flexing Test 65
41 Pressure Pad Test 68
42 Switch and Control Tests 68
42.1 General 68
42.2 Reversing switch 69
42.3 Speed changing switch 69
43 Accelerated Aging Test 70
44 Polymeric Materials Not Classed HB 70
44.1 Mold stress relief test 70
44.2 Resistance to impact test – appliance 71
44.3 Resistance to impact – component 72
44.4 Abnormal operation test 73
44.5 Flame resistance test 74
45 Polymeric Materials Classed HB 74
45.1 Mold-stress evaluation and input test 74

Documents
Document Sharing Hub
Full document details: UL 82 2021

45.2 Resistance to impact test 74
45.3 Overload test 75
45.4 Physical properties of enclosure material tests 75
46 High Current Arc Ignition Test 75
47 Permanence of Marking Tests 76
47.1 General 76
47.2 Oven aging test 76
47.3 Immersion test 77
47.4 Standard atmosphere test 77

MANUFACTURING AND PRODUCTION TESTS

48 General 77
49 Production Line Dielectric Voltage Withstand Test 77
50 Production Line Grounding Continuity Test 78

RATING

51 General 79

MARKING

52 General 79
53 Cautionary 80
54 Instruction Manual 81
54.1 General 81
54.2 Important safety instructions 82

PART 2 – SPECIFIC APPLIANCES

GRASS SHEARS

55 Construction 87
56 Performance 88

LAWN TRIMMERS, EDGERS, AND EDGER-TRIMMERS

57 Construction 88
57.1 General 88
57.2 Guarding 88
57.3 Knife blade 90
57.4 Cutting blade position 90
57.5 Switches 90
57.6 Gauges 90
57.7 Support 91
57.8 Rotating members 91
57.9 Rotating Members Test – Adjustable Line Trimmers 91
58 Performance 92

CULTIVATORS

59 Construction 92
60 Performance 92

AVA Documents
Document Sharing Hub

Full document details: UL 82 2021

SHREDDERS, SHREDDER-BAGGERS, OR CHIPPERS

61 Construction 93
62 Performance 94
62.1 General 94
62.2 Structural integrity test 94
62.3 Thrown object test 94
62.4 Throwback test 96
62.5 Balance test 96

PRUNERS

63 Construction 96
64 Performance 97

POLE PRUNERS

65 Construction 97
66 Performance 98

PART 3 – DOUBLE-INSULATED APPLIANCES

GENERAL

67 Scope 99

CONSTRUCTION

68 Accessibility of Live Parts 99
69 Insulation 99
70 Supply Connections 100
70.1 Power supply cord 100
70.2 Strain relief 100
70.3 Bushing 101
71 Grounding 101
72 Internal Wiring 101
73 Capacitors 102
74 Brush Holders 102
75 Commutators and Armature End-Turns 103
76 Switches 103
77 Spacings 104

PERFORMANCE

78 Leakage Current Test 105
79 Insulation Resistance Test 105
80 Dielectric Voltage Withstand Test 106
81 Resistance to Impact Tests 107
81.1 General 107
81.2 Overall appliance 107
81.3 Switches, handles, and knobs 107
82 Resistance to Heat Test 108
83 Overload Test 108
83.1 General 108

AVA Documents
Document Sharing Hub
Full document details: UL 82 2021

83.2 Test terminated – appliance does not operate 113
83.3 Test terminated – appliance still operates 114
84 Armature Investigation 114

MARKING

85 Details 115

SUPPLEMENT SA – BATTERY POWERED GARDENING APPLIANCES

SA1 Scope 117
SA2 Performance and Construction 118
SA3 Brushcutter Blade Stopping Time after Long Term Cycling 123
SA4 Brushcutter Marking 123

Documents
Document Sharing Hub
Full document details: UL 82 2021

No Text on This Page

Documents
Document Sharing Hub

Full document details: UL 82 2021

PART 1 – ALL GARDENING APPLIANCES

INTRODUCTION

1 Scope

1.1 These requirements cover cord-connected, electrically-operated gardening appliances, such as cultivators, edger-trimmers, and the like, rated 250 volts or less for use in accordance the National Electrical Code, ANSI/NFPA 70.

1.2 These requirements also cover battery-operated gardening appliances covered in Battery Powered Gardening Appliances, Supplement SA of this Standard.

1.3 These requirements do not cover sprayers, foggers, or equipment for use in hazardous locations as defined in the National Electrical Code, ANSI/NFPA 70.

1.4 These requirements do not cover electrically operated walk-behind lawn mowers . These appliances are covered under UL 1447.

1.5 These requirements do not cover battery operated ride-on lawn mowers. These appliances are covered under UL 2753.

1.6 These requirements do not cover electrically operated hedge trimmers. These appliances are covered under UL 60745-2-15.

1.7 These requirements do not cover electrically operated log splitters.

2 Units of Measurements

2.1 Values stated without parentheses are the requirement. Values in parentheses are explanatory or approximate information.

2.2 Unless otherwise indicated, all voltage and current values specified in this Standard are root-mean-square.

3 References

3.1 Any undated reference to a code or standard appearing in the requirements in this standard shall be interpreted as referring to the latest edition of that code or standard.

ANSI Standards

ANSI B175.3
Internal Combustion Engine-Powered Hand-Held Grass Trimmers and Brushcutters – Safety and Environmental Requirements

ASTM Standards

ASTM E230/E23-0M
Specification and Temperature-Electromotive Force (emf) Tables for Standardized Thermocouples

ASTM D257
Test Methods for DC Resistance or Conductance of Insulating Materials

Documents
Document Sharing Hub
Full document details: UL 82 2021

IEC Standards

IEC 61000-4-5
Electromagnetic Compatibility (EMC) – Part 4-5: Testing and Measurement Techniques – Surge Immunity Test

ISO Standards

ISO 11684
Tractors, Machinery for Agriculture and Forestry, Powered Lawn and Garden Equipment – Safety Signs and Hazard Pictorials – General Principles

ISO 7010
Graphical Symbols – Safety Colours And Safety Signs – Registered Safety Signs

NFPA Standards

ANSI/NFPA 70
National Electrical Code

UL Standards

UL 20
General-Use Snap Switches

UL 44
Thermoset-Insulated Wires and Cables

UL 62
Flexible Cords and Cables

UL 66
Fixture Wire

UL 83
Thermoplastic-Insulated Wires and Cables

UL 94
Tests for Flammability of Plastic Materials for Parts in Devices and Appliances

UL 157
Gaskets and Seals

UL 224
Extruded Insulating Tubing

UL 244A
Solid-State Controls for Appliances

UL 248-1
Low-Voltage Fuses – Part 1: General Requirements

Documents
Document Sharing Hub

Full document details: UL 82 2021

UL 248-5
Low-Voltage Fuses – Part 5: Class G Fuses

UL 310
Electrical Quick-Connect Terminals

UL 355
Cord Reels

UL 486A-486B
Wiring Connectors

UL 486C
Splicing Wiring Connectors

UL 486E
Equipment Wiring Terminals for Use with Aluminum and/or Copper Conductors

UL 489
Molded-Case Circuit Breakers, Molded-Case Switches and Circuit-Breaker Enclosures

UL 489A
Circuit Breakers For Use in Communications Equipment

UL 496
Lampholders

UL 498
Attachment Plugs and Receptacles

UL 507
Electric Fans

UL 508
Industrial Control Equipment

UL 510
Polyvinyl Chloride, Polyethylene, and Rubber Insulating Tape

UL 514A
Metallic Outlet Boxes

UL 514C
Nonmetallic Outlet Boxes, Flush-Device Boxes and Covers

UL 514D
Cover Plates for Flush-Mounted Wiring Devices

UL 635
Insulating Bushings

UL 746A
Polymeric Materials – Short Term Property Evaluations

Documents
Document Sharing Hub

Full document details: UL 82 2021

UL 746B
Polymeric Materials – Long Term Property Evaluations

UL 746C
Polymeric Materials – Use in Electrical Equipment Evaluations

UL 746D
Polymeric Materials – Fabricated Parts

UL 758
Appliance Wiring Material

UL 773A
Nonindustrial Photoelectric Switches for Lighting Control

UL 796
Printed-Wiring Boards

UL 810
Capacitors

UL 817
Cord Sets and Power-Supply Cords

UL 873
Temperature-Indicating and -Regulating Equipment

UL 917
Clock-Operated Switches

UL 935
Fluorescent-Lamp Ballasts

UL 943
Ground-Fault Circuit-Interrupters

UL 943B
Appliance Leakage-Current Interrupters

UL 969
Marking and Labeling Systems

UL 991
Tests for Safety-Related Controls Employing Solid-State Devices

UL 1004-1
Rotating Electrical Machines – General Requirements

UL 1004-2
Impedance Protected Motors

UL 1004-3
Thermally Protected Motors

Documents
Document Sharing Hub
Full document details: UL 82 2021

UL 1004-7
Electronically Protected Motors

UL 1012
Power Units Other Than Class 2

UL 1029
High-Intensity Discharge Lamp Ballasts

UL 1053
Ground-Fault Sensing and Relaying Equipment

UL 1059
Terminal Blocks

UL 1077
Supplementary Protectors for Use in Electrical Equipment,

UL 1283
Electromagnetic Interference Filters

UL 1310
Class 2 Power Units

UL 1411
Transformers and Motor Transformers for Use in Audio-, Radio-, and Television-Type Appliances,

UL 1412
Fusing Resistors and Temperature-Limited Resistors for Radio- and Television-Type Appliances

UL 1434
Thermistor-Type Device

UL 1439
Tests for Sharpness of Edges on Equipment

UL 1441
Coated Electrical Sleeving

UL 1446
Systems of Insulating Materials – General

UL 1447
Electric Lawn Mowers

UL 1557
Electrically Isolated Semiconductor Devices

UL 1565
Positioning Devices

UL 1642
Lithium Batteries

Documents
Document Sharing Hub

Full document details: UL 82 2021

UL 1699
Arc-Fault Circuit-Interrupters

UL 1977
Component Connectors for Use in Data, Signal, Control and Power Applications

UL 1998
Software in Programmable Components

UL 2111
Overheating Protection for Motors

UL 2459
Insulated Multi-Pole Splicing Wire Connectors

UL 2595
General Requirements for Battery-Powered Appliances

UL 2753
Outline of Investigation for Battery Operated Ride-On Lawn Mowers

UL 4248-1
Fuseholders – Part 1: General Requirements

UL 4248-9
Fuseholders – Part 9: Class K

UL 5085-1
Low Voltage Transformers – Part 1: General Requirements

UL 5085-2
Low Voltage Transformers – Part 2: General Purpose Transformers

UL 5085-3
Low Voltage Transformers – Part 3: Class 2 and Class 3 Transformers

UL 8750
Light Emitting Diode (LED) Equipment for Use In Lighting Products

UL 60691
Thermal-Links – Requirements and Application Guide

UL 60730-1
Automatic Electrical Controls – Part 1: General Requirements

UL 60730-2-2
Automatic Electrical Controls for Household and Similar Use; Part 2 Particular Requirements for Thermal Motor Protectors

UL 60730-2-6
Automatic Electrical Controls for Household and Similar Use; Part 2: Particular Requirements for Automatic Electrical Pressure Sensing Controls Including Mechanical Requirements

Documents
Document Sharing Hub

Full document details: UL 82 2021

UL 60730-2-7
Automatic Electrical Controls for Household and Similar Use; Part 2: Particular Requirements for Timers and Time Switches

UL 60730-2-9
Automatic Electrical Controls for Household and Similar Use; Part 2: Particular Requirements for Temperature Sensing Controls

UL 60745-2-13
Hand-Held Motor-Operated Electric Tools – Safety – Part 2-13: Particular Requirements for Chain Saws

UL 60745-2-15
Hand-Held Motor-Operated Electric Tools – Safety – Part 2-15: Particular Requirements for Hedge Trimmers

UL 61058-1
Switches for Appliances – Part 1: General Requirements

UL 61800-5-1
Adjustable Speed Electrical Power Drive Systems – Part 5-1: Safety Requirements – Electrical, Thermal, and Energy

4 Glossary

4.1 For the purpose of this standard the following definitions apply.

4.2 ACCESSIBLE PART – A part so located that it can be contacted by a person, either directly or by means of a probe or tool, or that is not recessed the required distance behind an opening. See Accessibility of Moving Parts, Section 9.

4.3 APPLIANCE COUPLER – A single-outlet, female contact device for attachment to a flexible cord as part of a detachable power-supply cord to be connected to an appliance inlet (motor attachment plug).

4.4 APPLIANCE INLET (Motor Attachment Plug) – A male contact device mounted on an end product appliance to provide an integral blade configuration for the connection of an appliance coupler or cord connector.

4.5 APPLIANCE (FLATIRON) PLUG – An appliance coupler type of device having a cord guard and a slot configuration specified for use with heating or cooking appliances.

4.6 AUTOMATICALLY CONTROLLED PRODUCT – A product is determined to be automatically controlled if it complies with one or more of the following conditions:

a) The repeated starting of the product is independent of any manual control after one complete cycle of operation, after which some form of limit device opens the circuit;

b) During any single preset cycle of operation, the motor is caused to stop and restart;

c) When the product is energized, the initial starting of the motor may be intentionally delayed beyond intended, conventional starting; and

d) For a product employing a motor with a separate starting winding, during any single predetermined cycle of operation, automatic changing of the mechanical load reduces the motor speed sufficiently to reestablish starting-winding connections to the supply circuit.

Documents
Document Sharing Hub
Full document details: UL 82 2021

4.7 BASIC INSULATION – The insulation applied to live parts to provide basic protection against electric shock.

4.8 COMPONENT – A device or fabricated part of the appliance covered by the scope of a standard dedicated to the purpose. When incorporated in an appliance, equipment otherwise typically field installed (e.g. luminaire) is considered to be a component. Unless otherwise specified, materials that compose a device or fabricated part, such as thermoplastic or copper, are not considered components.

4.9 CONTROL, AUTOMATIC ACTION – A control in which at least one aspect is non-manual.

4.10 CONTROL, AUXILIARY – A device or assembly of devices that provides a functional utility, is not relied upon as an operational or protective control, and therefore is not relied upon for safety. For example, an efficiency control not relied upon to reduce the risk of electric shock, fire, or injury to persons during normal or abnormal operation of the end product is considered an auxiliary control.

4.11 CONTROL, MANUAL – A device that requires direct human interaction to activate or rest the control.

4.12 CONTROL, OPERATING – A device or assembly of devices, the operation of which starts or regulates the end product during normal operation. For example, a thermostat, the failure of which a thermal cutout/limiter or another layer of protection would mitigate the risk of electric shock, fire, or injury to persons, is considered an operating control. Operating controls are also referred to as “regulating controls”.

4.13 CONTROL, PROTECTIVE – A device or assembly of devices, the operation of which is intended to reduce the risk of electric shock, fire or injury to persons during normal and reasonably anticipated abnormal operation of the appliance. For example, a thermal cutout/limiter, or any other control/circuit relied upon for normal and abnormal conditions, is considered a protective control. Protective controls are also referred to as “limiting controls” and “safety controls”. During the evaluation of the protective control / circuit, the protective functions are verified under normal and single-fault conditions of the control.

4.14 CONTROL, TYPE 1 ACTION – The actuation of an automatic control for which the manufacturing deviation and the drift (tolerance before and after certain conditions) of its operating value, operating time, or operating sequence has not been declared and tested under this Standard.

4.15 CONTROL, TYPE 2 ACTION – The actuation of an automatic control for which the manufacturing deviation and the drift (tolerance before and after certain conditions) of its operating value, operating time, or operating sequence have been declared and tested under this Standard.

4.16 CORD CONNECTOR – A female contact device wired on flexible cord for use as an extension from an outlet to make a detachable electrical connection to an attachment plug or, as an appliance coupler, to an equipment inlet.

4.17 CUTTER AREA – The area through which the cutting means moves and in which a foreign object may be struck by the cutting means.

4.18 DEAD-MAN CONTROL – A control intended to automatically interrupt power when the actuating force supplied by the operator is removed.

4.19 DOUBLE INSULATION – An insulation system comprised of basic insulation and supplementary insulation, with the two insulations physically separated and so arranged that they are not simultaneously subjected to the same deteriorating influences, such as temperature, contaminants, and the like, to the same degree. See Figure 4.1.

Documents
Document Sharing Hub
Full document details: UL 82 2021

Figure 4.1

Example of double insulation

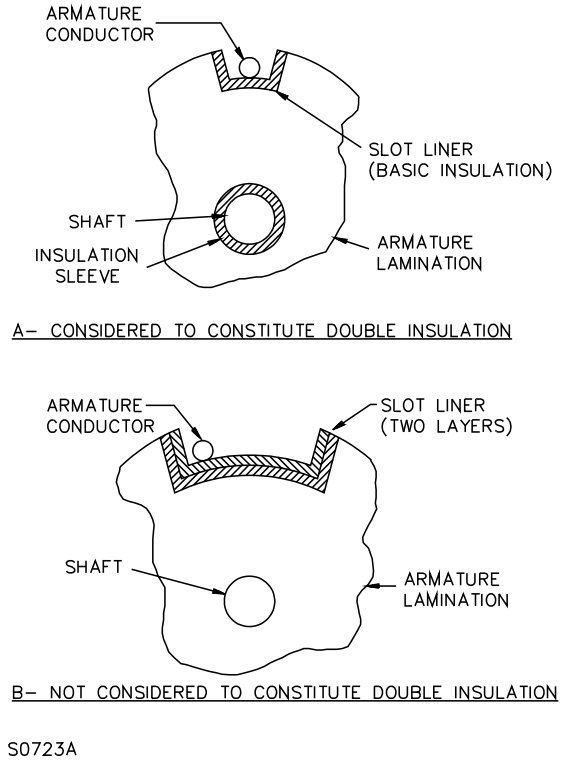

4.20 ENCLOSURE – That portion of an appliance that:

a) Renders all or any part that may otherwise present a risk of electric shock or injury to persons inaccessible; or

b) Prevents propagation of flame initiated by electrical disturbances occurring within the appliance.

4.21 FOOT PROBE – A simulated human foot. See Figure 4.2, for dimensional details.

Documents
Document Sharing Hub
Full document details: UL 82 2021

Figure 4.2

Foot probe

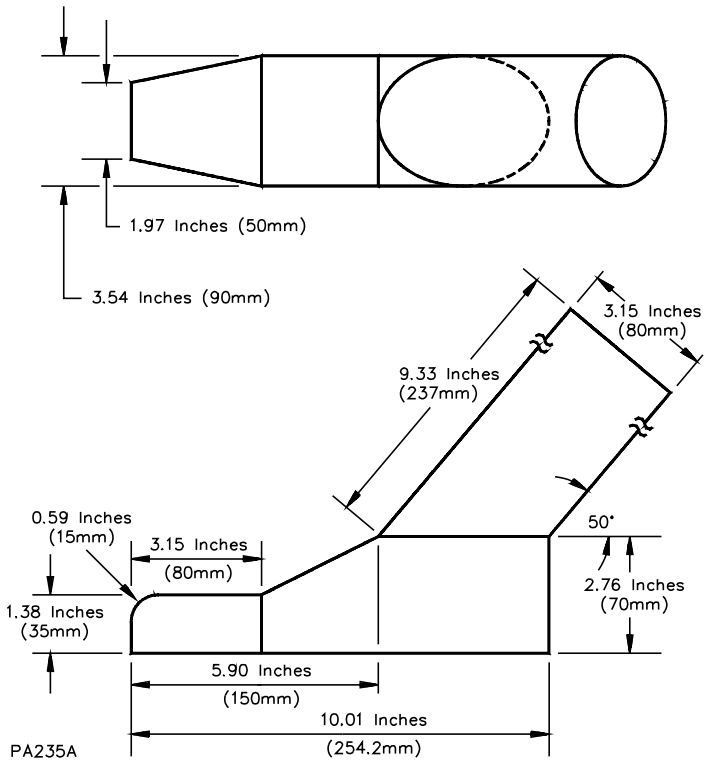

4.22 GROUND-SUPPORTED APPLIANCE – An appliance that, during normal operation, is supported entirely or in part by the ground.

4.23 GUARD – A part of an assembly provided for shielding parts that may present a risk of fire, electric shock, or injury to persons.

4.24 HAND-SUPPORTED APPLIANCE – An appliance that, during normal operation, must be completely supported by the user.

4.25 LEAKAGE CURRENT – All current or currents, including capacitively-coupled currents, that may be conveyed between exposed conductive surfaces of an appliance and ground or other exposed conductive surfaces of the appliance.

4.26 LIVE PART – A part energized with respect to earth or energized with respect to some other part.

4.27 OPERATOR CONTROL – Any device necessary for operating an appliance including a drive-engaging control, a movable-guide control, a drive-speed changing control, and a deflector control.

4.28 POLE PRUNER – hand supported pole-mounted appliance fitted with a saw chain cutting attachment mounted on a pole for pruning branches and having a bar not greater than 10.24 inch (260 mm).

4.29 PRUNERS – A hand-supported gardening appliance intended for one hand use and used primarily to cut off small twigs and branches of trees and shrubs.

Documents
Document Sharing Hub
Full document details: UL 82 2021

4.30 REINFORCED INSULATION – An improved basic insulation with such mechanical and electrical qualities that it, in itself, provides the same degree of protection against electric shock as double insulation. It may consist of one or more layers of insulating material.

4.31 SUPPLEMENTARY INSULATION – An independent insulation provided in addition to the basic insulation to protect against electric shock in case of mechanical rupture or electrical breakdown of the basic insulation. An enclosure of insulating material may form a part or the whole of the supplementary insulation.

CONSTRUCTION

5 Components

5.1 General

5.1.1 A component of a product covered by this Standard shall:

a) Comply with the requirements for that component as indicated in Sections 5.2 – 5.23;

b) Be used in accordance with its rating established for the intended conditions of use;

c) Be used within its established use limitations or conditions of acceptability; and

d) Not contain mercury.

Exception No. 1: A component of a product covered by this Standard is not required to comply with a specific component requirement that:

a) Involves a feature or characteristic not required in the application of the component in the product;

b) Is superseded by a requirement in this Standard; or

c) Is separately evaluated when forming part of another component, provided the component is used within its established ratings and limitations.

Exception No. 2: A component that complies with a UL component standard other than those specified in Sections 5.2 – 5.23, is acceptable if:

a) The component also complies with the applicable component standard specified in Sections 5.2 – 5.23; or

b) The component standard:

1) Is compatible with the ampacity and overcurrent protection requirements in ANSI/NFPA 70 where appropriate;

2) Considers long-term thermal properties of polymeric insulating materials in accordance with UL 746B; and

3) Any use limitations of the other component UL standards are identified and appropriately accommodated in the end use application. For example, a component used in a household application, but intended for industrial use and that complies with the relevant component standard may assume user expertise not common in household applications.

Documents
Document Sharing Hub
Full document details: UL 82 2021

5.1.2 A component that is also intended to perform other functions, such as over current protection, ground-fault circuit-interruption, surge suppression, any other similar functions, or any combination thereof, shall comply additionally with the requirements in the applicable UL standard that cover devices that provide those functions.

Exception: Where these other functions are not required for the application and not identified as part of markings, instructions, or packaging for the appliance, the additional component UL standard is not required to be applied.

5.1.3 A component not anticipated by the requirements in this Standard, not specifically covered by the component standards specified in Sections 5.2 – 5.23, and that involves a risk of electric shock, fire, or personal injury, shall be additionally evaluated in accordance with the applicable UL standard, and shall comply with 5.1.1 (b) – (d).

5.1.4 With regard to a component being additionally evaluated, reference to construction and performance requirements in another UL end product standard is appropriate where that standard anticipates normal and abnormal use conditions consistent with the application of the requirements in this standard.

5.2 Attachment plugs, receptacles, connectors, and terminals

5.2.1 Attachment plugs, receptacles, appliance couplers, appliance inlets (motor attachment plugs), and appliance (flatiron) plugs, shall comply with UL 498. See 5.2.9.

Exception No. 1: Attachment plugs and appliance couplers integral to cord sets or power supply cords are evaluated in accordance with UL 817, and is not required to comply with UL 498.

Exception No. 2: A fabricated pin terminal assembly is not required to comply with UL 498, if it complies with Live Parts, Section 14; Electric Insulation, Section 16; and Spacings, Section 22.

5.2.2 Quick-connect terminals, both connectors and tabs, for use with one or two 22 – 10 AWG copper conductors, having nominal widths of 0.110 in (2.8 mm), 0.125 in (3.2 mm), 0.187 in (4.8 mm), 0.205 in (5.2 mm), and 0.205 in (6.3 mm), intended for internal wiring connections in appliances, or for the field termination of conductors to appliance, shall comply with UL 310.

Exception: Other sizes of quick-connect terminals shall be evaluated with respect to crimp pull out, insertion-withdrawal, temperature rise, and all tests shall be conducted in accordance with UL 310.

5.2.3 Single and multi-pole connectors for use in data, signal, control and power applications within and between electrical equipment, and that are intended for factory assembly to copper or copper alloy conductors, or for factory assembly to printed-wiring boards, shall comply with UL 1977. See 5.2.9.

5.2.4 Wire connectors shall comply with UL 486A-486B.

5.2.5 Splicing wire connectors shall comply with UL 486C.

5.2.6 Multi-pole splicing wire connectors that are intended to facilitate the connection of hard-wired utilization equipment to the branch-circuit conductors of buildings shall comply with UL 2459. See 5.2.9.

5.2.7 Equipment wiring terminals for use with all alloys of copper, aluminum, or copper-clad aluminum conductors, shall comply with UL 486E.

5.2.8 Terminal blocks shall comply with UL 1059, and, if applicable, be suitably rated for field wiring.

AVA Documents
Document Sharing Hub
Full document details: UL 82 2021

Exception: A fabricated part performing the function of a terminal block is not required to comply with UL 1059 if the part complies with the requirements in Live Parts, Section 14; Electrical Insulation, Section 16; and Spacings, Section 22, of this end product Standard. This exception does not apply to protective conductor terminal blocks.

5.2.9 Female devices (such as receptacles, appliance couplers, and connectors) that are intended, or that may be used, to interrupt current in the end product, shall be suitably rated for current interruption of the specific type of load, when evaluated with its mating plug or connector. For example, an appliance coupler that can be used to interrupt the current of a motor load shall have a suitable horsepower rating when tested with its mating plug.

5.3 Batteries

5.3.1 Rechargeable lithium ion (Li-ion) cells shall comply with the requirements for secondary lithium cells specified in UL 1642.

5.4 Boxes and raceways

5.4.1 Electrical boxes and the associated bushings and fittings, and raceways, of the types specified in Wiring Methods and Materials, of the ANSI/NFPA 70, and that comply with the relevant UL standard (such as UL 514A; UL 514C; and UL 514D) and Components – General, Section 5.1, are considered to comply with the requirements in this Standard.

5.5 Capacitors and filters

5.5.1 The component requirements for a capacitor are not specified. A capacitor that complies with UL 810, is considered to comply with the requirements in 20.1.

5.5.2 Electromagnetic interference filters with integral enclosures that comply with UL 1283, are considered to comply with the requirements in 20.1.

5.6 Controls

5.6.1 General

5.6.1.1 Auxiliary controls shall be evaluated using the applicable requirements in this end product Standard and the requirements in Controls – End Product Test Parameters, Section 25.

5.6.1.2 Operating (regulating) controls shall be evaluated using the applicable component standard requirements specified in 5.6.2 – 5.6.7, and if applicable, the requirements in Controls – End Product Test Parameters, Section 25, unless otherwise specified in this end product Standard.

5.6.1.3 Operating controls that rely upon software for the normal operation of the end product where deviation or drift of the control may result in a hazard, such as a speed control unexpectedly changing its output, shall comply with UL 991 and UL 1998, or UL 60730-1, or both.

5.6.1.4 Protective (limiting) controls shall be evaluated using the applicable component standard requirements specified in Sections 5.6.2 – 5.6.7, and if applicable, the parameters in Controls – End Product Test Parameters, Section 25, unless otherwise specified in this end product Standard.

5.6.1.5 Solid-state protective controls that do not rely upon software as a protective component shall comply with UL 991 or UL 60730-1 (except for the Controls Using Software requirements in Annex H), or both

Documents
Document Sharing Hub
Full document details: UL 82 2021

5.6.1.6 Protective controls that rely upon software as a protective component shall comply with UL 991 and UL 1998, or UL 60730-1, or both.

5.6.1.7 An electronic, non-protective control that is simple in design need only be subjected to the applicable requirements in this end product Standard. A control that does not include an integrated circuit or microprocessor, but does consist of a discrete switching device, capacitors, transistors, or resistors, is considered simple in design. See Abnormal Operation Tests, Section 35.

5.6.2 Electromechanical and electronic controls

5.6.2.1 A control, other than as specified in Sections 5.6.2 – 5.6.7, shall comply with UL 244A, UL 873, or UL 60730-1.

5.6.3 Liquid level controls

5.6.3.1 A liquid level control shall comply with UL 244A, UL 873, UL 508, or UL 60730-1 and UL 60730-2-15.

5.6.4 Motor and speed controls

5.6.4.1 A control used to start, stop, regulate or control the speed of a motor shall comply with UL 244A, UL 873, UL 508, UL 61800-5-1, or UL 60730-1.

5.6.5 Pressure controls

5.6.5.1 A pressure control shall comply with UL 873, UL 508, or UL 60730-1 and UL 60730-2-6.

5.6.6 Temperature controls

5.6.6.1 A temperature control shall comply with UL 244A, UL 873, UL 61800-5-1, or UL 60730-1 and UL 60730-2-9.

5.6.6.2 A temperature positive temperature coefficient (PTC) or a negative temperature coefficient (NTC) thermistor, that performs the same function as an operating or protective control shall comply with UL 1434.

5.6.6.3 A thermal cutoff shall comply with UL 60691.

5.6.7 Timer controls

5.6.7.1 A timer control shall comply with UL 244A or UL 60730-1 and UL 60730-2-7.

5.7 Cords, cables, and internal wiring

5.7.1 A cord set or power supply cord shall comply with UL 817.

5.7.2 Flexible cords and cables shall comply with UL 62. Flexible cord and cables are considered to comply with this requirement when preassembled in a cord set or power supply cord that complies with UL 817.

5.7.3 Internal wiring composed of insulated conductors shall comply with UL 758.

Documents
Document Sharing Hub
Full document details: UL 82 2021

Exception No. 1: Insulated conductors is not required to comply with UL 758, if they comply with UL 44, UL 83 or UL 66 or if they comply with the applicable UL standard for other insulated conductor types specified in Wiring Methods and Materials, of the ANSI/NFPA 70.

Exception No. 2: Insulated conductors for specialty applications (e.g. data processing or communications) and located in a low-voltage circuit not involving the risk of fire or injury to persons are not required to comply with UL 758.

5.8 Cord reels

5.8.1 A cord reel shall comply with special use cord reel requirements in UL 355.

5.9 Film-coated wire (magnet wire)

5.9.1 The component requirements for film coated wire and Class 105 (A) insulation systems are not specified.

5.9.2 Film-coated wire in intimate combination with one or more insulators, and incorporated in an insulation system rated Class 120 (E) or higher, shall comply with the magnet wire requirements in UL 1446.

5.10 Gaskets, seals, and tubing

5.10.1 Gaskets, o-rings, seals, and tubing the failure of which would increase the risk of fire, electric shock, injury to persons, or personal injury shall comply with UL 157.

5.11 Ground-fault, arc-fault, and leakage current detectors / interrupters

5.11.1 Ground-fault circuit-interrupters (GFCI) for protection against electrical shock shall comply with UL 943. The following statement, or equivalent, shall be included as a marking near the GFCI, or as an instruction in the manual: " Press the TEST button (then RESET button) every month to assure proper operation."

5.11.2 Appliance-leakage-current interrupters (ALCI) for protection against electrical shock shall comply with UL 943B. An ALCI is not considered an acceptable substitute for a GFCI when ANSI/NFPA 70 requires a GFCI.

5.11.3 Equipment ground-fault protective devices shall comply with UL 1053, and the applicable requirements in UL 943.

5.11.4 Arc-fault circuit-interrupters (AFCI) shall comply with UL 1699.

5.11.5 Leakage-current detector-interrupters (LCDI) and any shielded cord between the LCDI and appliance shall comply with UL 1699.

5.12 Insulation systems

5.12.1 Materials used in an insulation system that operates above Class 105 (A) temperatures shall comply with UL 1446.

5.12.2 All insulation systems employing integral ground insulation shall comply with the requirements specified in UL 1446.

AVA Documents
Document Sharing Hub

Full document details: UL 82 2021

5.13 Light sources and associated components

5.13.1 Lampholders and indicating lamps shall comply with UL 496.

Exception: Lampholders forming part of a luminaire that complies with the applicable UL luminaire standard are considered to comply with this requirement.

5.13.2 Lighting ballasts shall comply with UL 935 or UL 1029.

Exception No. 1: Ballasts forming part of a luminaire that complies with the applicable UL luminaire standard are considered to comply with this requirement.

Exception No. 2: Ballasts for other light sources shall comply with the appropriate UL standard.

5.13.3 Light emitting diode (LED) light sources shall comply with UL 8750.

Exception No. 1: LED light sources forming part of a luminaire that complies with an appropriate UL luminaire standard are considered to comply with this requirement.

Exception No. 2: Individual LED light sources mounted on printed-wiring boards and intended for indicating purposes is not required to comply with UL 8750, but shall comply with the applicable requirements in this end product Standard.

5.14 Marking and labeling systems

5.14.1 A marking and labeling system shall comply with UL 969.

5.15 Motors and motor overload protection

5.15.1 General

5.15.1.1 General-purpose type motors having a NEMA frame size shall comply with the requirements specified in General-Purpose Type Motors, Section 5.15.2. This includes fractional HP motors rated up to 1 HP (typically NEMA frame sizes 42, 48, or 56), and integral HP motors rated 1 HP and greater (typically NEMA frame sizes 140 – 449T).

5.15.1.2 Motors not enclosed, or partially enclosed, by the end product enclosure shall comply with the requirements specified in General-Purpose Type Motors, Section 5.15.2.

5.15.1.3 Component type motors completely enclosed within the end product enclosure shall comply with the requirements specified in General-Purpose Type Motors, Section 5.15.2 or in or Component Type Motors, Section 5.15.3.

5.15.1.4 Motors located in a low voltage circuit are evaluated for the risk of fire and personal injury in accordance with the applicable requirements in this end product Standard.

5.15.1.5 Low voltage component fans that comply with UL 507, are considered to comply with the requirements in Motors, Section 17.

5.15.2 General-purpose type motors

5.15.2.1 A general-purpose type motor shall comply with UL 1004-1.

Documents
Document Sharing Hub
Full document details: UL 82 2021

5.15.3 Component type motors

5.15.3.1 Component type motors shall comply with either 5.15.3.2 or 5.15.3.3.

5.15.3.2 The motor shall comply with UL 1004-1 except as noted in Table 5.1:

Table 5.1
Superseded requirements

UL 1004-1 exempted requirements	Superseded by UL 82 requirements
Current and Horsepower Relation, Section 6	31.3
Cord-Connected Motors, Section 15	Supply Connections, Section 13
Factory Wiring Terminals and Leads, Section 17	Internal Wiring – Electrical Connections, Section 15
Electrical Insulation, Section 22	Electrical Insulation, Section 16
Non-Metallic Functional Parts, Section 28	Frames and Enclosures, Sections 6 Polymeric Enclosures, Section 7 Polymeric Materials Not Classed HB, Section 44 Polymeric Materials Classed HB, Section 45 High Current Arc Ignition Test, Section 46
Solid-State Controls, 7.2	Controls, Section 5.6
Non-metallic enclosure thermal aging, 9.1.4	Motors and Motor Overload Protection, 5.15
Motor enclosure, 9.2 – 9.4	Frames and Enclosures, Section 6
Grounding, Section 10 and Grounding Identification, Section 11	Grounding, Section 23
Ventilation Openings, Section 12: only applicable where the openings are on surfaces considered to be the appliance enclosure.	Frames and Enclosures, Section 6
Accessibility of Uninsulated Live Parts, Film-Coated Wire, and Moving Parts, Section 13	Accessibility of Live Parts, Section 10
Protection Against Corrosion, Section 14	Protection Against Corrosion, Section 12
Available fault current ratings for motor start and running capacitors, 26.6: not applicable for cord and plug connected appliances.	Capacitors, Section 20
Switch, Section 27 is not applicable to centrifugal starting switches	Switch and Control Test, Section 42
With the exception of Resilient Elastomer Mounting Test, Section 36 and Electrolytic Capacitor Tests, Section 41, the performance tests of UL 1004-1 are not applicable	All applicable performance tests
Only the following marking requirements specified in 44.1 of UL 1004-1 are applicable: manufacturer's name or identification; rated voltage; rated frequency; number of phases if greater than 1; and multi-speed motors, other than a shaded-pole or a permanent-split-capacitor motor, shall be marked with the amperes and horsepower at each speed	52.2

5.15.3.3 The motor shall comply with the applicable component requirements in Components – General, Section 5.1, the following construction requirements, and the applicable performance requirements (when tested in conjunction with the end product), of this end product Standard:

a) Protection Against Corrosion, Section 12;

b) Internal Wiring – Electrical Connections, Section 15;

c) Electrical Insulation, Section 16;

Documents
Document Sharing Hub
Full document details: UL 82 2021

d) Motors, Section 17;

e) Capacitors, Section 20;

f) Spacings, Section 22; and

g) Grounding, Section 23.

5.16 Motor overload protection

5.16.1 Thermal protection devices integral with the motor shall comply with UL 2111, UL 1004-3, or UL 60730-1 and UL 60730-2-2, in conjunction with UL 1004-3 (to evaluate the motor-protector combination).

5.16.2 Impedance protection shall comply with UL 2111 or UL 1004-2.

5.16.3 Electronic protection integral to the motor shall comply with the UL 1004-7.

5.16.4 Except as indicated in 5.16.3, electronically protected motor circuits shall comply with one of the following. See 5.6.4, for basic control requirements.

a) The UL 991. When the protective electronic circuit is relying upon software as a protective component, it shall comply with the requirements in the UL 1998. If software is relied upon to perform a safety function, it shall be considered software Class 1;

b) UL 60730-1; If software is relied upon to perform a safety function, it shall be considered software Class B; or

c) The UL 61800-5-1.

Exception: Compliance with the above standards is not required for an electronically protected motor circuit if there is no risk of fire, electric shock, or casualty hazard during abnormal testing with the motor electronic circuit rendered ineffective; compliance with the applicable requirements of this end product Standard is then required.

5.17 Overcurrent protection

5.17.1 Fuses shall comply with UL 248-1; and the applicable UL 248 part standard (e. g. UL 248-5). Defined use fuses that comply with UL 248-1 and another applicable UL standard for fuses are considered to comply with this requirement.

5.17.2 Fuseholders shall comply with UL 4248-1, and the applicable part standard (e.g. UL 4248-9).

5.17.3 Circuit breakers shall comply with UL 489.

Exception: Circuit breakers used in telecommunications circuitry that comply with UL 489A, is not required to comply with UL 489.

5.17.4 Circuit breakers having integral ground fault circuit interrupter capability for protection against electrical shock shall additionally comply with UL 943.

5.17.5 Supplementary protectors shall comply with UL 1077.

5.17.6 Fusing resistors shall comply with UL 1412.

Documents
Document Sharing Hub

Full document details: UL 82 2021

5.18 Polymeric materials

5.18.1 Polymeric enclosure materials or a polymeric device which provides mechanical support or electrical insulation or separation whose deterioration would reduce spacings between uninsulated live parts or could result in a risk of fire, electric shock, or risk of injury to persons shall comply with UL 746A, UL 746B, UL 746C, unless superseded by the requirements in this Standard. Polymeric materials molded or fabricated by a source other than the manufacturer, shall be identified according to UL 746D.

5.18.2 Metallized or painted polymeric parts or enclosures shall comply with the applicable requirements in UL 746C. This requirement is not applicable to exterior surfaces of polymeric enclosure materials or parts if the metallized coating or paint does not offer a continuous path for an internal flame to propagate externally.

5.19 Power supplies

5.19.1 A Class 2 power supply shall comply with UL 1310.

5.19.2 A non-Class 2 power supply shall comply with UL 1012.

5.20 Semiconductors and small electrical and electronic components

5.20.1 A power switching semiconductor device that is relied upon to provide isolation to ground shall comply with UL 1557.

5.20.2 An optical isolator that is relied upon to provide isolation between primary and secondary circuits or between other circuits as required by this end product Standard shall comply with UL 1577.

5.20.3 Except as otherwise specified in this Standard, component requirements are not specified for small electrical parts on printed-wiring boards, including diodes, transistors, resistors, inductors, integrated circuits, and capacitors not directly connected to the supply source.

5.20.4 Where an electronic component is determined to be a critical component during the testing Abnormal Operation Test, Section 35, the circuit shall comply with UL 991, including its Follow-Up Program; and as applicable, UL 1998 for controls that rely upon software as a protective component, UL 60730-1, or both. See Protective Controls (Limiting Controls), Section 25.4 for the test parameters to be used.

5.20.5 A critical component is a component that performs one or more safety-related functions where its failure results in a condition, such as the risk of fire, electric shock, or injury to persons, in the end product application.

5.20.6 A critical component may also be identified using a Failure-Mode and Effect Analysis (FMEA) in accordance with the Failure-Mode and Effect Analysis (FMEA), requirements in UL 991.

5.20.7 Portions of a circuit comprised of a microcontroller or other programmable device that performs a back-up, limiting, or other safety function intended to reduce the risk of fire, electric shock, or injury to persons shall comply with Controls Using Software requirements in UL 60730-1.

5.21 Supplemental insulation, insulating bushings, and assembly aids

5.21.1 The requirements for supplemental insulation (e. g. tape, sleeving or tubing) are not specified unless the insulation or device is required to comply with a performance requirement of this Standard. In such cases, the insulation or device shall comply with the following applicable standards:

Documents
Document Sharing Hub
Full document details: UL 82 2021

a) Insulating tape shall comply with UL 510;

b) Sleeving shall comply with UL 1441; or

c) Tubing shall comply with UL 224.

5.21.2 Wire positioning devices required to comply with the requirements in this Standard shall comply with UL 1565.

5.21.3 Insulating bushings shall comply with UL 635, and be suitable for the application with respect to the hole size and shape, maximum use temperature and wire size or type. To determine if the hole size and shape is suitable for the bushing, the applicable test specified in this Standard (e.g. Strain Relief Test, Section 13.3, Push-Back Relief Test, Paragraph 13.3.3, Mold Stress Relief Test, Section 44.1) shall be conducted.

5.22 Switches

5.22.1 Switches shall comply with UL 20, UL 773A, or UL 61058-1, as applicable:

Exception: Switching devices that comply with the applicable UL standards for specialty applications (e.g. transfer switch equipment), industrial use (e.g. contactors, relays, auxiliary devices), or are integral to another component (e.g. switched lampholder) is not required to comply with this requirement.

5.22.2 Clock-operated switches, and time switches, including timers, shall comply with UL 917 or UL 60730-1 and UL 60730-2-7.

5.22.3 A timer or time switch, incorporating electronic timing circuits or switching circuits, with or without separable contacts, that functions as a protective control, shall comply with the requirements for a protective control. See 5.6.1.4.

5.23 Transformers

5.23.1 General-purpose transformers shall comply with UL 5085-1 and UL 5085-2.

Exception: A transformer that complies with UL 1411, and that is used in a circuit involving an audio or video component complies with the intent of this requirement.

5.23.2 Class 2 and Class 3 transformers shall comply with UL 5085-1; and UL 5085-3.

Exception: Transformers located in a low voltage circuit, and that do not involve a risk of fire, electric shock, or injury to persons is not required to comply with this requirement.

6 Frames and Enclosures

6.1 General

6.1.1 The frame and enclosure of an appliance shall have the strength and rigidity necessary to resist the abuses to which it is likely to be subjected during normal service without total or partial collapse resulting in a risk of fire, electric shock, or injury to persons due to reduction of spacings, loosening or displacement of parts, and other serious defects.

6.1.2 Among the factors taken into consideration when judging the acceptability of a frame or enclosure are its:

Documents
Document Sharing Hub
Full document details: UL 82 2021

a) Mechanical strength;

b) Resistance to impact;

c) Moisture-absorptive properties;

d) Combustibility and resistance to ignition from electrical sources;

e) Resistance to corrosion;

f) Resistance to distortion at temperatures to which the enclosure may be subjected under conditions of normal or abnormal use; and

g) Dielectric properties, insulation resistance, and resistance to arc tracking. A material that will be exposed to oil, acids, solvents, reagents, cleaning agents, or ozone as part of the use or application of the appliance shall not be adversely affected by these environments, as determined by tests.

6.2 Metallic enclosures

6.2.1 The thickness of cast- and sheet-metal portions of an enclosure shall not be less than the applicable value specified in Table 6.1.

Exception: The specifications in Table 6.1, do not apply to an enclosure determined to be acceptable when evaluated under the considerations specified in 6.1.2.

Table 6.1
Thickness of metal enclosure

Metal	Minimum thickness			
	At small, flat, unreinforced surfaces and at surfaces that are reinforced by curving, ribbing, or the like		At relatively large unreinforced, flat surfaces	
	Inch	(mm)	Inch	(mm)
Die-cast metal	3/64	(1.2)	5/64	(2.0)
Cast malleable iron	1/16	(1.6)	3/32	(2.4)
Other cast metal	3/32	(2.4)	1/8	(3.2)
Uncoated sheet steel	0.026	(0.66)	0.026	(0.66)
Galvanized sheet steel	0.029	(0.74)	0.029	(0.74)
Nonferrous sheet metal	0.036	(0.91)	0.036	(0.91)

6.2.2 The material used as the enclosure shall be acceptable for use at the maximum temperature to which it is exposed in normal use. Material exposed to temperatures in excess of 80°C (176°F) shall be evaluated with respect to aging to determine whether it is acceptable for the purpose. See 7.1.

7 Polymeric Enclosures

7.1 An enclosure formed of polymeric material shall either:

a) Comply with the requirements for Polymeric Materials Not Classed HB, Section 44; or

b) Be classed HB in accordance with UL 94, and comply with the requirements for Polymeric Materials Classed HB, Section 45, and if applicable, with the requirements for High-Current Arc Ignition Test, Section 46.

AVA Documents
Document Sharing Hub
Full document details: UL 82 2021

Exception No. 1: An enclosure formed of polymeric material classed HB or less flammable is acceptable without further test provided the appliance complies with all of the following:

a) All live parts within the enclosure are acceptably insulated or have acceptable internal enclosures independent of the outer polymeric enclosure;

b) All leads connecting components inside the enclosure are mechanically secured so that displacement of any component resulting from degradation of the polymeric material will not cause a stress on the junction between a lead and a terminal of the component. A component having integral leads is to be subjected to strain relief tests if such tests are not otherwise a part of the required test procedure for the component; and

c) The power supply cord strain relief does not depend upon the enclosure.

Exception No. 2: An enclosure formed of polymeric material classed HB that complies with all of the requirements for Polymeric Materials not Classed HB, Section 44, except those for the flame resistance test described in 44.4.1 – 44.4.4, is acceptable provided all live parts within the enclosure are acceptably insulated or have acceptable internal enclosures independent of the outer polymeric enclosure.

Exception No. 3: An enclosure formed of material classed V-2 or less flammable is not required to be subjected to the flame resistance test described in 44.4.1 – 44.4.4, if the thickness of the enclosure is not less than the minimum thickness for which the material was classed.

8 Handles

8.1 An appliance shall have a handle or handles that permit grasping the appliance with both hands.

Exception: An appliance that is manipulated with one hand, such as grass shears and pruners, may have only one handle.

8.2 Other than as noted in 8.4, the handles or surfaces most likely to be grasped by the user during the normal operation of an appliance shall be made of or covered with an insulating material that complies with the requirements in 8.5, the Handle Tests, Section 36, and the Dielectric Voltage Withstand Test, Section 80 and entry 2 of Table 80.1.

8.3 With reference to 8.2, examples of surfaces that are likely to be grasped by the user during normal operation include a lever, handle, or button for a switch or other operator control. Surfaces of a guard for a switch or other operator control are also included if located where likely to be grasped.

8.4 The outer surfaces of a handle or other area likely to be grasped during normal operation shall not be of electrically conductive material, unless:

a) Insulation that complies with Dielectric Voltage Withstand Test, Section 80 and entry 2 of Table 80.1, is interposed between the surfaces likely to be grasped and:

1) The cutting member; and

2) Any metallic guard for the cutting member; and

b) Surfaces likely to be grasped:

1) Are double-insulated from live parts; or

2) Do not enclose electrical components and are separated from all dead metal parts that enclose electrical components by insulation that complies with Dielectric Voltage Withstand Test, Section 80 and entry 2 of Table 80.1.

AVA Documents
Document Sharing Hub
Full document details: UL 82 2021

8.5 The insulating material specified in 8.2, shall be of a type and thickness that make it acceptable as the sole insulation between a live part and a dead metal part. If it overlies and is in intimate contact with dead metal, the insulating material shall not be less than 5/64 inch (2.0 mm) thick.

Exception: The thickness of the insulating material may be less than 5/64 inch (2.0 mm) if the material is determined to be acceptable when evaluated in accordance with 6.1.2.

9 Accessibility of Moving Parts

9.1 Specific tests, markings, guards, and the like, are detailed for some appliances, but such detailed requirements apply to more or less common constructions and specific features. Other appliances not contemplated herein are to be given appropriate consideration regarding compliance with these detailed requirements.

9.2 There are risks of injury to persons inherent in some appliances that, if completely eliminated, would defeat the utility of the appliance. The requirements in this section are intended to reduce the risks, while retaining the normal function of such an appliance.

9.3 If various functional attachments are available for use with a basic appliance, each attachment is to be considered individually.

9.4 An enclosure, a frame, a guard, a handle, or the like, shall not be sufficiently sharp to constitute a risk of injury to persons in normal maintenance and use.

9.5 A moving part shall be guarded or enclosed to reduce the likelihood of injury to persons.

9.6 Among the factors to be considered when judging the acceptability of an exposed moving part are:

a) Degree of exposure necessary to perform its intended function;

b) Sharpness of the part;

c) The likelihood of unintentional contact with the part;

d) The speed of the part; and

e) The likelihood that a part of the body could be endangered, or that clothing could be entangled, resulting in a risk of injury to persons.

9.7 Some guards provided over moving parts are required to be self-restoring. Other features of guards that are to be considered include:

a) Removability without the use of a tool;

b) Removability for servicing and likelihood of replacement;

c) Strength and rigidity;

d) Completeness; and

e) Creation of a risk of injury to persons, such as a pinch point, and the necessity for additional handling because of the increased need for servicing, such as cleaning, unjamming, and the like.

9.8 An opening in a guard or enclosure around a moving part capable of causing injury, such as a cutting tool, a fan, a pulley, a gear, a chain, or the like, shall have a minor dimension less than 1 inch (25.4 mm).

AVA Documents
Document Sharing Hub
Full document details: UL 82 2021

Exception: This requirement does not apply to an opening for cutting edges or a discharge chute of an appliance.

9.9 The unobstructed distance from the opening to the moving part specified in 9.8, shall not be less than 8D minus 1.5 inches (38 mm), in which D is the minor dimension of the opening in inches (mm).

Exception: A fan is considered to be acceptably guarded if the blade cannot be contacted with the probe illustrated in Figure 10.2.

9.10 An enclosure or guard over a rotating part and a discharge guide or deflector shall be sufficiently complete and shall have such strength as to:

a) Contain and deflect a part that, because of breakage or other reasons, may become loose or separated from the rotating part; and

b) Retain a foreign object that may be struck and propelled by the rotating part.

9.11 If the breakage or deformation of an enclosure, a frame, a guard, and the like, could result in a risk of injury to persons, the material of the part shall have the properties necessary to withstand the expected loading conditions.

9.12 A device that automatically starts an appliance, such as a timer, an automatically reset overload-protective device, or the like, shall not be employed unless it can be demonstrated that automatic starting will not result in a risk of injury to persons.

10 Accessibility of Live Parts

10.1 General

10.1.1 Electrical parts of an appliance shall be located or enclosed to reduce the likelihood of unintentional contact with uninsulated live parts. Insulated brush caps do not require additional enclosure.

10.1.2 An opening anywhere in the enclosure of a hand-supported appliance, or in the handle portion, the area likely to be handled in guiding during normal operation, of an appliance that normally rests on the ground and is guided by the handle is acceptable if the probe of Figure 10.1, when inserted as far as possible into the opening:

a) Does not enter the opening for a distance of more than 1/8 inch (3.2 mm); and

b) Does not touch any uninsulated live part or film-coated wire.

Documents
Document Sharing Hub
Full document details: UL 82 2021

Figure 10.1

Probe for hand-supported enclosure

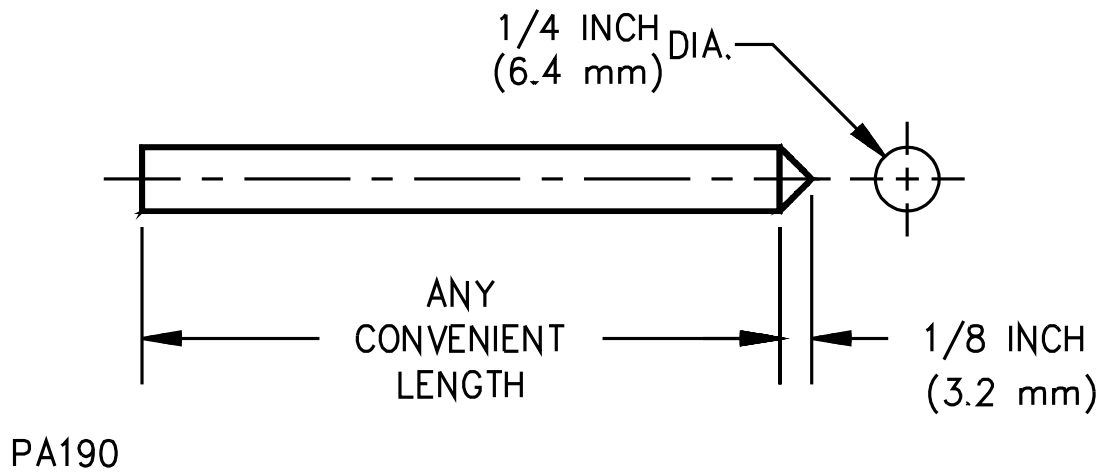

10.1.3 With reference to the requirement in 10.1.1, and except as indicated in 10.1.2, an opening is capable of being used when:

a) A probe as illustrated in Figure 10.2, cannot be made to touch any uninsulated live part or any film-coated wire when inserted through the opening in any possible direction using no appreciable force; and

b) A probe as illustrated in Figure 10.3, cannot be made to touch any uninsulated live part when inserted through the opening in any possible direction using no appreciable force.

Documents
Document Sharing Hub
Full document details: UL 82 2021

Figure 10.2

IEC articulate probe

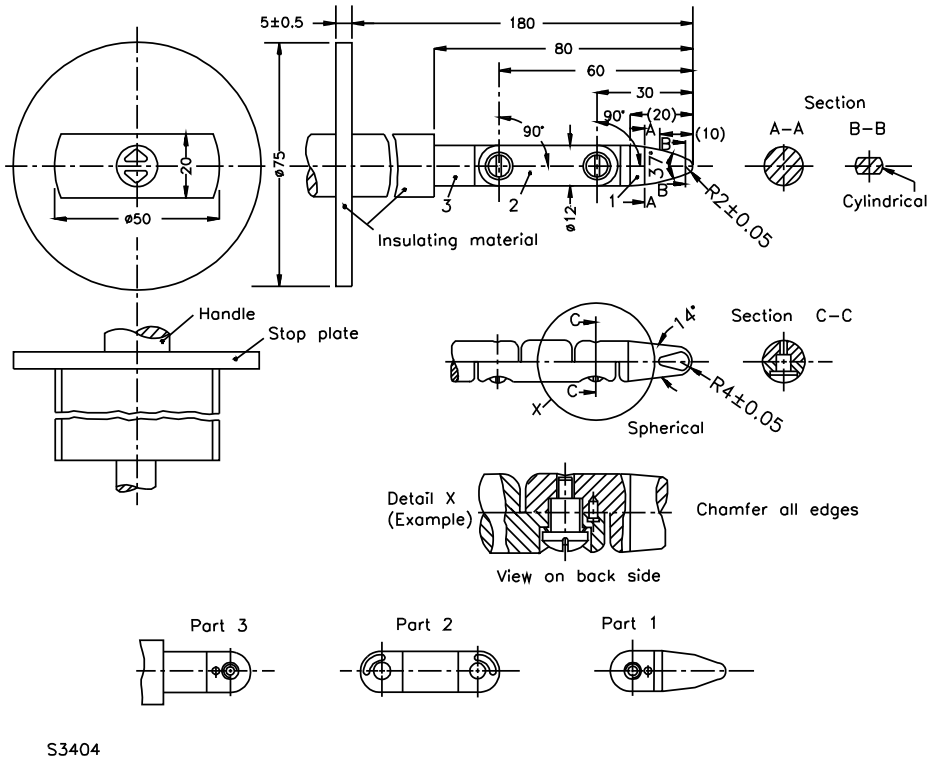

Figure 10.3

IEC test pin

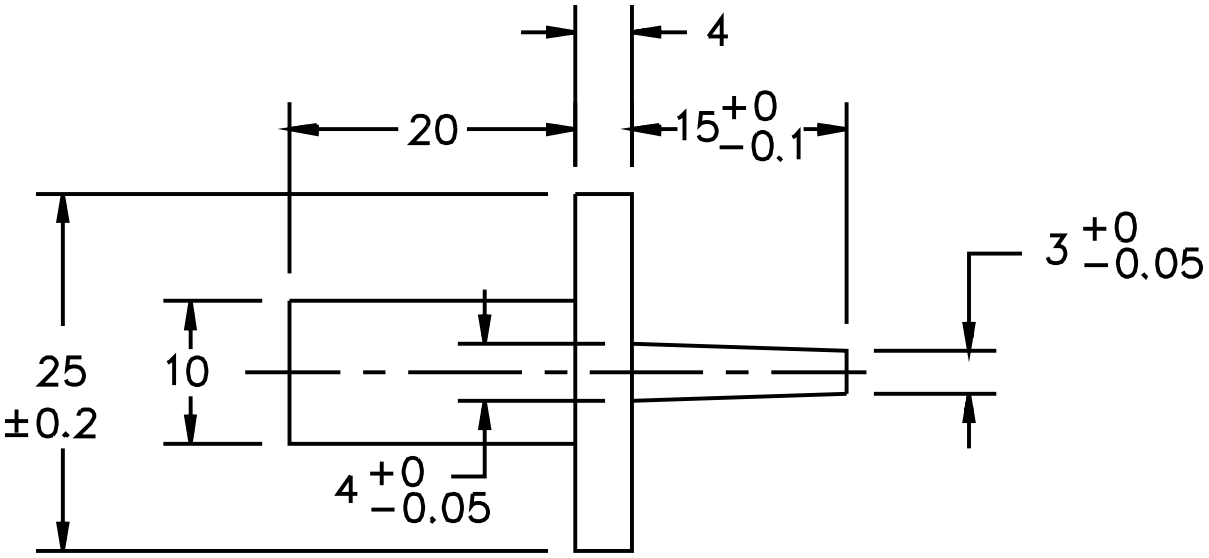

S2962

Dimensions in millimeters

AVA Documents
Document Sharing Hub

10.1.4 The opening illustrated in Figure 10.4, is acceptable if, within the enclosure, there is no uninsulated live part or film-coated wire:

a) Less than X distance from the perimeter of the opening; and

b) Within the volume generated by projecting the perimeter distance X normal to its plane.

X equals five times the diameter of the largest round rod that can be inserted through the opening, but not less than 4 inches (102 mm). In evaluating an opening, any barrier located within the volume is to be ignored unless it intersects the boundaries of the volume in a continuous, closed line.

Figure 10.4

Opening in enclosure

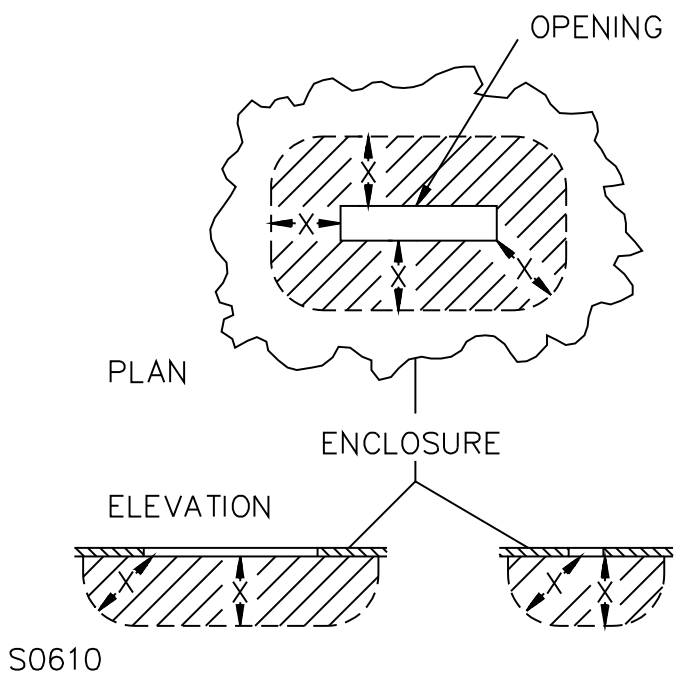

Proportions exaggerated for clarity

10.1.5 During the examination of an appliance to determine compliance with the requirements in 10.1.1, a part of the outer enclosure that may be removed without the use of a tool by the user of the appliance, to permit the attachment of accessories, to allow access to means for making operating adjustments, or for another reason, is to be disregarded – that is, it will not be assumed that the part in question reduces the risk of electric shock unless marked in accordance with 53.5.

10.1.6 A latch or fastener that is intended to be opened by use of a coin or the like is considered to be capable of being opened without the use of a tool.

Documents
Document Sharing Hub
Full document details: UL 82 2021