UL 859

ISBN 0-7629-0773-8

Household Electric Personal Grooming Appliances

UL COPYRIGHTED MATERIAL –
NOT AUTHORIZED FOR FURTHER REPRODUCTION OR
DISTRIBUTION WITHOUT PERMISSION FROM UL

Documents
Document Sharing Hub

Copyright Underwriters Laboratories Inc.
Provided by IHS under license with UL
No reproduction or networking permitted without license from IHS
Not for Resale
Full document details: UL 859 2006

UL COPYRIGHTED MATERIAL –
NOT AUTHORIZED FOR FURTHER REPRODUCTION OR
DISTRIBUTION WITHOUT PERMISSION FROM UL

Documents
Document Sharing Hub

--`,,```,,,,`````-`-`,,`,,`,`,,`---

Copyright Underwriters Laboratories Inc.
Provided by IHS under license with UL
No reproduction or networking permitted without license from IHS
Not for Resale
Full document details: UL 859 2006

Underwriters Laboratories Inc. (UL)
333 Pfingsten Road
Northbrook, IL 60062-2096

UL Standard for Safety for Household Electric Personal Grooming Appliances, UL 859

Tenth Edition, Dated August 30, 2002

Revisions: This Standard contains revisions through and including February 10, 2006.

Summary of Topics

These editorial revisions to ANSI/UL 859 replace all references to UL 1020, the Standard for Thermal Cutoffs for Use in Electrical Appliances and Components, with reference to UL 60691, the Standard for Thermal-Links – Requirements and Application Guide. UL 1020 was withdrawn and superseded by UL 60691.

UL Standards for Safety are developed and maintained in the Standard Generalized Markup Language (SGML). SGML -- an international standard (ISO 8879-1986) -- is a descriptive markup language that describes a document's structure and purpose, rather than its physical appearance on a page. Due to formatting differences resulting from the use of UL's new electronic publishing system, please note that additional pages (on which no requirements have been changed) may be included in revision pages due to relocation of existing text and reformatting of the Standard.

Text that has been changed in any manner is marked with a vertical line in the margin. Changes in requirements are marked with a vertical line in the margin and are followed by an effective date note indicating the date of publication or the date on which the changed requirement becomes effective.

The following table lists the future effective dates with the corresponding item.

Future Effective Date	Reference
July 1, 2007	Paragraphs 16.5, 37.5.1, 37.5.1.1, 37.5.1.1.1, 37.5.1.2, 39.1.1, 39.2.1 – 39.2.4, 39.2A.1 – 39.2A.4; Section 42A; and Table 42.1

The revisions dated February 10, 2006 include a reprinted title page (page1) for this Standard.

The revisions dated February 10, 2006 editorially replace all references to UL 1020 with the reference to UL 60691.

As indicated on the title page (page 1), this UL Standard for Safety is an American National Standard. Attention is directed to the note on the title page of this Standard outlining the procedures to be followed to retain the approved text of this ANSI/UL Standard.

The UL Foreword is no longer located within the UL Standard. For information concerning the use and application of the requirements contained in this Standard, the current version of the UL Foreword is located on ULStandardsInfoNet at: http://ulstandardsinfonet.ul.com/ulforeword.html

The master for this Standard at UL's Northbrook Office is the official document insofar as it relates to a UL service and the compliance of a product with respect to the requirements for that product and service, or if there are questions regarding the accuracy of this Standard.

UL COPYRIGHTED MATERIAL –
NOT AUTHORIZED FOR FURTHER REPRODUCTION OR
DISTRIBUTION WITHOUT PERMISSION FROM UL

Documents
Document Sharing Hub

Copyright Underwriters Laboratories Inc.
Provided by IHS under license with UL
No reproduction or networking permitted without license from IHS
Not for Resale
Full document details: UL 859 2006

UL's Standards for Safety are copyrighted by UL. Neither a printed copy of a Standard, nor the distribution diskette for a Standard-on-Diskette and the file for the Standard on the distribution diskette should be altered in any way. All of UL's Standards and all copyrights, ownerships, and rights regarding those Standards shall remain the sole and exclusive property of UL.

All rights reserved. No part of this publication may be reproduced, stored in a retrieval system, or transmitted in any form by any means, electronic, mechanical photocopying, recording, or otherwise without prior permission of UL.

Revisions of UL Standards for Safety are issued from time to time. A UL Standard for Safety is current only if it incorporates the most recently adopted revisions.

UL provides this Standard ″as is″ without warranty of any kind, either expressed or implied, including but not limited to, the implied warranties of merchantability or fitness for any purpose.

In no event will UL be liable for any special, incidental, consequential, indirect or similar damages, including loss of profits, lost savings, loss of data, or any other damages arising out of the use of or the inability to use this Standard, even if UL or an authorized UL representative has been advised of the possibility of such damage. In no event shall UL's liability for any damage ever exceed the price paid for this Standard, regardless of the form of the claim.

UL will attempt to answer support requests concerning electronic versions of its Standards. However, this support service is offered on a reasonable efforts basis only, and UL may not be able to resolve every support request. UL supports the electronic versions of its Standards only if they are used under the conditions and operating systems for which it is intended. UL's support policies may change from time-to-time without notification.

UL reserves the right to change the format, presentation, file types and formats, delivery methods and formats, and the like of both its printed and electronic Standards without prior notice.

Purchasers of the electronic versions of UL's Standards for Safety agree to defend, indemnify, and hold UL harmless from and against any loss, expense, liability, damage, claim, or judgement (including reasonable attorney's fees) resulting from any error or deviation introduced while purchaser is storing an electronic Standard on the purchaser's computer system.

If a single-user version electronic Standard was purchased, one copy of this Standard may be stored on the hard disk of a single personal computer, or on a single LAN file-server or the permanent storage device of a multiple-user computer in such a manner that this Standard may only be accessed by one user at a time and for which there is no possibility of multiple concurrent access.

If a multiple-user version electronic Standard was purchased, one copy of the Standard may be stored on a single LAN file-server, or on the permanent storage device of a multiple-user computer, or on an Intranet server. The number of concurrent users shall not exceed the number of users authorized.

Electronic Standards are intended for on-line use, such as for viewing the requirements of a Standard, conducting a word search, and the like. Only one copy of the Standard may be printed from each single-user version of an electronic Standard. Only one copy of the Standard may be printed for each authorized user of a multiple-user version of an electronic Standard. Because of differences in the computer/software/printer setup used by UL and those of electronic Standards purchasers, the printed copy obtained by a purchaser may not look exactly like the on-line screen view or the printed Standard.

An employee of an organization purchasing a UL Standard can make a copy of the page or pages being viewed for their own fair and/or practical internal use.

UL COPYRIGHTED MATERIAL –
NOT AUTHORIZED FOR FURTHER REPRODUCTION OR
DISTRIBUTION WITHOUT PERMISSION FROM UL

Documents
Document Sharing Hub

Copyright Underwriters Laboratories Inc.
Provided by IHS under license with UL
No reproduction or networking permitted without license from IHS
Not for Resale
Full document details: UL 859 2006

The requirements in this Standard are now in effect, except for those paragraphs, sections, tables, figures, and/or other elements of the Standard having future effective dates as indicated in the note following the affected item. The prior text for requirements that have been revised and that have a future effective date are located after the Standard, and are preceded by a ″SUPERSEDED REQUIREMENTS″ notice.

New product submittals made prior to a specified future effective date will be judged under all of the requirements in this Standard including those requirements with a specified future effective date, unless the applicant specifically requests that the product be judged under the current requirements. However, if the applicant elects this option, it should be noted that compliance with all the requirements in this Standard will be required as a condition of continued Listing and Follow-Up Services after the effective date, and understanding of this should be signified in writing.

Copyright © 2006 Underwriters Laboratories Inc.

UL COPYRIGHTED MATERIAL –
NOT AUTHORIZED FOR FURTHER REPRODUCTION OR
DISTRIBUTION WITHOUT PERMISSION FROM UL

Documents
Document Sharing Hub

Copyright Underwriters Laboratories Inc.
Provided by IHS under license with UL
No reproduction or networking permitted without license from IHS
Not for Resale
Full document details: UL 859 2006

This Standard consists of pages dated as shown in the following checklist:

Page	Date
1	February 10, 2006
2-4	June 16, 2004
5	February 10, 2006
6-7	August 30, 2002
8-9	June 16, 2004
10-23	August 30, 2002
24	June 16, 2004
25-51	August 30, 2002
52	June 16, 2004
53-56	August 30, 2002
57	June 16, 2004
58-67	August 30, 2002
68	June 16, 2004
69	August 30, 2002
70-71	May 31, 2005
72	August 30, 2002
73	May 31, 2005
74-80	August 30, 2002
81	June 16, 2004
82-83	August 30, 2002
84-84A	May 31, 2005
84B	June 16, 2004
85-87	August 30, 2002
88-90	June 16, 2004
91	August 30, 2002
92-94	June 16, 2004
94A	May 31, 2005
94B	June 16, 2004
95-101	August 30, 2002
102-104B	June 16, 2004
105-106	August 30, 2002
107-108B	February 10, 2006
109-152	August 30, 2002
SA1-SA6	August 30, 2002
A1-A2	February 10, 2006
SR1	June 16, 2004
SR2	May 31, 2005

UL COPYRIGHTED MATERIAL –
NOT AUTHORIZED FOR FURTHER REPRODUCTION OR
DISTRIBUTION WITHOUT PERMISSION FROM UL

Documents
Document Sharing Hub

Copyright Underwriters Laboratories Inc.
Provided by IHS under license with UL
No reproduction or networking permitted without license from IHS
Not for Resale
Full document details: UL 859 2006

AUGUST 30, 2002
(Title Page Reprinted: February 10, 2006)

ANSI/UL 859-2005

1

UL 859

Standard for Household Electric Personal Grooming Appliances

The first, second, and third editions were titled Beauty-Parlor Equipment. The fourth, fifth, and sixth editions were titled Electric Personal Grooming Appliances.

First Edition – September, 1954
Second Edition – November, 1966
Third Edition – May, 1971
Fourth Edition – July, 1975
Fifth Edition – July, 1978
Sixth Edition – February, 1984
Seventh Edition – January, 1988
Eighth Edition – January, 1991
Ninth Edition – December, 1995

Tenth Edition

August 30, 2002

The most recent designation of ANSI/UL 859 as an American National Standard (ANSI) occurred on May 25, 2005.

This ANSI/UL Standard for Safety, which consists of the Tenth Edition with revisions through February 10, 2006, is under continuous maintenance, whereby each revision is ANSI approved upon publication. Comments or proposals for revisions on any part of the Standard may be submitted to UL at any time. Proposals should be submitted via a Proposal Request in UL's On-Line Collaborative Standards Development System (CSDS) at http://csds.ul.com.

An effective date included as a note immediately following certain requirements is one established by Underwriters Laboratories Inc.

Revisions of this Standard will be made by issuing revised or additional pages bearing their date of issue. A UL Standard is current only if it incorporates the most recently adopted revisions, all of which are itemized on the transmittal notice that accompanies the latest set of revised requirements.

ISBN 0-7629-0773-8

COPYRIGHT © 1991, 2006 UNDERWRITERS LABORATORIES INC.

UL COPYRIGHTED MATERIAL –
NOT AUTHORIZED FOR FURTHER REPRODUCTION OR
DISTRIBUTION WITHOUT PERMISSION FROM UL

Documents
Document Sharing Hub

Copyright Underwriters Laboratories Inc.
Provided by IHS under license with UL
No reproduction or networking permitted without license from IHS
Not for Resale
Full document details: UL 859 2006

No Text on This Page

UL COPYRIGHTED MATERIAL –
NOT AUTHORIZED FOR FURTHER REPRODUCTION OR
DISTRIBUTION WITHOUT PERMISSION FROM UL

Documents
Document Sharing Hub

Copyright Underwriters Laboratories Inc.
Provided by IHS under license with UL
No reproduction or networking permitted without license from IHS
Not for Resale
Full document details: UL 859 2006

CONTENTS

INTRODUCTION

1 Scope 9
2 General 10
2.1 Components 10
2.2 Units of measurement 10
2.3 Undated references 10
3 Glossary 11

CONSTRUCTION

4 General 16
5 Hair Dryer Immersion Protection 17
6 Frame and Enclosure 22
6.1 General 22
6.2 Polymeric enclosures 23
6.3 Metal enclosures 23
6.4 Corrosion resistance 24
6.5 Accessibility of live parts 24
6.6 Doors and covers 30
7 Reduction of Risk of Injury to Persons 30
7.1 General 30
7.2 Appliances with reservoirs 31
7.3 Wax depilatory appliances 31
8 Mechanical Assembly 32
9 Stability 34
10 Hanging and Mounting Means 34
11 Supply Connections 35
11.1 Permanently-connected appliances 35
11.2 Wiring terminals 35
11.3 Cord-connected appliances 37
11.4 Strain relief 44
11.5 Bushings 44
11.6 Direct plug-in appliances 45
12 Live Parts 49
13 Reservoirs 50
14 Internal Wiring 50
15 Heating Element 51
16 Electrical Insulation 52
17 Thermal Insulation 52
18 Overcurrent Protection 53
19 Thermal Cutoffs (Fusible Links) 53
20 Immersion-Detection Circuit-Interrupters (IDCIs) 53
21 Lampholders and Receptacles 55
22 Switches 56
22.1 General 56
22.2 Dual-voltage selector 57
23 Automatic Controls 57
24 Spacings 58
25 Grounding 59

UL COPYRIGHTED MATERIAL –
NOT AUTHORIZED FOR FURTHER REPRODUCTION OR
DISTRIBUTION WITHOUT PERMISSION FROM UL
Documents
Document Sharing Hub

Copyright Underwriters Laboratories Inc.
Provided by IHS under license with UL
No reproduction or networking permitted without license from IHS
Not for Resale
Full document details: UL 859 2006

26 Motors 60
26.1 Construction 60
26.2 Brush wear-out 60

PERFORMANCE

27 General 61
28 Strength of Enclosure Test 61
29 Tip-Over Test 62
30 Stability Test 62
31 Leakage Current Test 63
32 Leakage Current Test Following Humidity Conditioning 65
33 Immersion-Detection Circuit-Interrupter (IDCI) Trip Time Measurement Test 66
33.1 As-received hair dryers 66
33.2 Conditioned hair dryers 68
34 Dew Point Humidity Test 68
35 Conductive Coating Test 69
35.1 General 69
35.2 Thermal cycling 70
35.3 Limited thermal aging 71
35.4 Short term aging 73
35.5 Humidity conditioning 73
36 Power Input Test 73
37 Normal Temperature Test 73
37.1 All appliances 73
37.2 Wax depilatory appliances 81
37.3 Heated air curling irons and brushes 81
37.4 Hair-drying appliances 84
37.5 Hand-supported hair dryers 84
37.6 Motor slowdown test method 88
37.7 Temperature test – motor slowdown 88
38 Dielectric Voltage-Withstand Test 88
39 Abnormal Operation Tests 89
39.1 General 89
39.2 Hair dryers – drape test 92
39.2A Hair dryer locked rotor test 92
39.3 Hand-supported hair dryers 93
39.4 Dual-voltage appliances 95
39.5 All appliances – short-circuit, stall tests 96
39.6 Hair curler heater – short-circuit test 96
39.7 Bonnet-type hair dryers – hair entanglement test 97
39.8 Wax depilatory appliances 97
39.9 Hair dryer immersion protective devices with convenience receptacles 98
39.10 Appliances having an automatically-controlled preheat cycle 99
40 Exposure to Moisture Test 100
41 Strain Relief Test 101
42 Cord Flexing Test 101
42A Cord Flexing Test for Appliance Leakage-Current-Interrupter (ALCI) 103
43 Test for Security of Swivel Assembly 104A
44 Swivel Endurance Test 104A
45 Hinge Endurance Test 105
46 Test of Automatic Controls 105
46.1 Overload 105

UL COPYRIGHTED MATERIAL –
NOT AUTHORIZED FOR FURTHER REPRODUCTION OR
DISTRIBUTION WITHOUT PERMISSION FROM UL
Documents
Document Sharing Hub

Copyright Underwriters Laboratories Inc.
Provided by IHS under license with UL
No reproduction or networking permitted without license from IHS
Not for Resale
Full document details: UL 859 2006

46.2 Endurance 106
47 Test of Thermal Cutoffs (Fusible Links) 107
48 Motor Control Overload Test 108
49 Grounding Continuity Test 108
50 Test for Permanence of Cord Tag for Hand-Supported Hair-Drying Appliances 108A
50.1 General 108A
50.2 Test conditions 109
50.3 Test method 109
51 Mounting Means Strength Test 109
52 Extended Operation Test 110
53 Heating Element Endurance Test 113
54 Test of Physical Properties of a Liquid Container, Seal, or Diaphragm 113
55 Label Adhesion Test 114
56 Flammability Test – Wax for Depilatory Appliances 116

MANUFACTURING AND PRODUCTION-LINE TESTS

57 Dielectric Voltage-Withstand Test 116
58 Grounding Continuity Test 119
58.1 Continuity of grounding connection 119
58.2 Electrical indicating device 119
59 Hair Dryer Power Input Test 119

RATINGS

60 Details 120

MARKINGS

61 Details 120
61.1 General 120
61.2 Body- or table-supported hood- or bonnet-type hair dryers 122
61.3 Dual-voltage appliances 122
61.4 Hand-supported hair-drying appliances 122
61.5 Permanently-installed wall-mounted hair dryers 124
61.6 Curling irons 126
61.7 Direct plug-in appliances 128
61.8 Wax depilatory appliances 129
61.9 Appliances with IDCIs, GFCIs, or similar protective devices 129
61.10 Convenience receptacle of a hand-supported hair dryer immersion protective device 130

INSTRUCTION MANUALS

62 General 130
63 Instructions Pertaining to a Risk of Fire, Electric Shock, or Injury to Persons 131
64 Installation Instructions 139
65 Operating Instructions 140
66 User-Maintenance Instructions 144

UL COPYRIGHTED MATERIAL –
NOT AUTHORIZED FOR FURTHER REPRODUCTION OR
DISTRIBUTION WITHOUT PERMISSION FROM UL
Documents
Document Sharing Hub

Copyright Underwriters Laboratories Inc.
Provided by IHS under license with UL
No reproduction or networking permitted without license from IHS
Not for Resale
Full document details: UL 859 2006

ELECTRODE-TYPE APPLIANCES

67 General 144
68 Construction 145
69 Operation Test 145
70 Leakage Current Test 146
71 Disassembly and Reassembly 147
72 Markings 148
73 Operating Instructions 149

WALL-HUNG HAIR DRYERS

74 Scope 149
75 General 150
76 Construction 150
77 Performance 150
78 Markings 151
79 Use and Care Instructions 151
80 Installation Instructions 151

SUPPLEMENT SA - HAIR DRYER ACCESSORIES

SA1 Scope SA1
SA2 General SA1
SA3 Markings SA1
SA3.1 General SA1
SA3.2 Hair dryer accessories SA2
SA3.3 Product packaging SA2
SA3.4 Instruction sheet SA2
SA4 Instructions SA3

APPENDIX A

Standards for Components A1

UL COPYRIGHTED MATERIAL –
NOT AUTHORIZED FOR FURTHER REPRODUCTION OR
DISTRIBUTION WITHOUT PERMISSION FROM UL

Documents
Document Sharing Hub

Copyright Underwriters Laboratories Inc.
Provided by IHS under license with UL
No reproduction or networking permitted without license from IHS
Not for Resale
Full document details: UL 859 2006

No Text on This Page

UL COPYRIGHTED MATERIAL –
NOT AUTHORIZED FOR FURTHER REPRODUCTION OR
DISTRIBUTION WITHOUT PERMISSION FROM UL

Documents
Document Sharing Hub

Copyright Underwriters Laboratories Inc.
Provided by IHS under license with UL
No reproduction or networking permitted without license from IHS
Not for Resale
Full document details: UL 859 2006

This page intentionally left blank.

UL COPYRIGHTED MATERIAL –
NOT AUTHORIZED FOR FURTHER REPRODUCTION OR
DISTRIBUTION WITHOUT PERMISSION FROM UL

Documents
Document Sharing Hub

Copyright Underwriters Laboratories Inc.
Provided by IHS under license with UL
No reproduction or networking permitted without license from IHS
Not for Resale
Full document details: UL 859 2006

INTRODUCTION

1 Scope

1.1 These requirements cover electric personal grooming appliances intended for household use, such as hair curlers and dryers, combs, brushes, and similar appliances to be used in accordance with the National Electrical Code, NFPA 70.

1.2 These requirements do not cover appliances rated more than 250 volts nor appliances covered in the following Standards for Safety:

a) The Standard for Medical and Dental Equipment, UL 544;

b) The Standard for Medical Electrical Equipment, Part 1: General Requirements for Safety, UL 2601–1;

c) The Standard for Personal Hygiene and Health Care Appliances, UL 1431;

d) The Standard for Hair Clipping and Shaving Appliances, UL 1028;

e) The Standard for Motor-Operated Massage and Exercise Machines, UL 1647;

f) The Standard for Electric Heating Pads, UL 130; and

g) The Standard for Commercial Electric Personal Grooming Appliances, UL 1727.

1.2 revised August 30, 2002

1.3 *Deleted June 16, 2004*

UL COPYRIGHTED MATERIAL –
NOT AUTHORIZED FOR FURTHER REPRODUCTION OR
DISTRIBUTION WITHOUT PERMISSION FROM UL

Documents
Document Sharing Hub

Copyright Underwriters Laboratories Inc.
Provided by IHS under license with UL
No reproduction or networking permitted without license from IHS
Not for Resale
Full document details: UL 859 2006

2 General

2.1 Components

2.1.1 Except as indicated in 2.1.2, a component of a product covered by this standard shall comply with the requirements for that component. See Appendix A for a list of standards covering components used in the products covered by this standard.

2.1.2 A component is not required to comply with a specific requirement that:

a) Involves a feature or characteristic not required in the application of the component in the product covered by this standard, or

b) Is superseded by a requirement in this standard.

2.1.3 A component shall be used in accordance with its rating established for the intended conditions of use.

2.1.4 Specific components are incomplete in construction features or restricted in performance capabilities. Such components are intended for use only under limited conditions, such as certain temperatures not exceeding specified limits, and shall be used only under those specific conditions.

2.2 Units of measurement

2.2.1 Values stated without parentheses are the requirement. Values in parentheses are explanatory or approximate information.

2.2.2 Unless otherwise indicated, all voltage and current values mentioned in this standard are root-mean-square (rms).

2.3 Undated references

2.3.1 Any undated reference to a code or standard appearing in the requirements of this standard shall be interpreted as referring to the latest edition of that code or standard.

UL COPYRIGHTED MATERIAL –
NOT AUTHORIZED FOR FURTHER REPRODUCTION OR
DISTRIBUTION WITHOUT PERMISSION FROM UL

Documents
Document Sharing Hub

Copyright Underwriters Laboratories Inc.
Provided by IHS under license with UL
No reproduction or networking permitted without license from IHS
Not for Resale
Full document details: UL 859 2006

3 Glossary

3.1 For the purpose of this standard the following definitions apply.

3.2 AUTOMATIC CONTROL – A device intended for automatic control of operating time, temperature, or pressure under conditions of intended operation and not for protection against conditions resulting from abnormal operations.

3.3 AUTOMATICALLY CONTROLLED APPLIANCE – An appliance that complies with one or more of the following conditions:

a) The repeated starting of the appliance is independent of any manual control if, after one complete cycle of operation, a limit device or similar component opens the circuit;

b) During any single preset cycle of operation, the motor is caused to stop and restart;

c) When the appliance is energized, the initial starting of the motor may be intentionally delayed beyond intended, conventional starting; and

d) For an appliance using a motor with a separate starting winding, during any single predetermined cycle of operation, automatic changing of the mechanical load reduces the motor speed sufficiently to re-establish starting-winding connections to the supply circuit.

3.4 BODY-SUPPORTED APPLIANCE – An appliance that is physically supported by any part of the body, other than the hand of the user, during the performance of its intended functions (such as a shoulder-, body-, or head-supported hair dryer). Reference is to be made to the user manual of the appliance in establishing the intended functions of the appliance.

3.5 COUNTER-SUPPORTED APPLIANCE – An appliance that is physically supported by a counter, table, or bench during the performance of its intended functions (such as a bonnet-type hair dryer). Reference is to be made to the user manual of the appliance in establishing the intended functions of the appliance.

3.6 DIRECT PLUG-IN APPLIANCE – An appliance, without a power supply cord, that is physically supported by direct insertion of its integral blades into a receptacle.

3.7 DUAL-VOLTAGE APPLIANCE – An appliance rated for use at 120 or 240 volts and provided with a means to change from one voltage to the other.

3.8 FIXED APPLIANCE – An appliance intended to be permanently connected electrically.

3.9 FLOOR-SUPPORTED APPLIANCE – An appliance that is physically supported by the floor during the performance of its intended functions (such as hair dryers with roll-about stands). Reference is to be made to the user manual of the appliance in establishing the intended functions of the appliance.

3.10 HAIR CRIMPING IRON – A hand-supported hair curling appliance having hinged arms and ridged or wavy surfaced electrically heated tongs between which hair is placed. A typical construction is shown in Figure 3.1.

UL COPYRIGHTED MATERIAL –
NOT AUTHORIZED FOR FURTHER REPRODUCTION OR
DISTRIBUTION WITHOUT PERMISSION FROM UL

Documents
Document Sharing Hub

Copyright Underwriters Laboratories Inc.
Provided by IHS under license with UL
No reproduction or networking permitted without license from IHS
Not for Resale
Full document details: UL 859 2006

Figure 3.1
Typical hair crimping iron

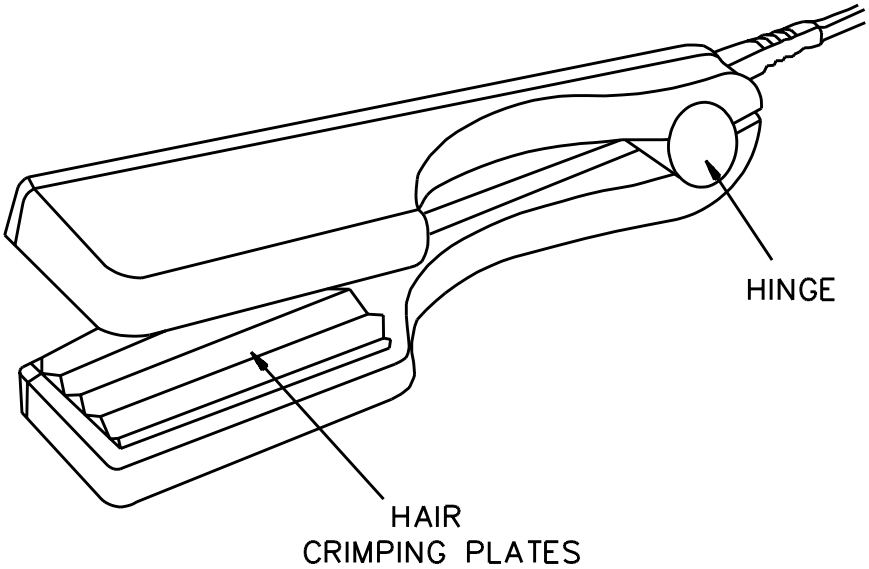

S3516

3.11 HAIR CURLER HEATER (HAIR SETTER) – A counter-supported appliance having posts or wells on or in which hair curling devices (such as rollers) are heated before being applied to the hair. The term also applies to a construction that has individual electrical hair curlers (rollers) with built-in heating elements and male electrical fittings which plug into female contacts in the appliance.

3.12 HAIR STRAIGHTENING IRON – An appliance similar to a hair crimping iron described in 3.10 except that the hair crimping plates are replaced with flat plates.

3.13 HAND-HELD APPLIANCE/HAND-GUIDED APPLIANCE – A portable appliance that during intended use is contacted by the hand of the user for purposes of electrical or physical control but not for complete support.

3.14 HAND-SUPPORTED APPLIANCE – An appliance that is physically supported by the hand of the user during the performance of its intended functions (such as a curling iron). Reference is to be made to the user manual of the appliance in establishing the intended functions of the appliance.

3.15 HEATED AIR CURLING IRON (or BRUSH) – A curling iron (or brush) in which a fan included in the appliance blows air over the heating elements and out through openings in the barrel of the appliance.

3.16 IMMERSION-DETECTION CIRCUIT-INTERRUPTER (IDCI) – A resettable or non-resettable device that interrupts (trips) the supply circuit to an immersed appliance when a conductive liquid enters the appliance and contacts both a live part and an internal sensor which causes the current flow between the live part and the sensor to exceed a predetermined level.

UL COPYRIGHTED MATERIAL –
NOT AUTHORIZED FOR FURTHER REPRODUCTION OR
DISTRIBUTION WITHOUT PERMISSION FROM UL

Documents
Document Sharing Hub

Copyright Underwriters Laboratories Inc.
Provided by IHS under license with UL
No reproduction or networking permitted without license from IHS
Not for Resale
Full document details: UL 859 2006

3.17 INPUT VOLTAGE SELECTOR – The means provided on an appliance to adjust for the available input voltage.

3.18 LIMIT CONTROL – As applicable to hand-supported hair dryers, a limit control, as shown in item A of Figure 3.2, is a non-resettable control (a control intended to operate only once) that operates to open all electrical circuits to reduce the risk of fire or electric shock.

UL COPYRIGHTED MATERIAL –
NOT AUTHORIZED FOR FURTHER REPRODUCTION OR
DISTRIBUTION WITHOUT PERMISSION FROM UL

--`,,```,,,,````-`-`,,`,,`,`,,`---

Documents
Document Sharing Hub

Copyright Underwriters Laboratories Inc.
Provided by IHS under license with UL
No reproduction or networking permitted without license from IHS
Not for Resale
Full document details: UL 859 2006

Figure 3.2
Typical hair dryer circuit

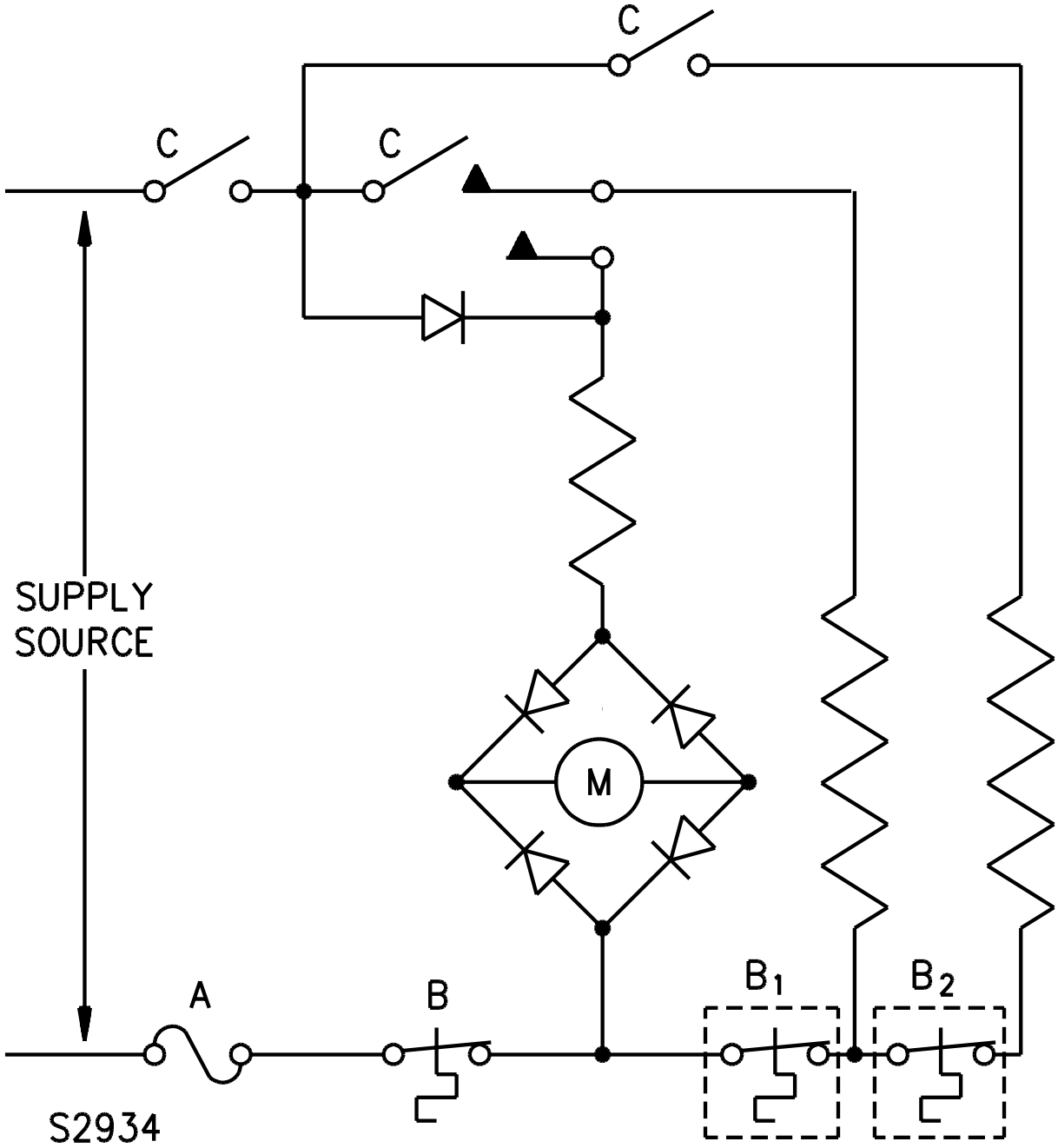

A – Limit control (a non-resettable device, as defined in 3.18).

B – Temperature control (a calibrated automatic-reset device, as defined in 3.25).

B_1, B_2 – Temperature control shown at two other locations.

C – Switches.

M – Motor.

UL COPYRIGHTED MATERIAL –
NOT AUTHORIZED FOR FURTHER REPRODUCTION OR
DISTRIBUTION WITHOUT PERMISSION FROM UL

Documents
Document Sharing Hub

Copyright Underwriters Laboratories Inc.
Provided by IHS under license with UL
No reproduction or networking permitted without license from IHS
Not for Resale
Full document details: UL 859 2006

3.19 LIMITED ENERGY PRIMARY CIRCUIT – A line voltage circuit that incorporates a limiting impedance in series with the supply circuit so that:

a) The circuit potential on the load side of the limiting impedance does not exceed 42.4 volts peak (30 volts rms) under intended conditions; and

b) The maximum energy available at the load side of the limiting impedance circuit is 100 volt-amperes under any condition, including abnormal operation.

3.20 LINE VOLTAGE CIRCUIT – A circuit involving a potential of not more than 250 volts and having circuit characteristics in excess of those of a low-voltage circuit or a limited primary energy circuit.

3.21 LOW-VOLTAGE CIRCUIT – A circuit supplied by a primary battery, by a Class 2 transformer, or by a combination of a transformer and fixed impedance that, as a unit, complies with all performance requirements for Class 2 transformers and that does not involve an open circuit potential of more than 42.4 volts peak (30 volts rms).

3.22 PORTABLE APPLIANCE – An appliance capable of being carried or conveyed.

3.23 PREHEAT CYCLE – A cycle of operation, intended for rapid heating, in which the heating element operates at an initial higher level of energy for a period of time. The energy level then declines to a lower normal use temperature-maintenance level. It may fluctuate between the high and low levels during a use of the appliance. The energy level may be controlled by varying the amount of wattage, the duration or duty cycle, or a combination thereof. The change in the energy level may be initiated by a timer, a temperature controller, or a combination of the two. Appliances having a preheat cycle of operation are commonly known as ″Instant Heat″ type. The temperature transient condition associated with the operation of a positive temperature coefficient (PTC) heating element or a thermostat is not considered to be a preheat cycle.

The following are some examples of preheat type appliances:

a) The appliance operates at the higher preheat wattage level for a length of time determined by a timing device or circuit. The wattage then drops to a constant lower temperature-maintenance level for the remainder of operation.

b) The appliance operates at a higher preheat wattage level initially for varying lengths of time depending upon temperature. The wattage varies with time in response to the temperature controller to maintain normal operating temperature.

c) The appliance operates at a fixed wattage level for a predetermined length of time. Then the same amount of wattage is applied on a pre-programmed duty cycle by means of a switching mechanism to maintain normal operating temperature.

d) The appliance operates at a fixed wattage level for a predetermined length of time. Then the same amount of wattage is applied on a duty cycle that adjusts depending upon temperature by means of a switching mechanism and a temperature controller.

3.24 STATIONARY APPLIANCE – A cord-connected appliance intended to be fastened in place or located in a dedicated space.

3.25 TEMPERATURE CONTROL – As applicable to hand-supported hair dryers, a temperature control, as shown in item B of Figure 3.2, is an automatic-reset temperature-sensing control that opens an electrical circuit to limit temperatures during motor slowdown and abnormal operation. A temperature

UL COPYRIGHTED MATERIAL –
NOT AUTHORIZED FOR FURTHER REPRODUCTION OR
DISTRIBUTION WITHOUT PERMISSION FROM UL
Documents
Document Sharing Hub

Copyright Underwriters Laboratories Inc.
Provided by IHS under license with UL
No reproduction or networking permitted without license from IHS
Not for Resale
Full document details: UL 859 2006

control is calibrated and endurance tested for at least 6,000 cycles of operation and complies with all other requirements in the Standard for Limit Controls, UL 353, or the Standard for Temperature-Indicating and -Regulating Equipment, UL 873.

3.26 TEMPERATURE-REGULATING CONTROL – A control that functions only to regulate the temperature under conditions of intended use.

3.27 THERMAL CUT-OFF – A temperature- or temperature- and current-sensitive device that is replaceable but not resettable. It is intended to reduce the risk of fire, electric shock, or injury to persons due to overheating of an appliance during abnormal operation.

3.28 WALL-HUNG APPLIANCE – A cord-connected appliance that is provided with keyhole slots, hanger holes, similar feature for hanging on a wall during the performance of its intended function. A wall-hung appliance may consist of two interconnected units where one is intended to hang on a wall and the other is intended to be supported by hand during use. Reference is to be made to the user manual of the appliance in establishing the intended functions of the appliance.

3.29 WAX DEPILATORY APPLIANCE – An appliance intended for melting a wax-like material (hereafter referred to as wax) that is first applied to and then stripped from the body for the purpose of removing unwanted hair.

CONSTRUCTION

4 General

4.1 In the following text, a requirement that applies only to a specific type or types of appliances, such as a hand-supported hair dryer and a curling iron, is so identified by specific reference in that requirement to the type or types involved. Absence of such specific reference or use of the term ″appliance″ indicates that the requirement applies to all appliances covered by this standard.

4.2 An appliance that is a combination of two or more types (for example, an appliance having a hand-supported part and a counter-supported part), or an appliance that fits the definition of two or more types (for example, an appliance that can be used while supported by hand or while supported by a counter top), is to be investigated in accordance with the applicable requirements for the types of appliances involved. If two requirements that address the same condition differ, the appliance is to be investigated to the more severe requirement.

4.3 A heated air curling iron or brush, as defined in 3.15, shall comply with the requirements applicable to hand-supported hair dryers and curling irons.

4.4 A container for liquid intended for use with the appliance, and supplied as part of the appliance, shall comply with applicable construction requirements.

4.5 A curling iron that is likely to be laid on combustible material shall be provided with a stand made of material resistant to combustion upon which it may be placed when not in use.

Exception: A stand need not be provided if the temperature attained by the appliance is not sufficiently high to cause the ignition of the combustible material.

UL COPYRIGHTED MATERIAL –
NOT AUTHORIZED FOR FURTHER REPRODUCTION OR
DISTRIBUTION WITHOUT PERMISSION FROM UL

Documents
Document Sharing Hub

Copyright Underwriters Laboratories Inc.
Provided by IHS under license with UL
No reproduction or networking permitted without license from IHS
Not for Resale
Full document details: UL 859 2006

4.6 A curling iron that attains a temperature higher than 100°C (212°F) when operated continuously shall be provided with an integral stand. A stand provided for other types of appliances may be a separate device or integral with the appliance.

4.7 With respect to 4.6, an integral stand provided for a curling iron shall be of such design or shape that any surface of the curling iron exceeding 150°C (302°F) will not contact the supporting surface when the curling iron is supported in its intended manner by the stand.

4.8 A polymeric material used as an integral stand in compliance with the requirements in 4.7 shall be rated for the temperature it is subjected to during use.

5 Hair Dryer Immersion Protection

5.1 A hand-supported hair-drying appliance (such as a hair dryer, blower-styler, styler-dryer, heated air comb, heated-air hair curler, curling iron-hair dryer combination, a wall-hung hair dryer or the hand unit of a wall-mounted hair dryer, or a similar appliance) shall be constructed to reduce the risk of electric shock when the appliance is energized, with its power switch in either the ″on″ or ″off″ position, and immersed in water having an electrically conductive path to ground.

5.2 Compliance with 5.1 may be accomplished with the use of an:

a) Integral ground-fault circuit-interrupter (GFCI),

b) Integral immersion-detection circuit-interrupter (IDCI), or

c) Integral protective device of another type that de-energizes all current-carrying parts (hereafter referred to as a protective device) when the hand-supported hair-drying appliance is immersed in water having an electrically conductive path to ground.

5.3 If a hand-supported hair-drying appliance is provided with a GFCI, the GFCI shall comply with the requirements for Class A cord-connected GFCIs in the Standard for Ground-Fault Circuit-Interrupters, UL 943.

Exception: A GFCI located in the wall unit of a wall-mounted permanently-connected hair dryer shall comply with the requirements for Class A permanently-connected GFCIs in UL 943.

5.4 If a hand-supported hair-drying appliance is provided with an IDCI, the IDCI shall comply with the Standard for Immersion-Detection Circuit-Interrupters, UL 1664. An IDCI need not provide protection under the condition that any circuit conductor on the line side of the IDCI is open circuited. The combination of the hair dryer and the IDCI shall comply with the requirements specified in Sections 20 and 33 – 35 and 61.9.1 and 65.9.

5.5 If a hand-supported hair-drying appliance is provided with a protective device other than a GFCI or an IDCI, the protective device shall be investigated and determined to be acceptable for the application. Investigation of the protective device shall include, but need not be limited to, consideration of:

a) Electrical rating,

b) Operating temperatures,

c) Reliability of operation,

d) Resistance to the effects of abnormal operating conditions,

UL COPYRIGHTED MATERIAL –
NOT AUTHORIZED FOR FURTHER REPRODUCTION OR
DISTRIBUTION WITHOUT PERMISSION FROM UL
Documents
Document Sharing Hub

Copyright Underwriters Laboratories Inc.
Provided by IHS under license with UL
No reproduction or networking permitted without license from IHS
Not for Resale
Full document details: UL 859 2006

e) Resistance to mechanical abuse,

f) Resistance to electrical transients, and

g) Resistance to moisture.

The combination of hair-drying appliance and protective device shall comply with the test described in the Immersion-Detection Circuit-Interrupter (IDCI) Trip Time Measurement Test, Section 33.

Exception: A protective device is deemed acceptable for the application if it complies with the requirements for Class A cord-connected GFCIs in the Standard for Ground-Fault Circuit-Interrupters, UL 943, except that it is not required to:

a) Have a grounding conductor;

b) Have the same type of power supply cord;

c) Comply with the high-resistance ground faults test under the condition that any power conductor is open-circuited; or

d) Provide grounded neutral protection by compliance with the high-resistance ground faults test, under the test condition that the neutral conductor is grounded at a point in the load circuit.

The combination of a hand-supported hair-drying appliance and such a protective device is not required to be subjected to the test described in the Conductive Coating Test, Section 35.

5.6 A GFCI, IDCI, or other protective device shall be integral with the attachment plug of the hand-supported hair-drying appliance power supply cord.

Exception No. 1: For a wall-mounted permanently-connected hair dryer, the GFCI, IDCI, or other protective device may be located in the wall unit.

Exception No. 2: A GFCI, IDCI, or other protective device may be located in the power supply cord as a through-cord construction or in the hair dryer enclosure, after additional investigations with regard to acceptability after immersion, resistance to mechanical abuse, and similar considerations.

5.7 A user-resettable protective device shall incorporate a supervisory circuit as described in Immersion-Detection Circuit-Interrupters (IDCIs), Section 20, for IDCIs or as described in the Standard for Ground-Fault Circuit-Interrupters, UL 943, for GFCIs.

Exception: A user-resettable protective device may be provided with a reset feature not having a test function based on all of the following:

a) The protective device complies with the Standard for Tests for Safety-Related Controls Employing Solid-State Devices, UL 991. If the computational investigation is conducted, the maximum predicted failure rate (λp) shall not exceed 1.5 failures per million hours predicted. If the demonstrated method is conducted, the test acceleration multiplier shall be 5763.

b) The instructions provided with the appliance alert the user to the reset feature and how and when to use it.

c) The instructions provided with the appliance alert the user to not reset and reuse the appliance should the protective device trip as a result of immersion.

UL COPYRIGHTED MATERIAL –
NOT AUTHORIZED FOR FURTHER REPRODUCTION OR
DISTRIBUTION WITHOUT PERMISSION FROM UL
Documents
Document Sharing Hub

Copyright Underwriters Laboratories Inc.
Provided by IHS under license with UL
No reproduction or networking permitted without license from IHS
Not for Resale
Full document details: UL 859 2006

5.8 A switch included for testing a user resettable protective device shall be permanently marked ″Test ″ and ″Reset ″ on or adjacent to the switch actuators.

5.9 After a protective device de-energizes current-carrying parts, it shall not automatically reset.

5.10 A protective device that is integral with the attachment plug of a hand-supported hair-drying appliance may be provided with a single outlet convenience receptacle when all of the following requirements are met:

a) The convenience receptacle is:

1) Of the same configuration as the attachment plug,

2) Wired on the load side of the protective device, and

3) Wired so that the same polarization as the attachment plug is maintained.

b) The convenience receptacle has a rating of 15 amperes, 125 volts and complies with the Standard for Attachment Plugs and Receptacles, UL 498.

c) The face of a convenience receptacle that is less than 5/8 inch (15.9 mm) wide or 7/8 inch (22.2 mm) long complies with the mounting clearance requirements specified in 21.7.

d) The area surrounding the convenience receptacle is free of any projections that might interfere with full insertion of the blades of an attachment plug having a face size as specified in Figure 5.1.

e) When an attachment plug, as shown in Figure 5.1, is fully inserted into the convenience receptacle, the test and reset buttons of a user-resettable protective device are accessible for testing and resetting the protective device without the use of a tool.

f) The protective device complies with the requirements for cord-connected GFCIs specified in the Standard for Ground-Fault Circuit-Interrupters, UL 943.

Exception No. 1: Flexible cord acceptable for use with hand-supported hair dryers as specified in Table 11.2 may be used.

Exception No. 2: Means for grounding need not be provided.

g) The convenience receptacle contact slots and grounding hole, if any, are located so that the line blades of a grounding-type plug cannot be mated by deliberate manual force, including manipulation, to deflect the grounding pin to the outside of the body of the protective device. An obstruction provided to comply with this requirement is to have minimum size and shape indicated by the shaded area in Figure 5.2. The obstructions are to be coplanar with the face or recessed by no more than 3/32 inch (2.4 mm). Constructions having rigid bodies, which are materials having a minimum hardness of 90 when measured on the ″A″ scale of a Shore Durometer, may have the indicated ″A″ dimensions reduced to 0.531 inch (13.5 mm).

h) The hair dryer immersion protective device complies with the abnormal operation test described in 39.9.1 – 39.9.5.

i) A permanent and legible marking is provided near the convenience receptacle to:

UL COPYRIGHTED MATERIAL –
NOT AUTHORIZED FOR FURTHER REPRODUCTION OR
DISTRIBUTION WITHOUT PERMISSION FROM UL

Documents
Document Sharing Hub

Copyright Underwriters Laboratories Inc.
Provided by IHS under license with UL
No reproduction or networking permitted without license from IHS
Not for Resale
Full document details: UL 859 2006

1) Specify the maximum current and wattage rating of an appliance intended to be plugged into the convenience receptacle as specified in 61.1.7,

2) Indicate that the appliance is to be unplugged immediately after use as specified in 61.10.1, and

3) Indicate that a direct plug-in (cordless) appliance is not to be used as specified in 61.10.1.

j) The instruction manual includes the operating instructions specified in 65.10.

Figure 5.1
Plug-face dimensions for determining acceptable convenience receptacle insertion clearance

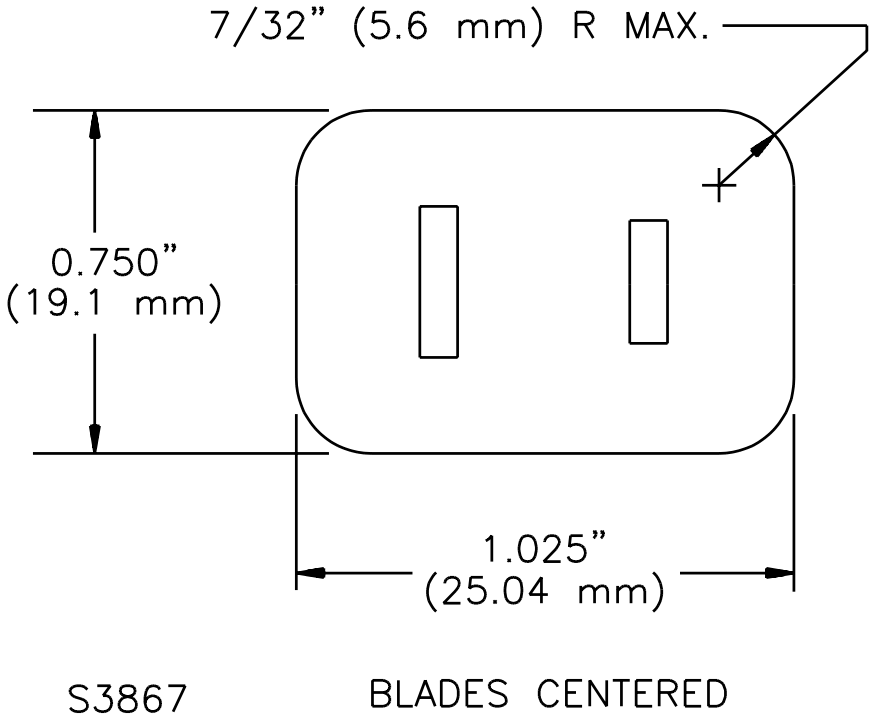

UL COPYRIGHTED MATERIAL –
NOT AUTHORIZED FOR FURTHER REPRODUCTION OR
DISTRIBUTION WITHOUT PERMISSION FROM UL

Documents
Document Sharing Hub

Copyright Underwriters Laboratories Inc.
Provided by IHS under license with UL
No reproduction or networking permitted without license from IHS
Not for Resale
Full document details: UL 859 2006

Figure 5.2
Face of a 15-ampere, 125-volt convenience receptacle showing the smallest acceptable obstruction (shown shaded) for the grounding pin on the mating plug

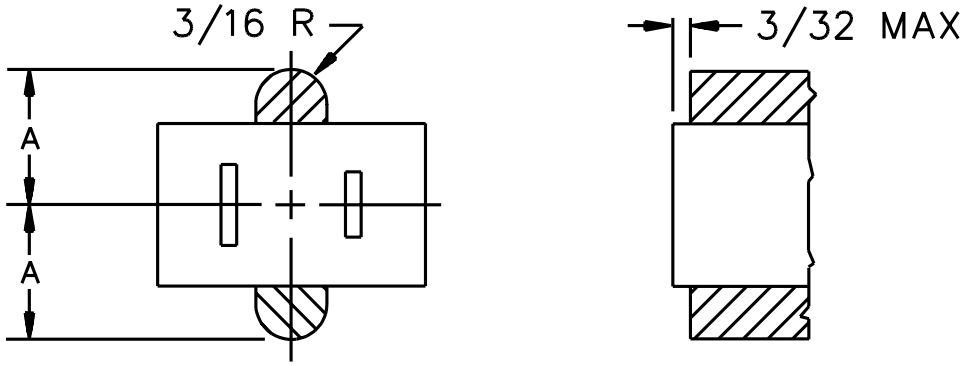

Obstruction for a 2-Pole, 2-Wire (Nongrounding) Receptacle

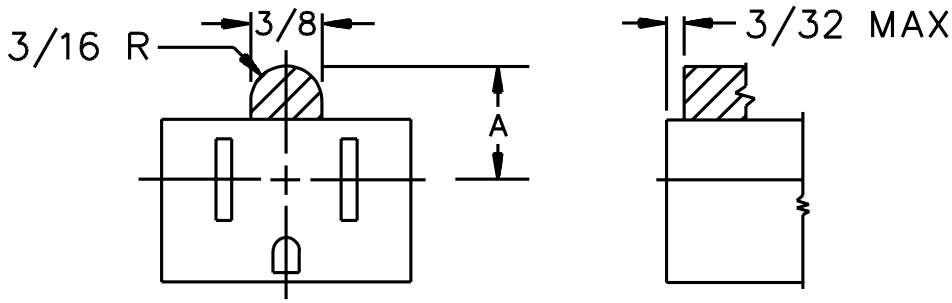

Obstruction for a 2-Pole, 3-Wire (Grounding) Receptacle

Inch	3/32	3/16
mm	2.4	4.8

Dimension A Inch	Dimension A mm	Shore Durometer Hardness (Scale A)
0.625	15.9	less than 90
0.531	13.5	90 or more

S3871

UL COPYRIGHTED MATERIAL –
NOT AUTHORIZED FOR FURTHER REPRODUCTION OR
DISTRIBUTION WITHOUT PERMISSION FROM UL

Documents
Document Sharing Hub

Copyright Underwriters Laboratories Inc.
Provided by IHS under license with UL
No reproduction or networking permitted without license from IHS
Not for Resale
Full document details: UL 859 2006

5.11 With regard to 5.10(f), each output circuit shall be considered if one is not representative of the other. For example, the short circuit test shall be conducted with each output short-circuited one at a time. The dielectric voltage-withstand test between line-connected circuits and load circuits shall include both load circuits. The temperature test shall be conducted with:

a) The hair dryer load circuit and the convenience receptacle each loaded to rated value and

b) The convenience receptacle loaded to 15 amperes with no load connected to the hair dryer load circuit.

6 Frame and Enclosure

6.1 General

6.1.1 The frame and enclosure of an appliance shall be sufficiently strong and rigid to resist the abuses likely to be encountered during service. The degree of resistance inherent in the appliance shall preclude total or partial collapse with the attendant reduction of spacings, loosening or displacement of parts, and other conditions which alone or in combination constitute an increase in the risk of fire, electric shock, or injury to persons.

6.1.2 Among the factors taken into consideration in evaluating an enclosure for acceptability are its:

a) Physical strength,

b) Resistance to impact,

c) Moisture absorptive properties,

d) Combustibility,

e) Resistance to corrosion, and

f) Resistance to distortion at temperatures to which the enclosure may be subjected under conditions of normal or abnormal use.

For a nonmetallic enclosure, all these factors are to be considered with respect to thermal aging.

UL COPYRIGHTED MATERIAL –
NOT AUTHORIZED FOR FURTHER REPRODUCTION OR
DISTRIBUTION WITHOUT PERMISSION FROM UL

Documents
Document Sharing Hub

Copyright Underwriters Laboratories Inc.
Provided by IHS under license with UL
No reproduction or networking permitted without license from IHS
Not for Resale
Full document details: UL 859 2006

6.2 Polymeric enclosures

6.2.1 A polymeric enclosure shall comply with the Standard for Polymeric Materials – Use in Electrical Equipment Evaluations, UL 746C.

Exception: The Abnormal Operation Tests, Section 39, shall be applied in lieu of the abnormal and severe conditions requirements specified in UL 746C. For the polymeric enclosure of an appliance other than a hand-supported hair dryer, the use of HB material may require additional abnormal or severe conditions tests.

6.2.1 revised August 30, 2002

6.3 Metal enclosures

6.3.1 The minimum thickness of a metal enclosure shall be as indicated in Table 6.1.

Table 6.1
Minimum thickness of enclosure metal

Metal	Thickness at small, flat, unreinforced surfaces and at surfaces that are reinforced by curving, ribbing, and the like (or are otherwise of a shape or size) to ensure adequate physical strength,		Thickness at surfaces to which a wiring system is to be connected in the field,		Thickness at relatively large unreinforced flat surfaces,	
	inch	(mm)	inch	(mm)	inch	(mm)
Die-cast	3/64	1.2	–	–	5/64	2.0
Cast malleable iron	1/16	1.6	–	–	3/32	2.4
Other cast metal	3/32	2.4	–	–	1/8	3.2
Uncoated sheet steel	0.026[a]	0.66	0.032	0.81	0.026	0.66
Galvanized sheet steel	0.029[a]	0.74	0.034	0.86	0.029	0.74
Nonferrous sheet metal	0.036[a]	0.91	0.045	1.14	0.036	0.91

[a] Thinner sheet metal may be used if determined to be acceptable when the enclosure is evaluated under considerations such as those specified in 6.1.2.

UL COPYRIGHTED MATERIAL –
NOT AUTHORIZED FOR FURTHER REPRODUCTION OR
DISTRIBUTION WITHOUT PERMISSION FROM UL

Documents
Document Sharing Hub

Copyright Underwriters Laboratories Inc.
Provided by IHS under license with UL
No reproduction or networking permitted without license from IHS
Not for Resale
Full document details: UL 859 2006

6.4 Corrosion resistance

6.4.1 Iron and steel parts shall be made corrosion resistant by painting, galvanizing, plating, or other equivalent means if the malfunction of such unprotected parts would result in a risk of fire, electric shock, or injury to persons.

Exception No. 1: In constructions in which the oxidation of iron or steel due to the exposure of the metal to air and moisture will not be appreciable – thickness of metal and temperature also being factors – surfaces of sheet steel and cast-iron parts within an enclosure not required to be made corrosion resistant.

Exception No. 2: Bearings, lamination, or minor parts of iron or steel, such as washers, screws, and similar parts are not required to be made corrosion resistant.

6.4.2 A container for liquid shall be made resistant to the possible corrosive effect of the liquid intended to be used in the container.

6.5 Accessibility of live parts

6.5.1 An electrical part of an appliance shall be located or enclosed so that unintentional contact with any uninsulated live part and internal wiring will be prevented.

6.5.2 A part of the outer enclosure that is capable of being opened or removed by the user without using a tool (to attach an accessory, to make an operating adjustment, to replace a fuse, or for other reasons) is to be opened or removed when determining compliance with 6.5.1.

6.5.3 The enclosure of an appliance shall have no opening that permits a probe, as illustrated in Figure 6.1, to touch any part that involves a risk of electric shock.

6.5.3 revised June 16, 2004

UL COPYRIGHTED MATERIAL –
NOT AUTHORIZED FOR FURTHER REPRODUCTION OR
DISTRIBUTION WITHOUT PERMISSION FROM UL

Documents
Document Sharing Hub

Copyright Underwriters Laboratories Inc.
Provided by IHS under license with UL
No reproduction or networking permitted without license from IHS
Not for Resale
Full document details: UL 859 2006

Figure 6.1
Articulate probe with web stop

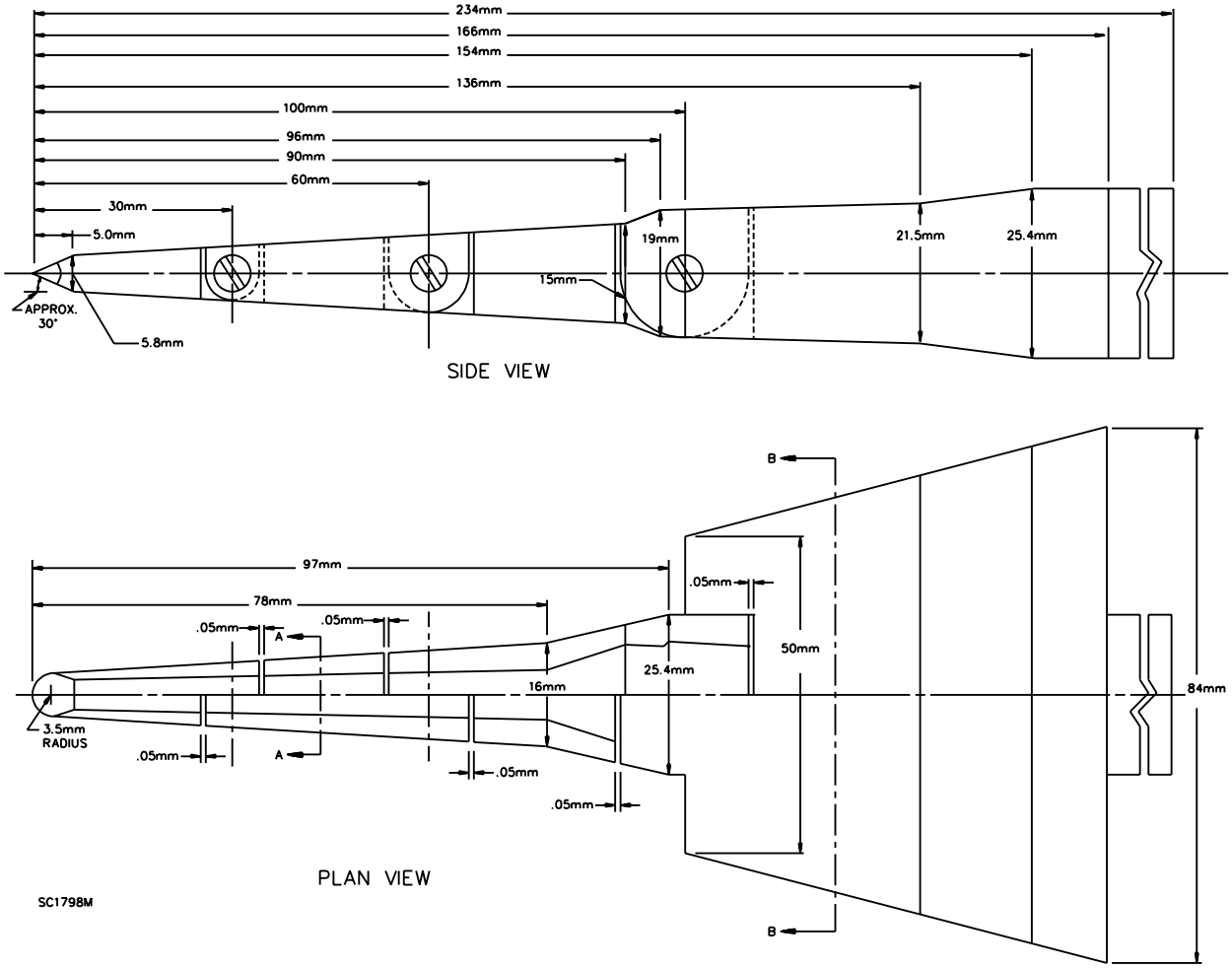

UL COPYRIGHTED MATERIAL –
NOT AUTHORIZED FOR FURTHER REPRODUCTION OR
DISTRIBUTION WITHOUT PERMISSION FROM UL
--`,,```,,,,``-`-`,,`,,`,`,,`---
Documents
Document Sharing Hub
Copyright Underwriters Laboratories Inc.
Provided by IHS under license with UL
No reproduction or networking permitted without license from IHS
Not for Resale
Full document details: UL 859 2006

Figure 6.1 (Cont'd)

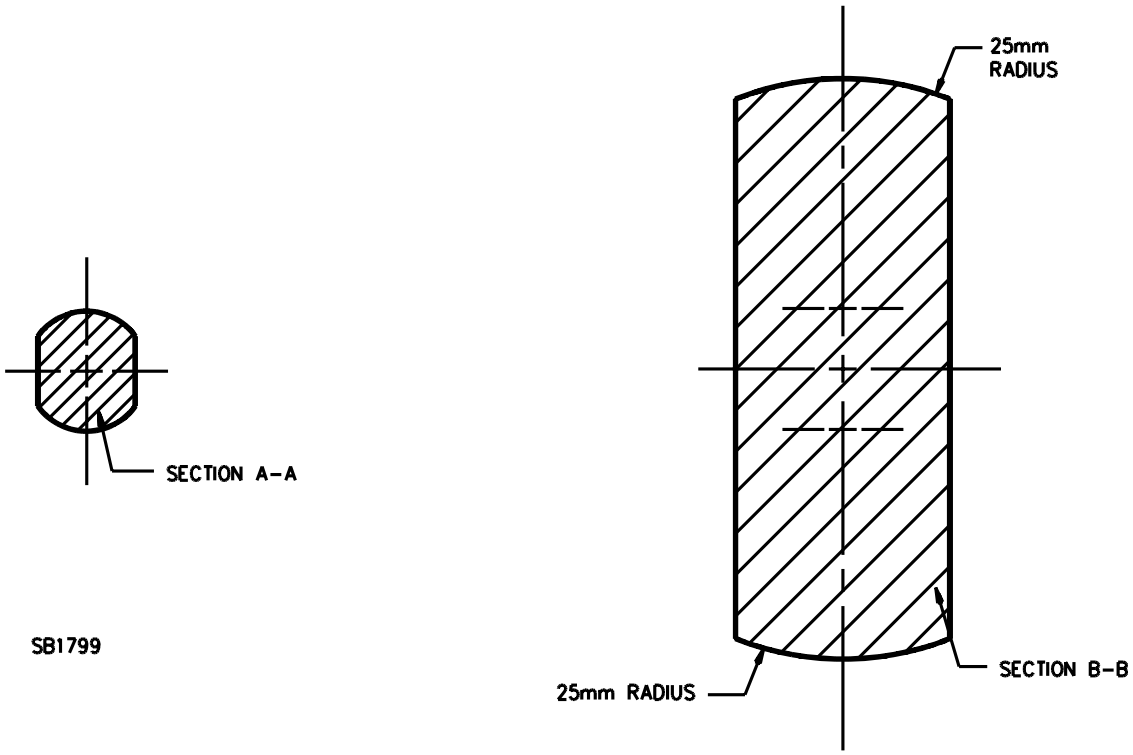

6.5.4 With regard to 6.5.3, the probe is to be articulated into any configuration and rotated or angled to any position before, during, or after insertion into the opening. The penetration shall be to any depth allowed by the opening size, including minimal depth combined with maximum articulation. The probe shall be applied with the minimum force required to determine accessibility and not as an instrument to evaluate the strength of a material.

6.5.4 revised August 30, 2002

6.5.5 An opening that will permit entrance of a 1-inch (25.4-mm) diameter rod is permitted when it complies with the conditions shown in Figure 6.2.

UL COPYRIGHTED MATERIAL –
NOT AUTHORIZED FOR FURTHER REPRODUCTION OR
DISTRIBUTION WITHOUT PERMISSION FROM UL

Documents
Document Sharing Hub

Copyright Underwriters Laboratories Inc.
Provided by IHS under license with UL
No reproduction or networking permitted without license from IHS
Not for Resale
Full document details: UL 859 2006

Figure 6.2
Opening in enclosure

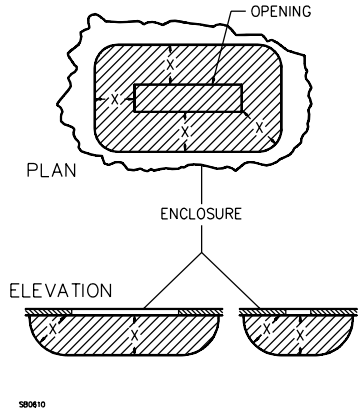

NOTE – The opening is acceptable if, within the enclosure, there is no uninsulated live part or film-coated wire:

a) Less than X distance from the perimeter of the opening, as well as

b) Within the volume generated by projecting the perimeter X distance normal to its plane.

X equals five times the diameter of the largest diameter rod that can be inserted through the opening, but not less than 6-1/16 inches (154 mm).

6.5.6 A live part of a limited-energy circuit requires the same degree of protection against unintentional contact as a live part of a line voltage circuit.

6.5.7 Insulated brush caps do not require additional enclosure.

6.5.8 An area of an enclosure that is provided with a group of openings or with a guarded opening (such as a grille, louver, or screen) is to be subjected to the strength of enclosure test described in 28.1.

6.5.9 The enclosure of a remotely or automatically controlled appliance shall reduce the risk of molten metal, burning insulation, or flaming particles, from falling on combustible materials, including the surface upon which the appliance is supported.

6.5.10 The requirement in 6.5.9 will necessitate the use of a barrier of material that is resistant to combustion:

a) Under a motor unless:

1) The structural parts of the motor or of the appliance provide the equivalent of such a barrier;

2) The protection provided with the motor is such that no burning insulation or molten material falls to the surface that supports the appliance when the motor is energized under each of the following fault conditions:

i) Main winding opened;

UL COPYRIGHTED MATERIAL –
NOT AUTHORIZED FOR FURTHER REPRODUCTION OR
DISTRIBUTION WITHOUT PERMISSION FROM UL
Documents
Document Sharing Hub

Copyright Underwriters Laboratories Inc.
Provided by IHS under license with UL
No reproduction or networking permitted without license from IHS
Not for Resale
Full document details: UL 859 2006

ii) Starting winding opened;

iii) Starting switch short-circuited; and

iv) For a permanent split capacitor motor, the capacitor short-circuited (the short circuit is to be applied before the motor is energized, and the rotor is to be locked);

or

3) The motor is provided with a thermal motor protector (a protective device that is sensitive to temperature and current) that will prevent the temperature of the motor windings from exceeding 125°C (257°F) under the maximum load under which the motor will run without causing the protector to cycle, and from exceeding 150°C (302°F) with the rotor of the motor locked.

b) Under wiring, unless it is neoprene- or thermoplastic-insulated.

6.5.11 The requirement in 6.5.9 will also necessitate that a switch, relay, solenoid, or the similar part be individually and completely enclosed unless there is no opening in the bottom of the appliance enclosure, or it can be shown that malfunction of the component would not result in a risk of fire.

Exception: Terminals of a switch, relay, solenoid, or the like are not required to be individually and completely enclosed.

6.5.12 The barrier specified in 6.5.10 shall be horizontal, shall be located as indicated in Figure 6.3, and shall have an area no less than that described in Figure 6.3. An opening such as for drainage or ventilation, is permitted in the barrier if such an opening would not permit molten metal, burning insulation, or flaming particles to fall on combustible material.

UL COPYRIGHTED MATERIAL –
NOT AUTHORIZED FOR FURTHER REPRODUCTION OR
DISTRIBUTION WITHOUT PERMISSION FROM UL

Documents
Document Sharing Hub

Copyright Underwriters Laboratories Inc.
Provided by IHS under license with UL
No reproduction or networking permitted without license from IHS
Not for Resale
Full document details: UL 859 2006

Figure 6.3
Location and extent of barrier

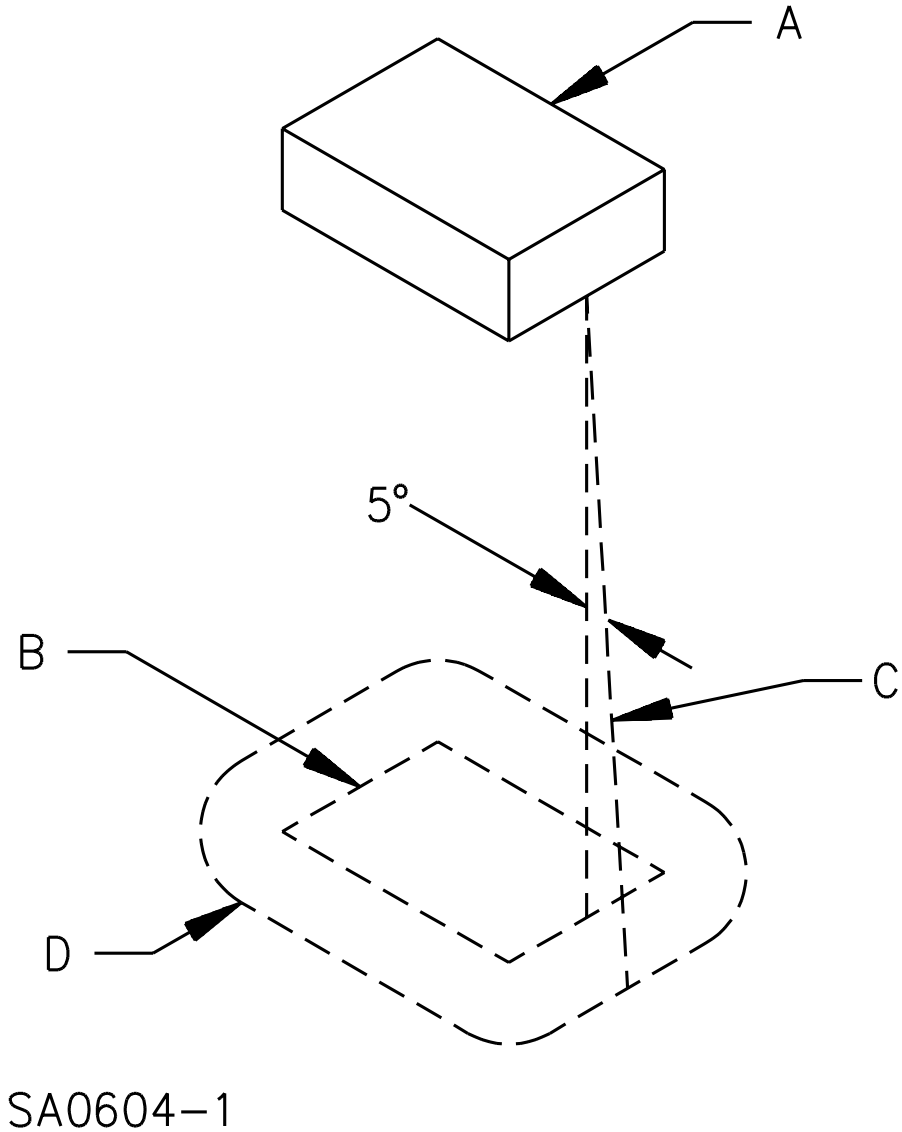

A – Region to be shielded by barrier. This will consist of the entire component if it is not otherwise shielded, and will consist of the unshielded portion of a component which is partially shielded by the component enclosure or equivalent.

B – Projection of outline of component on horizontal plane.

C – Inclined line which traces out minimum area of barrier. When moving, the line is always:

1) Tangent to the component,

2) 5 degrees from the vertical, and

3) Oriented so that the area traced out on a horizontal plane is maximum.

D – Location (horizontal) and minimum area for barrier. The area is that included inside the line of intersection traced out by the inclined line C and the horizontal plane of the barrier.

UL COPYRIGHTED MATERIAL –
NOT AUTHORIZED FOR FURTHER REPRODUCTION OR
DISTRIBUTION WITHOUT PERMISSION FROM UL

Documents
Document Sharing Hub

Copyright Underwriters Laboratories Inc.
Provided by IHS under license with UL
No reproduction or networking permitted without license from IHS
Not for Resale
Full document details: UL 859 2006

6.6 Doors and covers

6.6.1 The door or cover of an enclosure shall be provided with means for holding it in the closed position.

6.6.2 The door or cover of an enclosure shall be hinged (or similarly attached) if it gives access to any overload protective device, the functioning of which requires renewal, or if it is necessary to open the cover in connection with the operation of the protective device. Such a door or cover shall be provided with a latch or similar device and shall be tight-fitting or shall overlap the surface of the enclosure around the opening.

7 Reduction of Risk of Injury to Persons

7.1 General

7.1.1 Materials that are relied upon to reduce the risk of injury to persons shall have such properties as to meet the demand of intended loading conditions.

7.1.2 Asbestos shall not be used.

7.1.3 A moving part that can result in a risk of injury to persons shall be enclosed or provided with other means to reduce unintentional contact.

7.1.4 With respect to the requirement specified in 7.1.3, the construction and intended use of the appliance are to be considered in investigating a guard or enclosure. Among the factors to be evaluated in evaluating the acceptability of an exposed moving part are:

a) The degree of exposure;

b) The sharpness of the moving part; and

c) The possibility of fingers, arms, hair, or clothing being drawn into the moving part (such as at points where gears mesh, where belts travel onto a pulley, or where moving parts close in a pinching or shearing action).

7.1.5 An appliance, or any item furnished with an appliance, shall have no sharp edge, burr, point, or spike inside or outside the appliance that results in injury to persons during intended use and maintenance.

7.1.6 On an appliance adjustable for height, means shall be provided for holding the upper parts securely in position. Means shall also be provided to prevent the upper part from descending rapidly if the securing means loosens or fails to operate as intended.

7.1.7 A hand-supported hair dryer shall have each air intake opening provided with a screen or equivalent means so that there are no openings larger than 0.004 square inch (0.03 cm^2).

UL COPYRIGHTED MATERIAL –
NOT AUTHORIZED FOR FURTHER REPRODUCTION OR
DISTRIBUTION WITHOUT PERMISSION FROM UL

Documents
Document Sharing Hub

Copyright Underwriters Laboratories Inc.
Provided by IHS under license with UL
No reproduction or networking permitted without license from IHS
Not for Resale
Full document details: UL 859 2006

7.2 Appliances with reservoirs

7.2.1 An appliance in which liquid reaches a temperature greater than 46°C (114.8°F) shall comply with the requirements specified in 7.2.2 – 7.2.4, 29.1 – 29.3, and 30.2.

Exception No. 1: An electrode-type appliance is not required to comply with these requirements. For requirements for an electrode-type appliance, see Sections 67 – 73.

Exception No. 2: A wax depilatory appliance is not required to comply with the requirements specified in 7.2.3, 7.2.4, and 29.1 – 29.3.

7.2.2 The construction of the appliance shall reduce the risk of injury to persons under conditions of intended use. Openings through which liquid can be emitted shall not be provided unless such openings are needed to perform an operating function.

7.2.3 An appliance with a vessel or container with a capacity of more than 32 fluid ounces (946 mL) shall be provided with a fully inserting or a lock-on lid.

7.2.4 If any part of an appliance requires assembly (for example, engagement of a twist-lock part), then improper assembly that results in a risk of injury to persons shall be clearly visible to the user.

7.3 Wax depilatory appliances

7.3.1 The maximum temperature of the wax, measured as described in 37.2.1 – 37.2.3, shall not exceed 75°C (167°F).

7.3.2 The maximum temperature rise of surfaces that may be contacted by the user shall be as specified in Table 37.2.

7.3.3 When there are multiple heat settings (for example, a setting for maintaining molten wax at the intended temperature for application to all of the skin and a higher heat setting for quick melting of solid wax), the appliance shall comply with all of the following:

a) If the wax is capable of being heated above 75°C (167°F) for quick melting, the reservoir in which the wax is so heated shall be provided with a nonremovable, self-closing lid or cover.

b) A visible overheat condition indicator shall be provided. Such an indicator shall indicate when the wax temperature exceeds 75°C. This indicator shall be separate and independent of any other temperature indicator (for example, an indicator light whose functioning depends upon the setting of an adjustable thermostat) which may be provided. See 37.2.3, 63.7(l)(12), and 65.8(e).

c) A marking (such as a number or symbol) shall be provided adjacent to each heat selector position. A permanent marking shall be provided on the appliance in accordance with 61.8.1(b), and the Use and Care Instructions shall warn the user against applying wax that has been heated at a setting higher than the intended setting [see 63.7(l)(12)].

d) A part of a temperature control that is user-operated (an adjustment knob or similar part) shall be constructed so that deliberate and positive action by the operator is required to select a heat setting or to change from one heat setting to another. A construction that requires two separate and distinct motions by the user (such as push and turn) is an example of a control that complies with this requirement.

UL COPYRIGHTED MATERIAL –
NOT AUTHORIZED FOR FURTHER REPRODUCTION OR
DISTRIBUTION WITHOUT PERMISSION FROM UL
Documents
Document Sharing Hub
Copyright Underwriters Laboratories Inc.
Provided by IHS under license with UL
No reproduction or networking permitted without license from IHS
Not for Resale
Full document details: UL 859 2006

7.3.4 With reference to 7.3.3(a), a nonremovable cover is one which requires special tools (tools not available to other than service personnel) for removal. A self-closing cover is a cover that returns to its fully closed position without any action on the part of the user other than releasing it from any opened position while the appliance is supported by a flat, horizontal surface.

7.3.5 In accordance with 39.8.5 and 65.8, if the malfunction of a temperature-regulating control increases the application temperature of the wax above 75°C (167°F), visible means, such as an indicator light, shall be provided to inform the user of an overheat condition.

Exception: A visible overheat condition indicator is not required if a thermal cutoff or a trip-free manual-reset thermostat operates upon short-circuiting of the temperature-regulating control. The temperatures attained by the wax, and surfaces of the appliance that are handled or contacted by the user during intended use, at the time the thermal cutoff or thermostat opens shall not present a risk of burn as determined by an appropriate investigation. The investigation shall include consideration of the length of time that temperatures remain above the specified limits, the thermal inertia of the materials involved, and similar factors.

8 Mechanical Assembly

8.1 An appliance that involves a motor or other vibrating part shall be assembled such that the appliance will not be affected adversely by the vibration. Brush caps shall be tightly threaded or otherwise constructed to prevent loosening.

8.2 A switch (other than a through-cord switch), lampholder, receptacle, motor-attachment plug, or similar component shall be mounted securely and shall be prevented from turning.

Exception No. 1: Turn-prevention means for a switch are not required, when all the following conditions are met:

a) The switch is of the plunger or other type that does not tend to rotate when operated (a toggle switch is subject to forces that tend to rotate the switch during intended operation of the switch);

b) The means of mounting the switch is such that the operation of the switch will not result in the switch becoming loosened;

c) The spacings are not reduced below the minimum required values, if the switch does rotate; and

d) Intended operation of the switch is by mechanical means rather than by direct contact by persons.

Exception No. 2: A lampholder in which the lamp cannot be replaced (such as a neon pilot or indicator light in which the lamp is sealed in by a nonremovable jewel) is not required to be prevented from turning if the rotation cannot reduce spacings below the minimum required values.

UL COPYRIGHTED MATERIAL –
NOT AUTHORIZED FOR FURTHER REPRODUCTION OR
DISTRIBUTION WITHOUT PERMISSION FROM UL

Documents
Document Sharing Hub

Copyright Underwriters Laboratories Inc.
Provided by IHS under license with UL
No reproduction or networking permitted without license from IHS
Not for Resale
Full document details: UL 859 2006

8.3 Friction alone shall not be relied on for turn-prevention as required in 8.2. A lock-washer, applied as intended, is a reliable means of turn-prevention of a device with a single-hole mounting means.

8.4 A positive means shall be provided to prevent parts of an appliance from turning with respect to each other if such turning would result in reduction of spacings, twisting of wires, and the like.

Exception: If such parts depend upon 3/8 inch (9.5 mm) or larger pipe threads, no additional means to prevent turning need be provided.

8.5 A fastener that secures the insulating tip of a curling iron, a heated brush, or a similar appliance shall be constructed, fastened, or located so as to prevent the fastener from becoming loosened if such loosening can result in a risk of fire or electric shock.

8.6 Compliance with the requirement specified in 8.5 may be accomplished by use of:

a) Staked and upset screws,

b) Screws with properly applied lock washers,

c) Press fitting of the insulating tip into place, or

d) Other equivalent means.

A polymeric material relied upon to prevent the fasteners from loosening shall have the required mechanical strength, resistance to heat, and dimensional stability. All of these properties are to be considered with respect to thermal aging.

8.7 If any part of a metal spring of a hair clamp of a curling iron or a similar appliance can become loose inside the enclosure of electrical parts as a result of breakage of the spring, the construction shall be such that electrical spacings will not be reduced.

8.8 Compliance with the requirement specified in 8.7 may be accomplished by

a) Locating all parts of the spring outside the enclosure of electrical parts,

b) Using barriers,

c) Using physical restraints, or

d) Using other equivalent means.

8.9 The temperature sensor of a temperature controller, a thermostat, a thermal cutoff, or a similar device shall be secured in place.

UL COPYRIGHTED MATERIAL –
NOT AUTHORIZED FOR FURTHER REPRODUCTION OR
DISTRIBUTION WITHOUT PERMISSION FROM UL

Documents
Document Sharing Hub

Copyright Underwriters Laboratories Inc.
Provided by IHS under license with UL
No reproduction or networking permitted without license from IHS
Not for Resale
Full document details: UL 859 2006

9 Stability

9.1 A floor- or counter-supported appliance shall be constructed such that it will not be overturned when tested in accordance with 30.1.

Exception: An appliance whose overturning during intended use will not present a risk of burns or injury to persons need not be tested.

9.2 With regard to 9.1, a hand-supported hair dryer provided with a stand for conversion into a counter-supported hair dryer is to be evaluated as a hand-supported appliance and is not to be subjected to the stability test.

9.3 A wax depilatory appliance shall be tested and the results shall be evaluated as described in 30.2, except that the wax may be in any combination of solid and liquid states anticipated during the intended operation of the appliance. Any movable parts or covers are to be in the positions that result in the most adverse conditions of use.

Exception: The test need not be conducted on a construction for which there is no possibility of molten wax spilling from its container under any condition of use, such as constructions in which the wax material is contained within completely enclosed wax applicators.

10 Hanging and Mounting Means

10.1 A wall-hung or a wall-mounted appliance shall withstand a force as described in 51.1 without evidence of damage to the mounting surface, to the hanging means, to the mounting means, or to the appliance that results in the risk of electric shock, fire, or injury to persons.

10.2 A cord-connected appliance that is provided with keyhole slots, notches, hanger holes, or similar feature, for hanging the appliance on a wall, shall be:

a) Provided with the necessary hardware for hanging the appliance in accordance with the installation instructions and

b) Constructed in such a manner that the hanging means (such as screws) shall not be accessible without removing the appliance from the supporting means.

10.3 When determining compliance with 10.2, any part of the enclosure or barriers that can be removed without the use of tools to gain access to the hanging means is to be removed.

10.4 A keyhole slot, notch, or hanger hole shall be located so that the supporting screws or similar hardware cannot damage any electrical insulation or reduce spacings to current-carrying parts of the appliance.

10.5 A permanently installed wall-mounted appliance shall be provided with the necessary hardware for mounting in accordance with the installation instructions.

Exception: Small parts commonly available for the mounting of the appliance need not be provided if the installation instructions refer to such parts as specified in 64.4.

UL COPYRIGHTED MATERIAL –
NOT AUTHORIZED FOR FURTHER REPRODUCTION OR
DISTRIBUTION WITHOUT PERMISSION FROM UL

Documents
Document Sharing Hub

Copyright Underwriters Laboratories Inc.
Provided by IHS under license with UL
No reproduction or networking permitted without license from IHS
Not for Resale
Full document details: UL 859 2006

11 Supply Connections

11.1 Permanently-connected appliances

11.1.1 An appliance intended for permanent connection to a power supply, either by being fastened in place, located in a dedicated space, or both, shall have provision for connection of one of the wiring systems that is acceptable for the appliance.

Exception: If an appliance is not intended for permanent connection to a power supply, but is intended to be either fastened in place, located in a dedicated space, or both, it may be provided with a short length of flexible cord in accordance with 11.3.1.1 – 11.3.1.3 and 11.3.1.6 and with an attachment plug for supply connection. The investigation of such a feature will include consideration of the utility of the appliance and the reasons for having it detachable from its supply source by means of the attachment plug.

11.1.2 The location of a terminal box or compartment in which a power supply connection to a permanently-connected appliance is to be made shall be such that the connection may be readily inspected after the appliance is installed as intended.

11.1.3 A terminal compartment intended for the connection of a supply raceway shall be attached to the appliance so as to be prevented from turning.

11.2 Wiring terminals

11.2.1 An appliance intended for permanent connection to the power supply shall be provided with wiring terminals or leads for connection of supply circuit conductors. Such wiring terminals or leads shall accommodate conductors having an ampacity of not less than 125 percent of the appliance current rating when the load is continuous (3 hours or more), and not less than the appliance current rating when the load is intermittent.

11.2.2 For the purpose of these requirements, wiring terminals are considered to be terminals to which power supply or control connections will be made in the field when the appliance is installed.

11.2.3 A wiring terminal shall be provided with a soldering lug or with a pressure terminal connector securely fastened in place (for example, firmly bolted or held by a screw).

Exception: A wire-binding screw may be used at a wiring terminal intended to accommodate a No. 10 AWG (5.3 mm^2) or smaller conductor if upturned lugs or the equivalent are provided to hold the wire in position.

11.2.4 A wiring terminal shall be prevented from turning or shifting in position by means other than friction between surfaces. This may be accomplished by two screws or rivets; by square shoulders or mortices; by a dowel pin, lug, or offset; by a connecting strap or clip fitted into an adjacent part; or by an equivalent means.

11.2.5 A wire-binding screw at a wiring terminal shall be no smaller than No. 10 (4.8 mm).

Exception: A No. 8 (4.2 mm) screw may be used at a terminal intended only for the connection of a No. 14 AWG (2.1 mm^2) conductor, and a No. 6 (3.5 mm) screw may be used for the connection of a No. 16 AWG (1.3 mm^2) or No. 18 AWG (0.82 mm^2) control-circuit conductor.

UL COPYRIGHTED MATERIAL –
NOT AUTHORIZED FOR FURTHER REPRODUCTION OR
DISTRIBUTION WITHOUT PERMISSION FROM UL

Documents
Document Sharing Hub

Copyright Underwriters Laboratories Inc.
Provided by IHS under license with UL
No reproduction or networking permitted without license from IHS
Not for Resale
Full document details: UL 859 2006

11.2.6 A terminal plate tapped for a wire-binding screw shall be of metal not less than 0.050 inch (1.27 mm) thick. There shall be two or more full threads in the metal, which may be extruded if necessary to provide the threads.

Exception: A plate less than 0.050 inch thick, but not less than 0.030 inch (0.762 mm) thick, is acceptable if the tapped threads are determined to have equivalent mechanical strength.

11.2.7 Upturned lugs or a cupped washer shall be capable of retaining a conductor of the size specified in 11.2.1, but not smaller than No. 14 AWG (2.1 mm^2), under the head of the screw or the washer.

11.2.8 A wire-binding screw shall thread into metal.

11.2.9 An appliance intended for connection to a grounded power supply conductor and using a:

a) Lampholder or element holder of the Edison screw shell type,

b) Single pole switch, or

c) Single pole automatic control

shall have one terminal or lead intended for connection of the grounded conductor of the supply circuit. The terminal or lead intended for grounded connection shall be the one that is connected to the screw shell of a lampholder or element holder and that has no connection to a single pole switch or single pole automatic control.

Exception: With regard to connection of a single pole automatic control, the requirements specified in 23.1 shall apply.

11.2.10 A terminal intended for the connection of a grounded circuit conductor shall be made of, or plated with, a metal substantially white in color and shall be readily distinguishable from the other terminals. If not of such metal, the identification of that terminal shall be clearly shown in some other manner, such as on an attached wiring diagram. A lead intended for the connection of a grounded circuit conductor shall be finished to show a white or gray color and shall be readily distinguishable from the other leads.

11.2.11 The free length of a lead inside an outlet box or wiring compartment shall be 6 inches (152.4 mm) or more if the lead is intended for field connection to an external circuit.

Exception: A lead may be less than 6 inches long if it is evident that the use of a longer lead will result in a risk of fire, electric shock, or injury to persons.

11.2.12 The surface of an insulated lead intended solely for the connection of an equipment-grounding conductor shall be green, with or without one or more yellow stripes, and no other lead shall be so identified.

11.2.13 A wire-binding screw intended for the connection of an equipment grounding conductor shall have a green colored head that is hexagonal shaped, slotted, or both. A pressure wire connector shall be plainly identified as such by being marked ″G,″ ″GR,″ ″GND,″ ″Grounding,″ or the like or by a marking on the wiring diagram provided on the appliance. The wire-binding screw or pressure wire connector shall be located so that it is unlikely to be removed during servicing of the appliance.

UL COPYRIGHTED MATERIAL –
NOT AUTHORIZED FOR FURTHER REPRODUCTION OR
DISTRIBUTION WITHOUT PERMISSION FROM UL

Documents
Document Sharing Hub

Copyright Underwriters Laboratories Inc.
Provided by IHS under license with UL
No reproduction or networking permitted without license from IHS
Not for Resale
Full document details: UL 859 2006

11.2.14 A terminal solely for connection of an equipment grounding conductor shall be capable of securing a conductor of the correct size for that purpose.

11.3 Cord-connected appliances

11.3.1 Cords and plugs

11.3.1.1 An appliance shall be provided with a length of flexible cord in accordance with Table 11.1 and an attachment plug for connection to the supply circuit. A coiled cord shall not be used with a floor- or counter-supported appliance where such use would present a risk of burn, fire, electric shock, or injury to persons (for example, the appliance being pulled off a table by the force of the cord). The cord length is measured from the point of cord entry into the enclosure, or into the wiring device at the appliance end of the cord, to the face of the attachment plug. The length for a coiled cord is to be measured with the cord in an uncoiled position.

Exception: When a power supply cord contains a right-angle attachment plug, the cord length shall be measured from the point of cord entry into the enclosure, or into the wiring device at the appliance end of the cord, to the edge of the line blades or grounding pin nearest the point of cord entry into the attachment plug as shown in Figure 11.1.

11.3.1.1 revised August 30, 2002

Table 11.1
Cord lengths for specific conditions

Type of appliance	Cord length			
	Minimum,		Maximum,	
	feet	(m)	feet	(m)
Appliance supported by hand or by table or counter top	5	1.52	9	2.74
Wall-hung appliances with attached appliance supported by hand	5[a]	1.52	9[a]	2.74
	2[b]	0.61	3[b]	0.91
Appliance usually supported by head, shoulder, or back	6	1.83	12	3.66
Any appliance having a jacketed cord	See note[c]		Not specified	

[a] Between wall unit and hand unit.
[b] Between wall unit and receptacle.
[c] As specified elsewhere in this table or in 11.3.1.1.

UL COPYRIGHTED MATERIAL –
NOT AUTHORIZED FOR FURTHER REPRODUCTION OR
DISTRIBUTION WITHOUT PERMISSION FROM UL
Documents
Document Sharing Hub

Copyright Underwriters Laboratories Inc.
Provided by IHS under license with UL
No reproduction or networking permitted without license from IHS
Not for Resale
Full document details: UL 859 2006

Figure 11.1
Power supply cord length measurement for right angle attachment plugs

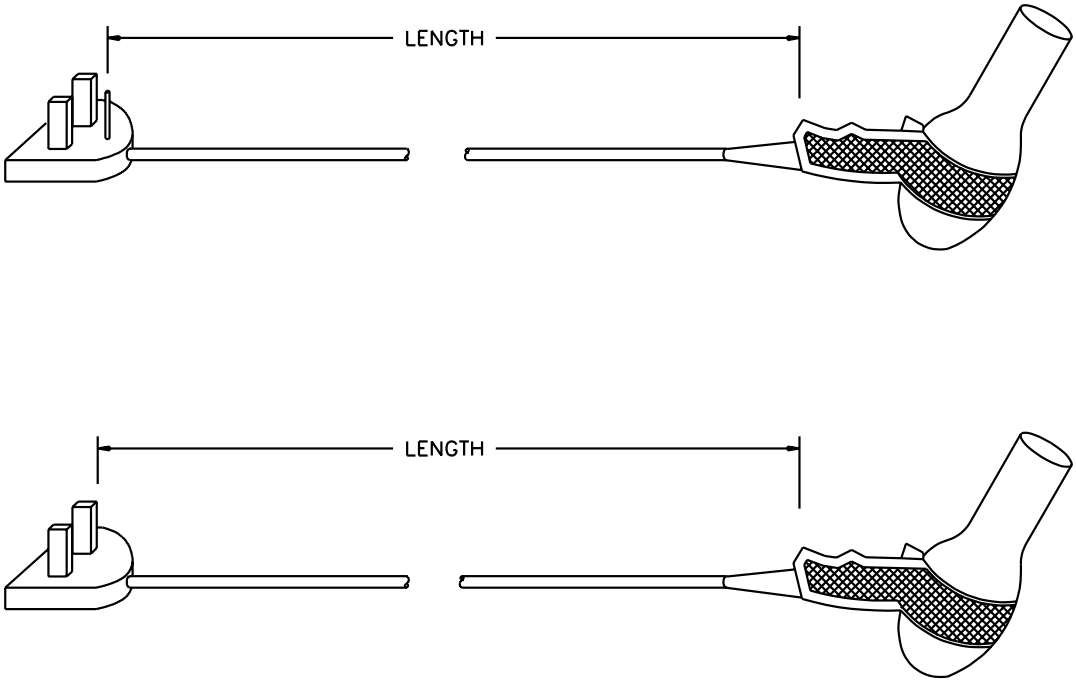

11.3.1.2 The flexible cord:

a) May be permanently attached to the appliance or

b) For other than a hand-supported appliance, may be in the form of a detachable power supply cord with means for connection to the appliance.

Examples of the means for connection are an appliance plug, a flatiron plug, or a cord connector cooperating with pin or blade terminals on the appliance.

11.3.1.3 The ampacity of the cord and of the plug shall not be less than the current rating of the appliance. The cord and the plug voltage rating shall be at least equal to the rated voltage of the appliance.

11.3.1.4 With respect to 11.3.1.3, the voltage rating of a dual voltage appliance is deemed to be that to which the appliance is set when it is shipped from the factory.

11.3.1.5 If a dual-voltage appliance is provided with an adapter for connection to an alternate supply source, the adapter shall comply with the applicable requirements in the Standard for Attachment Plugs and Receptacles, UL 498.

UL COPYRIGHTED MATERIAL –
NOT AUTHORIZED FOR FURTHER REPRODUCTION OR
DISTRIBUTION WITHOUT PERMISSION FROM UL
Documents
Document Sharing Hub
Copyright Underwriters Laboratories Inc.
Provided by IHS under license with UL
No reproduction or networking permitted without license from IHS
Not for Resale
Full document details: UL 859 2006

11.3.1.6 The flexible cord shall be of a type indicated in Table 11.2 or the equivalent.

Table 11.2
Required types of cord and applicable limitations on their use

Appliance on which the cord is to be used	Required cords where temperatures higher than 121°C (250°F) are attained on any surface the cord can touch	Required cords where 121°C (250°F) or lower temperatures are attained on any surface the cord can touch
Floor supported	HPN[a], HSJ, HSJO, HS, kHSO	SP-2[a], SPE-2[a], SPT-2[a], SV[a], SVE[a], SVO[a], SVOO[a], SVT[a], SVTO[a], SVTOO[a] SJ, SJE, SJO, SJOO, SJT, SJTO, SJTOO, S, SE, SO, SOO, ST, STO, STOO
Hand-supported hair dryers, heated air curling irons and brushes, and, except as noted in Note (b), counter-supported appliances	HPD, HPN, HSJ, HSJO	SP-2, SPE-2, SPT-2, SV, SVE, SVO, SVOO, SVT, SVTO, SVTOO, SJ, SJE, SJO, SJOO, SJT, SJTO, SJTOO, SP-1[b], SPE-1[b], SPT-1[b]
Facial saunas	–	SP-1, SPE-1, SPT-1
Combs	SP-2, SPE-2 or SPT-2, HPN	SP-2, SPE-2 or SPT-2, HPN
Curling irons and brushes, manicure and pedicure sets, hair crimping and hair straightening irons, and similar hand-supported appliances	TPT[c], SPT-1, XT[d], HPD	TPT[c], SP-1, SPE-1, SPT-1, XT[d], HPD

[a] Acceptable if the following conditions are met:

1) The unit is not provided with rollers, castors, or similar parts, and

2) The point of cord entry to the unit is at least 3 feet (0.91 m) above the floor with the unit in any operating configuration.

[b] Acceptable on counter-supported appliances weighing 1/2 pound (0.23 kg) or less. The weight is to be determined without the power supply cord.

[c] Acceptable for use with appliances rated 50 watts or less and weighing 1/2 pound (0.23 kg) or less. The weight is to be determined without the power supply cord.

[d] Minimum No. 20 AWG (0.52 mm^2) parallel 2-conductor construction required.

11.3.1.7 The attachment plug of a cord-connected appliance, and the integral blades of a direct plug-in appliance, provided with a 15- or 20-ampere general-use receptacle shall be of the 3-wire grounding type. The attachment plug and the integral blades of all other cord-connected and direct plug-in appliances provided with either a line-connected, single-pole on-off switch or overcurrent protective device, or an Edison-base lampholder shall be polarized or of the grounding type.

11.3.1.8 When a 3-wire grounding-type attachment plug or a 2-wire polarized attachment plug is provided, the attachment plug connections shall comply with Figure 11.2 and the polarity identification of the flexible cord shall comply with Table 11.3.

UL COPYRIGHTED MATERIAL –
NOT AUTHORIZED FOR FURTHER REPRODUCTION OR
DISTRIBUTION WITHOUT PERMISSION FROM UL

Documents
Document Sharing Hub

Copyright Underwriters Laboratories Inc.
Provided by IHS under license with UL
No reproduction or networking permitted without license from IHS
Not for Resale
Full document details: UL 859 2006

Figure 11.2
Connection to attachment plug

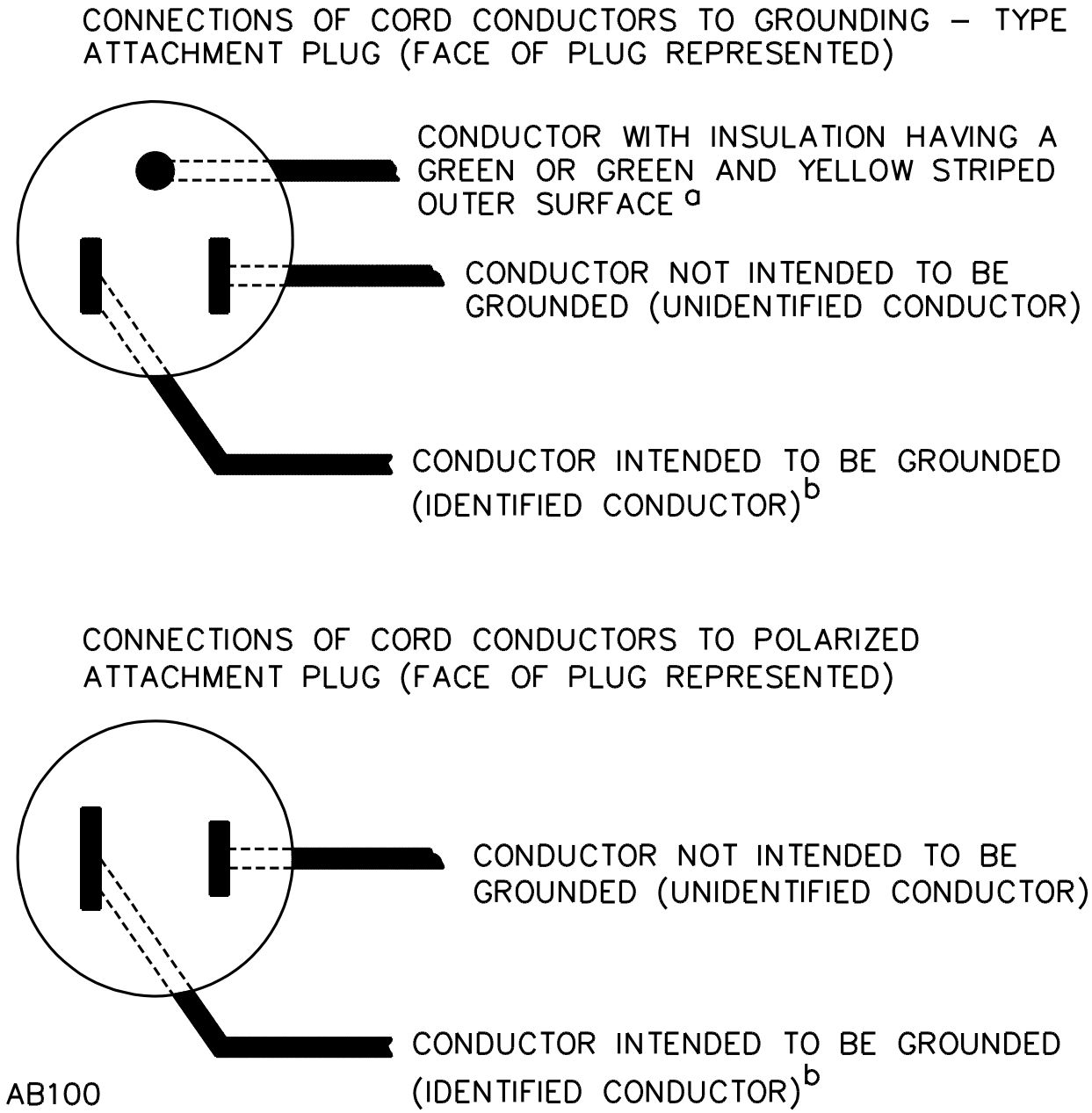

[a] In the above illustration, the blade to which the green conductor is connected may have a U-shaped or a circular cross section.

[b] Signifies a conductor identified in accordance with Table 11.3.

UL COPYRIGHTED MATERIAL –
NOT AUTHORIZED FOR FURTHER REPRODUCTION OR
DISTRIBUTION WITHOUT PERMISSION FROM UL

Documents
Document Sharing Hub

Copyright Underwriters Laboratories Inc.
Provided by IHS under license with UL
No reproduction or networking permitted without license from IHS
Not for Resale
Full document details: UL 859 2006

Table 11.3
Polarity identification of flexible cords

Method of polarity identification	Required combinations	
	Wire intended to be grounded[a]	All other wires[a]
Colored braid	Solid white or gray	Solid color other than white or gray
Tracer in braid	Solid white or gray braid with no tracer in braid[b] Colored tracer in braid of a color other than white or gray	Solid white or gray braid with a colored tracer in braid[b] No tracer in braid of solid color other than white or gray
Colored insulation[c]	Solid white or gray Light blue[d]	Solid color other than white or gray Solid color other than light blue, white, or gray[d]
Colored separator[e]	White or gray	Color other than white or gray
Tinned conductors[f]	Tin or other white metal on all strands of the conductor	No tin or other white metal on the strands of the conductor
Surface marking[e]	One or more stripes, ridges, or grooves, or a combination of these on the exterior surface of the cord	

[a] A conductor having insulation finished to show a green color with or without one or more straight or helical unbroken yellow stripes or having a green braid with or without one or more yellow tracers is to be used only as an equipment grounding conductor. See also 25.4 for the description of an equipment grounding conductor and Figure 11.2 for the connection of conductors to attachment plugs.
[b] Only for Types C and PD cords.
[c] Only for a cord having no braid on any individual conductor.
[d] Only for a cord having a jacket that is not integral with the circuit conductor insulation.
[e] Only for Types SP-1, SP-2, SPE-1, SPE-2, SPT-1, and SPT-2 cords.
[f] Only for Types SPT-1 and SPT-2 cords.

11.3.1.9 Type SPT-2, SVT, or SVTO flexible cord may be used for connecting a pendant-type on-off switch, a temperature control, or both to a table- or floor-supported hair dryer.

UL COPYRIGHTED MATERIAL –
NOT AUTHORIZED FOR FURTHER REPRODUCTION OR
DISTRIBUTION WITHOUT PERMISSION FROM UL
Documents
Document Sharing Hub

Copyright Underwriters Laboratories Inc.
Provided by IHS under license with UL
No reproduction or networking permitted without license from IHS
Not for Resale
Full document details: UL 859 2006

11.3.2 Pin terminals

11.3.2.1 When an appliance is provided with pin terminals, the construction of the appliance shall be such that no live part will be exposed to unintentional contact both during and after the placement of the plug on the pins in the intended manner.

11.3.2.2 When an appliance is provided with pin terminals, a pin guard is required, such that:

a) A straight edge placed in any position, including across and in contact with edges of the plug opening without the plug in place, cannot be made to contact any current-carrying pin.

b) With the plug aligned with the pins and the face of the plug in a plane located perpendicular to the end or ends of the farthest projecting current-carrying pin, the probe illustrated in Figure 6.1 shall not touch any current-carrying pin while the probe is inserted through any opening with the appliance in any position.

11.3.2.3 When the pins on the appliance are of American National Standard configuration, the plug used in 11.3.2.2(b) shall consist of an appliance plug in accordance with the Standard for Wiring Devices – Dimensional Requirements, ANSI/NEMA WD6.

11.3.2.4 When the pins on the appliance are not of an American National Standard configuration, the plug used in 11.3.2.2(b) shall be the plug supplied with the appliance – 125 volts, 10 amperes, and 250 volts, 5 amperes.

11.3.2.5 When an appliance uses three or more pin terminals intended for use with a plug that covers all the pins, the terminals shall be spaced so that they will not accommodate a flatiron, appliance plug, or cord connector. These pins shall accommodate the plug required for the particular application.

11.3.2.6 A pin terminal shall be securely and rigidly mounted and shall be prevented from shifting in position by means other than friction between surfaces.

11.3.2.7 The requirement specified in 11.3.2.6 is intended primarily to provide for the maintenance of spacings as specified in 24.6, and to maintain required spacings between pin terminals. Under this requirement, consideration is also to be given to the means for locking terminals in position to maintain tightness.

11.3.2.8 For a heating appliance, the dimensions of pins and their center-to-center spacings (including the corresponding spacings of the female contacts of general use plugs that these arrangements of pins will accommodate) shall be as indicated in Table 11.4.

UL COPYRIGHTED MATERIAL –
NOT AUTHORIZED FOR FURTHER REPRODUCTION OR
DISTRIBUTION WITHOUT PERMISSION FROM UL

Documents
Document Sharing Hub

Copyright Underwriters Laboratories Inc.
Provided by IHS under license with UL
No reproduction or networking permitted without license from IHS
Not for Resale
Full document details: UL 859 2006

Table 11.4
Pins

Type and rating of plug that accommodates the pins	Pin configuration				Pin diameter,		Pin length,	
	Number	Arrangement	Spacing between centers, inch	(mm)	inch	(mm)	inch	(mm)
Appliance plug rated for 5 amperes at 250 volts and for 10 amperes at 125 volts	2	In line	1/2	12.7	5/32 ±0.005	4.0 ±0.13	9/16 – 5/8	14.3 – 15.9
Flat-iron plug rated for 5 amperes at 250 volts and for 10 amperes at 125 volts	2	In line	11/16	17.5	3/16 ±0.005	4.8 ±0.13	3/4 – 7/8	19.1 – 22.2
Jumbo appliance plug rated for 10 amperes at 250 volts and for 15 amperes at 125 volts	2	In line	1-1/16	27.0	3/16 ±0.005	4.8 ±0.13	3/4 – 7/8	19.1 – 22.2
Reversible plug (for two-heat control) rated for 10 amperes at 250 volts and for 15 amperes at 125 volts[a]	3	In line	7/8	22.2	3/16 ±0.005	4.8 ±0.13	3/4 – 7/8	19.1 – 22.2
Reversible plug (for two-or three-heat control) rated for 10 amperes at 250 volts and for 15 amperes at 125 volts[a]	3	One pin at each apex of an equilateral triangle	7/8	22.2	3/16 ±0.005	4.8 ±0.13	3/4 – 7/8	19.1 – 22.2

[a] This plug is usually made without a contact in one of the holes.

11.3.2.9 The material on which the pins are mounted, the proximity of any vapor outlet to the terminals, and the direction of the vapor spray shall be such that water shall be prevented from accumulating at the terminal.

UL COPYRIGHTED MATERIAL –
NOT AUTHORIZED FOR FURTHER REPRODUCTION OR
DISTRIBUTION WITHOUT PERMISSION FROM UL

Documents
Document Sharing Hub

Copyright Underwriters Laboratories Inc.
Provided by IHS under license with UL
No reproduction or networking permitted without license from IHS
Not for Resale
Full document details: UL 859 2006

11.4 Strain relief

11.4.1 Strain relief shall be provided such that stress on a flexible cord will not be transmitted to a terminal, splice, or internal wiring in the appliance or in a fitting (attachment plug, appliance plug, or similar component.

11.4.2 If a knot in a flexible cord serves as strain relief, the surface against which the knot bears or with which it contacts shall be free of any projection, sharp edge, burr, fin, results in abrasion of the insulation on the conductors.

11.5 Bushings

11.5.1 At a point where a flexible cord passes through an opening in a wall, barrier, or enclosing case, there shall be a bushing or the equivalent that is substantial, reliably secured in place, and that has a smooth, rounded surface against which the cord bears. The bushing or the equivalent is to protect the cord from abrasion damage; it is not intended for strain-relief or flex-relief purposes. An insulating bushing shall be provided if:

a) Type SP-1, SPE-1, SPT-1, SP-2, SPE-2, SPT-2, or other cord lighter than Type HSJ is used;

b) The wall or barrier is of metal; and

c) Construction is such that the cord might be subjected to strain or motion.

The heat- and moisture-resistant properties of the bushing material shall be that required for the particular application.

11.5.2 If the cord hole is in wood, porcelain, phenolic composition, or other nonconducting material, a smooth rounded surface is deemed equivalent to a bushing.

11.5.3 Ceramic materials and some molded compositions are acceptable for insulating bushings. A separate bushing of wood or rubber material (other than in a motor) is not. Vulcanized fiber may be used if the bushing is no less than 1/16 inch (1.6 mm) thick [with a minus tolerance of 1/64 inch (0.4 mm) for manufacturing variations] and if it is formed and secured in place so that it will not be affected adversely by conditions of ordinary moisture.

11.5.4 A separate soft rubber, neoprene, or polyvinyl chloride bushing may be used in the frame of a motor or in the enclosure of a capacitor physically attached to a motor (but not elsewhere in an appliance) when:

a) The bushing is not less than 1/16 inch (1.6 mm) thick, with a minus tolerance of 1/64 inch (0.4 mm); and

b) The bushing is located so that it will not be exposed to oil, grease, oily vapor, or other substance having a harmful effect on the bushing material.

Exception: A bushing of any of the materials specified may be used at any point in an appliance if used in conjunction with a type of cord for which an insulating bushing is not required and if the edges of the hole in which the bushing is mounted are smooth and free from any burr, fin, or similar abrading surface.

UL COPYRIGHTED MATERIAL –
NOT AUTHORIZED FOR FURTHER REPRODUCTION OR
DISTRIBUTION WITHOUT PERMISSION FROM UL

Documents
Document Sharing Hub

Copyright Underwriters Laboratories Inc.
Provided by IHS under license with UL
No reproduction or networking permitted without license from IHS
Not for Resale
Full document details: UL 859 2006