UL 859

STANDARD FOR SAFETY

Household Electric Personal Grooming Appliances

This document is only permissible for use by Mohamed Waheed of Bechtel Corporation. 7/20/2021 6:27:09 PM

Documents
Document Sharing Hub

Full document details: UL 859 2021

This document is only permissible for use by Mohamed Waheed of Bechtel Corporation. 7/20/2021 6:27:09 PM

Documents
Document Sharing Hub

UL COPYRIGHTED MATERIAL – NOT AUTHORIZED FOR FURTHER REPRODUCTION OR DISTRIBUTION WITHOUT PERMISSION FROM UL INC.

Full document details: UL 859 2021

UL Standard for Safety for Household Electric Personal Grooming Appliances, UL 859

Eleventh Edition, Dated June 20, 2012

Summary of Topics

This revision oof ANSI/UL 859 dated July 14, 2021 includes the following changes in requirements:

– Addition of Cord Tag Evaluated to UL 969A; 58.1.1, Section 63, 72.1.4, 72.4.2, 72.4.4, 72.5.2, 72.5.4, and 83.5

– Replacement of reference to UL 508C, Standard for Power Conversion Equipment with the reference to UL 61800-5-1, Standard for Adjustable Speed Electrical Power Drive Systems – Part 5-1: Safety Requirements – Electrical, Thermal and Energy; 28.3.7

Text that has been changed in any manner or impacted by UL's electronic publishing system is marked with a vertical line in the margin.

The new and revised requirements are substantially in accordance with Proposal(s) on this subject dated May 7, 2021.

All rights reserved. No part of this publication may be reproduced, stored in a retrieval system, or transmitted in any form by any means, electronic, mechanical photocopying, recording, or otherwise without prior permission of UL.

UL provides this Standard "as is" without warranty of any kind, either expressed or implied, including but not limited to, the implied warranties of merchantability or fitness for any purpose.

In no event will UL be liable for any special, incidental, consequential, indirect or similar damages, including loss of profits, lost savings, loss of data, or any other damages arising out of the use of or the inability to use this Standard, even if UL or an authorized UL representative has been advised of the possibility of such damage. In no event shall UL's liability for any damage ever exceed the price paid for this Standard, regardless of the form of the claim.

Users of the electronic versions of UL's Standards for Safety agree to defend, indemnify, and hold UL harmless from and against any loss, expense, liability, damage, claim, or judgment (including reasonable attorney's fees) resulting from any error or deviation introduced while purchaser is storing an electronic Standard on the purchaser's computer system.

This document is only permissible for use by Mohamed Waheed of Bechtel Corporation. 7/20/2021 6:27:09 PM

UL COPYRIGHTED MATERIAL – NOT AUTHORIZED FOR FURTHER REPRODUCTION OR DISTRIBUTION WITHOUT PERMISSION FROM UL INC.

Documents Document Sharing Hub

Full document details: UL 859 2021

No Text on This Page

This document is only permissible for use by Mohamed Waheed of Bechtel Corporation. 7/20/2021 6:27:09 PM

Documents
Document Sharing Hub
UL COPYRIGHTED MATERIAL – NOT AUTHORIZED FOR FURTHER REPRODUCTION OR DISTRIBUTION WITHOUT PERMISSION FROM UL INC.
Full document details: UL 859 2021

JUNE 20, 2012
(Title Page Reprinted: July 14, 2021)

ANSI/UL 859-2021

UL 859

Standard for Household Electric Personal Grooming Appliances

The first, second, and third editions were titled Beauty-Parlor Equipment. The fourth, fifth, and sixth editions were titled Electric Personal Grooming Appliances.

First Edition – September, 1954
Second Edition – November, 1966
Third Edition – May, 1971
Fourth Edition – July, 1975
Fifth Edition – July, 1978
Sixth Edition – February, 1984
Seventh Edition – January, 1988
Eighth Edition – January, 1991
Ninth Edition – December, 1995
Tenth Edition – August, 2002

Eleventh Edition

June 20, 2012

This ANSI/UL Standard for Safety consists of the Eleventh Edition including revisions through July 14, 2021.

The most recent designation of ANSI/UL 859 as an American National Standard (ANSI) occurred on July 14, 2021. ANSI approval for a standard does not include the Cover Page, Transmittal Pages, and Title Page.

Comments or proposals for revisions on any part of the Standard may be submitted to UL at any time. Proposals should be submitted via a Proposal Request in UL's On-Line Collaborative Standards Development System (CSDS) at https://csds.ul.com.

UL's Standards for Safety are copyrighted by UL. Neither a printed nor electronic copy of a Standard should be altered in any way. All of UL's Standards and all copyrights, ownerships, and rights regarding those Standards shall remain the sole and exclusive property of UL.

COPYRIGHT © 2021 UNDERWRITERS LABORATORIES INC.

This document is only permissible for use by Mohamed Waheed of Bechtel Corporation. 7/20/2021 6:27:09 PM

UL COPYRIGHTED MATERIAL – NOT AUTHORIZED FOR FURTHER REPRODUCTION OR DISTRIBUTION WITHOUT PERMISSION FROM UL INC.

Documents
Document Sharing Hub

Full document details: UL 859 2021

No Text on This Page

This document is only permissible for use by Mohamed Waheed of Bechtel Corporation. 7/20/2021 6:27:09 PM

Documents
Document Sharing Hub
UL COPYRIGHTED MATERIAL – NOT AUTHORIZED FOR FURTHER REPRODUCTION OR DISTRIBUTION WITHOUT PERMISSION FROM UL INC.
Full document details: UL 859 2021

CONTENTS

INTRODUCTION

1 Scope 7
2 Components 7
3 Units of Measurement 8
4 Undated References 9
5 Glossary 9

CONSTRUCTION

6 General 14
7 Hair Dryer Immersion Protection 15
8 Frame and Enclosure 20
8.1 General 20
8.2 Polymeric enclosures and parts 20
8.3 Metal enclosures 20
8.4 Corrosion resistance 21
8.5 Accessibility of live parts 21
8.6 Doors and covers 26
9 Reduction of Risk of Injury to Persons 26
9.1 General 26
9.2 Appliances with reservoirs 26
9.3 Wax depilatory appliances 27
10 Mechanical Assembly 28
11 Stability 29
12 Hanging and Mounting Means 29
13 Supply Connections 30
13.1 Permanently-connected appliances 30
13.2 Wiring terminals 30
13.3 Cord-connected appliances 32
13.4 Strain relief 40
13.5 Bushings 41
13.6 Direct plug-in appliances 42
14 Live Parts 46
15 Reservoirs 46
16 Internal Wiring 46
17 Heating Element 49
18 Electrical Insulation 49
18.1 General 49
18.2 Film-coated wire (magnet wire) 50
19 Thermal Insulation 50
20 Overcurrent Protection 51
21 Thermal Cutoffs (Fusible Links) 51
22 Lampholders and Receptacles 51
23 Switches 52
23.1 General 52
23.2 Dual-voltage selector 54
24 Automatic Controls and Control Circuits 54
24.1 General 54
24.2 Electromechanical and electronic controls 56
25 Controls – End Product Test Parameters 56
25.1 General 56
25.2 Auxiliary controls 56

This document is only permissible for use by Mohamed Waheed of Bechtel Corporation. 7/20/2021 6:27:09 PM

Documents
Document Sharing Hub

UL COPYRIGHTED MATERIAL – NOT AUTHORIZED FOR FURTHER REPRODUCTION OR DISTRIBUTION WITHOUT PERMISSION FROM UL INC.

Full document details: UL 859 2021

25.3 Electronic Operating controls (regulating controls) ... 57
25.4 Electronic Protective controls (limiting controls) ... 58
26 Spacings ... 60
26.1 General ... 60
26.2 Spacings on printed wiring boards ... 61
27 Grounding ... 61
28 Motors ... 62
28.1 Construction ... 62
28.2 Brush wear-out ... 62
28.3 Overload protection ... 63
28.4 Insulation systems ... 65
29 Transformers ... 65
30 Batteries and Battery Chargers ... 66
31 Capacitors ... 66
32 Light Sources and Associated Components ... 67
33 Ionization Circuits ... 67
33A Button or Coin Cell Batteries of Lithium Technologies ... 68

PERFORMANCE

34 General ... 68
35 Strength of Enclosure Test ... 68
36 Tip-Over Test ... 69
37 Stability Test ... 69
38 Leakage Current Test ... 70
39 Leakage Current Test Following Humidity Conditioning ... 72
40 Immersion Protection Trip Time Measurement Test ... 72
40.1 As-received hair dryers ... 72
40.2 Conditioned hair dryers ... 74
41 Dew Point Humidity Test ... 75
42 Conductive Coating Test ... 75
42.1 General ... 75
42.2 Thermal cycling ... 76
42.3 Limited thermal aging ... 76
42.4 Short term aging ... 78
42.5 Humidity conditioning ... 78
43 Power Input Test ... 78
44 Normal Temperature Test ... 78
44.1 All appliances ... 78
44.2 Wax depilatory appliances ... 86
44.3 Heated air curling irons and brushes ... 86
44.4 Hair-drying appliances ... 89
44.5 Hand-supported hair dryers ... 89
45 Dielectric Voltage-Withstand Test ... 92
46 Abnormal Operation Tests ... 92
46.1 General ... 92
46.2 Hair dryers – drape test ... 93
46.3 Hair dryer locked rotor test ... 94
46.4 Hand-supported hair dryers ... 94
46.5 Dual-voltage appliances ... 97
46.6 All appliances – short-circuit, stall tests ... 98
46.7 Hair curler heater – short-circuit test ... 98
46.8 Bonnet-type hair dryers – hair entanglement test ... 99
46.9 Wax depilatory appliances ... 99
46.10 Hair dryer immersion protective devices with convenience receptacles ... 100
46.11 Appliances having an automatically-controlled preheat cycle ... 101

This document is only permissible for use by Mohamed Waheed of Bechtel Corporation. 7/20/2021 6:27:09 PM

Documents
Document Sharing Hub

UL COPYRIGHTED MATERIAL – NOT AUTHORIZED FOR FURTHER REPRODUCTION OR DISTRIBUTION WITHOUT PERMISSION FROM UL INC.

Full document details: UL 859 2021

47 Exposure to Moisture Test 101
48 Strain Relief Test 102
49 Cord Flexing Test 102
50 Cord Flexing Test for Appliance Leakage-Current-Interrupter (ALCI) 104
51 Test for Security of Swivel Assembly 106
52 Swivel Endurance Test 106
53 Hinge Endurance Test 107
54 Test of Automatic Controls 107
54.1 Overload 107
54.2 Endurance 108
55 Test of Thermal Cutoffs (Fusible Links) 109
56 Motor Control Overload Test 109
57 Grounding Continuity Test 110
58 Test for Permanence of Cord Tag for Hand-Supported Hair-Drying Appliances 110
58.1 General 110
58.2 Test conditions 110
58.3 Test method 111
59 Mounting Means Strength Test 111
60 Extended Operation Test 111
61 Heating Element Endurance Test 114
62 Test of Physical Properties of a Liquid Container, Seal, or Diaphragm 114
63 Label Adhesion Test *(Deleted)* 115
64 Flammability Test – Wax for Depilatory Appliances 115
65 Additional Testing for Hand-Supported Grooming Appliances with a Detachable Power Supply Cord and for Hand-Supported Grooming Appliances with Detachable Parts Intended to be Disconnected From Power Under Load Conditions 116
66 Thermoplastic Motor Insulation Systems 118
66.1 General 118
66.2 Abnormal conditioning 119
66.3 Overload-burnout conditioning 119
66.4 Thermal aging 119
67 Ozone Test 121

MANUFACTURING AND PRODUCTION-LINE TESTS

68 Dielectric Voltage-Withstand Test 121
69 Grounding Continuity Test 123
69.1 Continuity of grounding connection 123
69.2 Electrical indicating device 124
70 Hair Dryer Power Input Test 124

RATINGS

71 Details 124

MARKINGS

72 Details 125
72.1 General 125
72.2 Body- or table-supported hood- or bonnet-type hair dryers 126
72.3 Dual-voltage appliances 126
72.4 Hand-supported hair-drying appliances 126
72.5 Permanently-installed wall-mounted hair dryers 128
72.6 Curling irons 131
72.7 Direct plug-in appliances 132

This document is only permissible for use by Mohamed Waheed of Bechtel Corporation. 7/20/2021 6:27:09 PM

Documents
Document Sharing Hub

UL COPYRIGHTED MATERIAL – NOT AUTHORIZED FOR FURTHER REPRODUCTION OR DISTRIBUTION WITHOUT PERMISSION FROM UL INC.

Full document details: UL 859 2021

72.8 Wax depilatory appliances 132
72.9 Appliances with GFCIs or similar protective devices 133
72.10 Convenience receptacle of a hand-supported hair dryer immersion protective device 133
72.11 Hand-supported appliances with detachable power supply cords 133

INSTRUCTION MANUALS

73 General 133
74 Instructions Pertaining to a Risk of Fire, Electric Shock, or Injury to Persons 134
75 Installation Instructions 141
76 Operating Instructions 142
77 User-Maintenance Instructions 145

ELECTRODE-TYPE APPLIANCES

78 General 145
79 Construction 145
80 Operation Test 145
81 Leakage Current Test 146
82 Disassembly and Reassembly 148
83 Markings 148
84 Operating Instructions 149

WALL-HUNG HAIR DRYERS

85 Scope 149
86 General 149
87 Construction 149
88 Performance 150
89 Markings 150
90 Use and Care Instructions 150
91 Installation Instructions 151

SUPPLEMENT SA – HAIR DRYER ACCESSORIES

SA1 Scope 153
SA2 General 153
SA3 Markings 153
SA3.1 General 153
SA3.2 Hair dryer accessories 153
SA3.3 Product packaging 153
SA3.4 Instruction sheet 154
SA4 Instructions 155

This document is only permissible for use by Mohamed Waheed of Bechtel Corporation. 7/20/2021 6:27:09 PM

Documents
Document Sharing Hub
UL COPYRIGHTED MATERIAL – NOT AUTHORIZED FOR FURTHER REPRODUCTION OR DISTRIBUTION WITHOUT PERMISSION FROM UL INC.
Full document details: UL 859 2021

INTRODUCTION

1 Scope

1.1 These requirements cover electric personal grooming appliances intended for household use, such as hair curlers and dryers, combs, brushes, and similar appliances to be used in accordance with the National Electrical Code, NFPA 70.

1.2 These requirements do not cover appliances rated more than 250 volts nor appliances covered in the following Standards for Safety:

a) The Standard for Medical Electrical Equipment, Part 1: General Requirements for Safety, UL 60601-1;

b) The Standard for Personal Hygiene and Health Care Appliances, UL 1431;

c) The Standard for Household and Similar Electrical Appliances, Part 2: Particular Requirements for Shavers, Hair Clippers, and Similar Appliances, UL 60335-2-8;

d) The Standard for Motor-Operated Massage and Exercise Machines, UL 1647;

e) The Standard for Electric Heating Pads, UL 130; and

f) The Standard for Commercial Electric Personal Grooming Appliances, UL 1727.

2 Components

2.1 A component of a product covered by this standard shall:

a) Comply with the requirements for that component as indicated in the individual section(s) covering that component;

b) Be used in accordance with its rating(s) established for the intended conditions of use;

c) Be used within its established use limitations or conditions of acceptability;

d) Additionally comply with the applicable requirements of this standard; and

e) Not contain mercury, unless used within a fluorescent, high intensity discharge, or neon lamp bulb.

Exception No. 1: A component of a product covered by this standard is not required to comply with a specific component requirement that:

a) Involves a feature or characteristic not required in the application of the component in the product;

b) Is superseded by a requirement in this standard; or

c) Is separately investigated when forming part of another component, provided the component is used within its established ratings and limitations.

Exception No. 2: A component complying with a component standard other than those cited in this standard is acceptable if:

a) The component also complies with the applicable component standard indicated in this standard; or

This document is only permissible for use by Mohamed Waheed of Bechtel Corporation. 7/20/2021 6:27:09 PM

Documents
Document Sharing Hub

UL COPYRIGHTED MATERIAL – NOT AUTHORIZED FOR FURTHER REPRODUCTION OR DISTRIBUTION WITHOUT PERMISSION FROM UL INC.

Full document details: UL 859 2021

b) The component standard:

1) Is compatible with the ampacity and overcurrent protection requirements of the National Electrical Code, ANSI/NFPA 70, where appropriate;

2) Considers long-term thermal properties of polymeric insulating materials in accordance with the Standard for Polymeric Materials – Long Term Property Evaluations, UL 746B; and

3) Any use limitations of the other component standard is identified and appropriately accommodated in the end use application. For example, a component used in a household application, but intended for industrial use and complying with the relevant component standard may assume user expertise not common in household applications.

2.2 Specific components are incomplete in construction features or restricted in performance capabilities. Such components are intended for use only under limited conditions, such as certain temperatures not exceeding specified limits, and shall be used only under those specific conditions.

2.3 A component that is also intended to perform other functions, such as:

a) Overcurrent protection;

b) Ground-fault circuit-interruption;

c) Surge suppression;

d) Any other similar functions; or

e) Any combination thereof.

shall comply additionally with the requirements of the applicable UL standard(s) that cover devices that provide those functions.

Exception: Where these other functions are not required for the application and not identified as part of markings, instructions, or packaging for the appliance, the additional component standard(s) need not be applied.

2.4 A component not anticipated by the requirements of this standard, not specifically covered by the component standards noted in this Standard, and that involves a risk of fire, electric shock, or injury to persons, shall be additionally investigated in accordance with the applicable UL standard, and shall comply with 2.1 (b) – (e).

2.5 With regard to a component being additionally investigated, reference to construction and performance requirements in another UL standard is suitable where that standard anticipates normal and abnormal use conditions consistent with the application of this standard.

3 Units of Measurement

3.1 Values stated without parentheses are the requirement. Values in parentheses are explanatory or approximate information.

3.2 Unless otherwise indicated, all voltage and current values mentioned in this standard are root-mean-square (rms).

This document is only permissible for use by Mohamed Waheed of Bechtel Corporation. 7/20/2021 6:27:09 PM

Documents
Document Sharing Hub

UL COPYRIGHTED MATERIAL – NOT AUTHORIZED FOR FURTHER REPRODUCTION OR DISTRIBUTION WITHOUT PERMISSION FROM UL INC.

Full document details: UL 859 2021

4 Undated References

4.1 Any undated reference to a code or standard appearing in the requirements of this standard shall be interpreted as referring to the latest edition of that code or standard.

5 Glossary

5.1 For the purpose of this standard the following definitions apply.

5.2 APPLIANCE COUPLER – A single-outlet, female contact device for attachment to a flexible cord as part of a detachable power-supply cord to be connected to an appliance inlet (motor attachment plug).

5.3 APPLIANCE INLET (MOTOR ATTACHMENT PLUG) – A male contact device mounted on an end product appliance to provide an integral blade configuration for the connection of an appliance coupler or cord connector.

5.4 APPLIANCE (FLATIRON) PLUG – An appliance coupler type of device having a cord guard and a slot configuration specified for use with heating or cooking appliances.

5.5 AUTOMATIC CONTROL – A device intended for automatic control of operating time, temperature, or pressure under conditions of intended operation and not for protection against conditions resulting from abnormal operations.

5.6 AUTOMATICALLY CONTROLLED APPLIANCE – An appliance that complies with one or more of the following conditions:

a) The repeated starting of the appliance is independent of any manual control if, after one complete cycle of operation, a limit device or similar component opens the circuit;

b) During any single preset cycle of operation, the motor is caused to stop and restart;

c) When the appliance is energized, the initial starting of the motor may be intentionally delayed beyond intended, conventional starting; and

d) For an appliance using a motor with a separate starting winding, during any single predetermined cycle of operation, automatic changing of the mechanical load reduces the motor speed sufficiently to re-establish starting-winding connections to the supply circuit.

5.7 BODY-SUPPORTED APPLIANCE – An appliance that is physically supported by any part of the body, other than the hand of the user, during the performance of its intended functions (such as a shoulder-, body-, or head-supported hair dryer). Reference is to be made to the user manual of the appliance in establishing the intended functions of the appliance.

5.8 CONTROL, AUTOMATIC ACTION – A control in which at least one aspect is non-manual.

5.9 CONTROL, AUXILIARY – A device or assembly of devices that provides a functional utility, is not relied upon as an operational or protective control, and therefore is not relied upon for safety. For example, an efficiency control not relied upon to reduce the risk of electric shock, fire, or injury to persons during normal or abnormal operation of the end product is considered an auxiliary control.

5.10 CONTROL, MANUAL – A device that requires direct human interaction to activate or reset the control.

This document is only permissible for use by Mohamed Waheed of Bechtel Corporation. 7/20/2021 6:27:09 PM

Documents
Document Sharing Hub

UL COPYRIGHTED MATERIAL – NOT AUTHORIZED FOR FURTHER REPRODUCTION OR DISTRIBUTION WITHOUT PERMISSION FROM UL INC.

Full document details: UL 859 2021

5.11 CONTROL, OPERATING – A device or assembly of devices, the operation of which starts or regulates the end product during normal operation. For example, a thermostat, the failure of which a thermal cutout/limiter or another layer of protection would mitigate the potential hazard, is considered an operating control. Operating controls are also referred to as “regulating controls”.

5.12 CONTROL, PROTECTIVE – A device or assembly of devices, the operation of which is intended to reduce the risk of electric shock, fire or injury to persons during reasonably anticipated abnormal operation of the appliance. Protective controls are also referred to as “limiting controls” and “safety controls.”

Note – During the evaluation of the protective control/circuit, the protective functions are verified under normal and single-fault conditions of the control.

5.13 CONTROL, TYPE 1 ACTION – The actuation of an automatic control for which the manufacturing deviation and the drift (tolerance before and after certain conditions) of its operating value, operating time, or operating sequence has not been declared and tested under this standard.

5.14 CONTROL, TYPE 2 ACTION – The actuation of an automatic control for which the manufacturing deviation and the drift (tolerance before and after certain conditions) of its operating value, operating time, or operating sequence have been declared and tested under this standard.

5.15 CORD CONNECTOR – A female contact device wired on flexible cord for use as an extension from an outlet to make a detachable electrical connection to an attachment plug or, as an appliance coupler, to an equipment inlet.

5.16 COUNTER-SUPPORTED APPLIANCE – An appliance that is physically supported by a counter, table, or bench during the performance of its intended functions (such as a bonnet-type hair dryer). Reference is to be made to the user manual of the appliance in establishing the intended functions of the appliance.

5.17 DIRECT PLUG-IN APPLIANCE – An appliance, without a power supply cord, that is physically supported by direct insertion of its integral blades into a receptacle.

5.18 DUAL-VOLTAGE APPLIANCE – An appliance rated for use at 120 or 240 volts and provided with a means to change from one voltage to the other.

5.19 FIXED APPLIANCE – An appliance intended to be permanently connected electrically.

5.20 FLOOR-SUPPORTED APPLIANCE – An appliance that is physically supported by the floor during the performance of its intended functions (such as hair dryers with roll-about stands). Reference is to be made to the user manual of the appliance in establishing the intended functions of the appliance.

5.21 HAIR CRIMPING IRON – A hand-supported hair curling appliance having hinged arms and ridged or wavy surfaced electrically heated tongs between which hair is placed. A typical construction is shown in Figure 5.1.

This document is only permissible for use by Mohamed Waheed of Bechtel Corporation. 7/20/2021 6:27:09 PM

Documents
Document Sharing Hub
UL COPYRIGHTED MATERIAL – NOT AUTHORIZED FOR FURTHER REPRODUCTION OR DISTRIBUTION WITHOUT PERMISSION FROM UL INC.
Full document details: UL 859 2021

Figure 5.1

Typical hair crimping iron

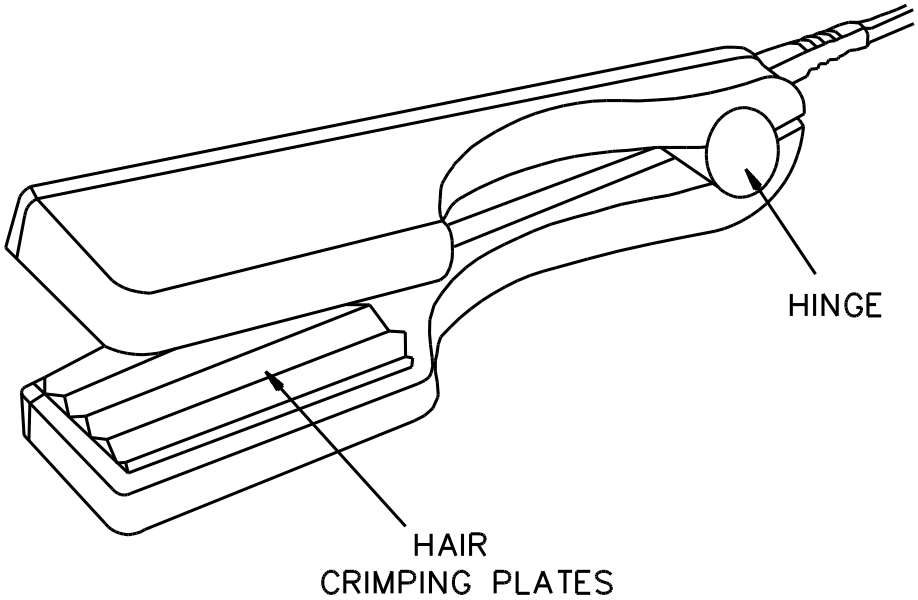

S3516

5.22 HAIR CURLER HEATER (HAIR SETTER) – A counter-supported appliance having posts or wells on or in which hair curling devices (such as rollers) are heated before being applied to the hair. The term also applies to a construction that has individual electrical hair curlers (rollers) with built-in heating elements and male electrical fittings which plug into female contacts in the appliance.

5.23 HAIR STRAIGHTENING IRON – An appliance similar to a hair crimping iron described in 5.21 except that the hair crimping plates are replaced with flat plates.

5.24 HAND-HELD APPLIANCE/HAND-GUIDED APPLIANCE – A portable appliance that during intended use is contacted by the hand of the user for purposes of electrical or physical control but not for complete support.

5.25 HAND-SUPPORTED APPLIANCE – An appliance that is physically supported by the hand of the user during the performance of its intended functions (such as a curling iron). Reference is to be made to the user manual of the appliance in establishing the intended functions of the appliance.

5.26 HEATED AIR CURLING IRON (or BRUSH) – A curling iron (or brush) in which a fan included in the appliance blows air over the heating elements and out through openings in the barrel of the appliance.

5.27 HIGH-VOLTAGE CIRCUIT – A circuit involving a potential of more than 600 volts.

5.28 INPUT VOLTAGE SELECTOR – The means provided on an appliance to adjust for the available input voltage.

This document is only permissible for use by Mohamed Waheed of Bechtel Corporation. 7/20/2021 6:27:09 PM

Documents
Document Sharing Hub

UL COPYRIGHTED MATERIAL – NOT AUTHORIZED FOR FURTHER REPRODUCTION OR DISTRIBUTION WITHOUT PERMISSION FROM UL INC.

Full document details: UL 859 2021

5.29 LIMIT CONTROL – As applicable to hand-supported hair dryers, a limit control, as shown in item A of Figure 5.2, is a non-resettable control (a control intended to operate only once) that operates to open all electrical circuits to reduce the risk of fire or electric shock.

Figure 5.2

Typical hair dryer circuit

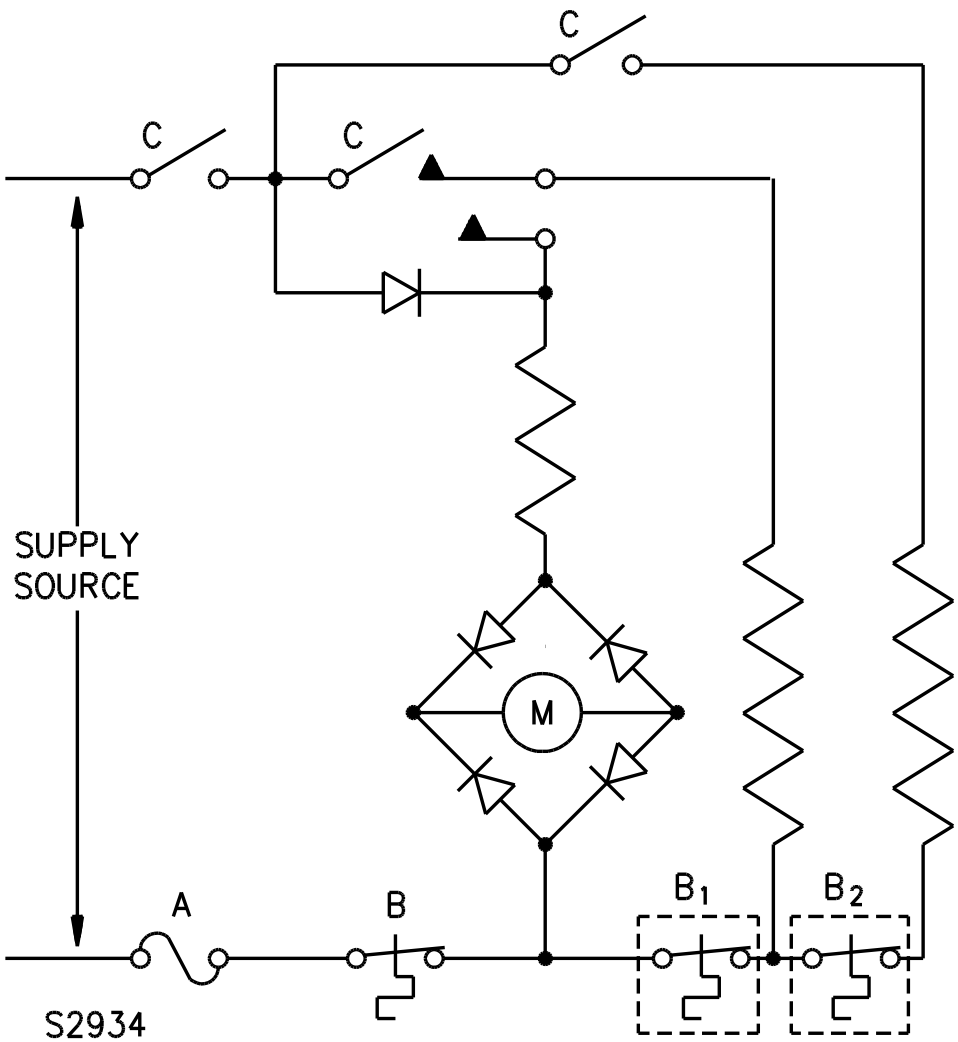

A – Limit control (a non-resettable device, as defined in 5.28).

B – Temperature control (a calibrated automatic-reset device, as defined in 5.36).

B_1, B_2 – Temperature control shown at two other locations.

C – Switches.

M – Motor.

This document is only permissible for use by Mohamed Waheed of Bechtel Corporation. 7/20/2021 6:27:09 PM

UL COPYRIGHTED MATERIAL – NOT AUTHORIZED FOR FURTHER REPRODUCTION OR DISTRIBUTION WITHOUT PERMISSION FROM UL INC.

Documents
Document Sharing Hub

5.30 LIMITED ENERGY PRIMARY CIRCUIT – A line voltage circuit that incorporates a limiting impedance in series with the supply circuit so that:

a) The circuit potential on the load side of the limiting impedance does not exceed 42.4 volts peak (30 volts rms) under intended conditions; and

b) The maximum energy available at the load side of the limiting impedance circuit is 100 volt-amperes under any condition, including abnormal operation.

5.31 LINE VOLTAGE CIRCUIT – A circuit involving a potential of not more than 250 volts and having circuit characteristics in excess of those of a low-voltage circuit or a limited primary energy circuit.

5.32 LOW-VOLTAGE CIRCUIT – A circuit supplied by a primary battery, by a Class 2 transformer, or by a combination of a transformer and fixed impedance that, as a unit, complies with all performance requirements for Class 2 transformers and that does not involve an open circuit potential of more than 42.4 volts peak (30 volts rms).

5.33 PORTABLE APPLIANCE – An appliance capable of being carried or conveyed.

5.34 PREHEAT CYCLE – A cycle of operation, intended for rapid heating, in which the heating element operates at an initial higher level of energy for a period of time. The energy level then declines to a lower normal use temperature-maintenance level. It may fluctuate between the high and low levels during a use of the appliance. The energy level may be controlled by varying the amount of wattage, the duration or duty cycle, or a combination thereof. The change in the energy level may be initiated by a timer, a temperature controller, or a combination of the two. Appliances having a preheat cycle of operation are commonly known as "Instant Heat" type. The temperature transient condition associated with the operation of a positive temperature coefficient (PTC) heating element or a thermostat is not considered to be a preheat cycle.

The following are some examples of preheat type appliances:

a) The appliance operates at the higher preheat wattage level for a length of time determined by a timing device or circuit. The wattage then drops to a constant lower temperature-maintenance level for the remainder of operation.

b) The appliance operates at a higher preheat wattage level initially for varying lengths of time depending upon temperature. The wattage varies with time in response to the temperature controller to maintain normal operating temperature.

c) The appliance operates at a fixed wattage level for a predetermined length of time. Then the same amount of wattage is applied on a pre-programmed duty cycle by means of a switching mechanism to maintain normal operating temperature.

d) The appliance operates at a fixed wattage level for a predetermined length of time. Then the same amount of wattage is applied on a duty cycle that adjusts depending upon temperature by means of a switching mechanism and a temperature controller.

5.35 STATIONARY APPLIANCE – A cord-connected appliance intended to be fastened in place or located in a dedicated space.

5.36 TEMPERATURE CONTROL – As applicable to hand-supported hair dryers, a temperature control, as shown in item B of Figure 5.2, is an automatic-reset temperature-sensing control that opens an electrical circuit to limit temperatures during Abnormal Operation Tests described in Section 46 and/or Normal Temperature test (except no fabric condition) described in 44.5.3. A temperature control is calibrated and endurance tested for at least 6,000 cycles of operation and complies with all other requirements in the Standard for Limit Controls, UL 353, or the Standard for Temperature-Indicating and

This document is only permissible for use by Mohamed Waheed of Bechtel Corporation. 7/20/2021 6:27:09 PM

UL COPYRIGHTED MATERIAL – NOT AUTHORIZED FOR FURTHER REPRODUCTION OR DISTRIBUTION WITHOUT PERMISSION FROM UL INC.

Documents Document Sharing Hub

Full document details: UL 859 2021

-Regulating Equipment, UL 873. Compliance with the Standard for Automatic Electrical Controls for Household and Similar Use, Part 1: General Requirements, UL 60730-1, and/or the applicable Part 2 standard from the UL 60730 series fulfills the UL 873 requirements. See 24.2.1 – 24.2.2.

5.37 TEMPERATURE-REGULATING CONTROL – A control that functions only to regulate the temperature under conditions of intended use.

5.38 THERMAL CUT-OFF – A temperature- or temperature- and current-sensitive device that is replaceable but not resettable. It is intended to reduce the risk of fire, electric shock, or injury to persons due to overheating of an appliance during abnormal operation.

5.39 WALL-HUNG APPLIANCE – A cord-connected appliance that is provided with keyhole slots, hanger holes, similar feature for hanging on a wall during the performance of its intended function. A wall-hung appliance may consist of two interconnected units where one is intended to hang on a wall and the other is intended to be supported by hand during use. Reference is to be made to the user manual of the appliance in establishing the intended functions of the appliance.

5.40 WAX DEPILATORY APPLIANCE – An appliance intended for melting a wax-like material (hereafter referred to as wax) that is first applied to and then stripped from the body for the purpose of removing unwanted hair.

CONSTRUCTION

6 General

6.1 In the following text, a requirement that applies only to a specific type or types of appliances, such as a hand-supported hair dryer and a curling iron, is so identified by specific reference in that requirement to the type or types involved. Absence of such specific reference or use of the term "appliance" indicates that the requirement applies to all appliances covered by this standard.

6.2 An appliance that is a combination of two or more types (for example, an appliance having a hand-supported part and a counter-supported part), or an appliance that fits the definition of two or more types (for example, an appliance that can be used while supported by hand or while supported by a counter top), is to be investigated in accordance with the applicable requirements for the types of appliances involved. If two requirements that address the same condition differ, the appliance is to be investigated to the more severe requirement.

6.3 A heated air curling iron or brush, as defined in 5.25, shall comply with the requirements applicable to hand-supported hair dryers and curling irons.

6.4 A container for liquid intended for use with the appliance, and supplied as part of the appliance, shall comply with applicable construction requirements.

6.5 A curling iron that is likely to be laid on combustible material shall be provided with a stand made of material resistant to combustion upon which it may be placed when not in use.

Exception: A stand need not be provided if the temperature attained by the appliance is not sufficiently high to cause the ignition of the combustible material.

6.6 A curling iron that attains a temperature higher than 100°C (212°F) when operated continuously shall be provided with an integral stand. A stand provided for other types of appliances may be a separate device or integral with the appliance.

This document is only permissible for use by Mohamed Waheed of Bechtel Corporation. 7/20/2021 6:27:09 PM

Documents
Document Sharing Hub
UL COPYRIGHTED MATERIAL – NOT AUTHORIZED FOR FURTHER REPRODUCTION OR DISTRIBUTION WITHOUT PERMISSION FROM UL INC.
Full document details: UL 859 2021

6.7 With respect to 6.6, an integral stand provided for a curling iron shall be of such design or shape that any surface of the curling iron exceeding 150°C (302°F) will not contact the supporting surface when the curling iron is supported in its intended manner by the stand.

6.8 A polymeric material used as an integral stand in compliance with the requirements in 6.7 shall be rated for the temperature it is subjected to during use.

7 Hair Dryer Immersion Protection

7.1 A hand-supported hair-drying appliance (such as a hair dryer, blower-styler, styler-dryer, heated air comb, heated-air hair curler, curling iron-hair dryer combination, a wall-hung hair dryer or the hand unit of a wall-mounted hair dryer, or a similar appliance) shall be constructed to reduce the risk of electric shock when the appliance is energized, with its power switch in either the "on" or "off" position, and immersed in water having an electrically conductive path to ground.

7.2 Compliance with 7.1 may be accomplished with the use of an:

a) Integral ground-fault circuit-interrupter (GFCI) or

b) Integral protective device of another type that de-energizes all current-carrying parts (hereafter referred to as a protective device) when the hand-supported hair-drying appliance is immersed in water having an electrically conductive path to ground.

7.3 If a hand-supported hair-drying appliance is provided with a GFCI, the GFCI shall comply with the requirements for Class A cord-connected GFCIs in the Standard for Ground-Fault Circuit-Interrupters, UL 943.

Exception: A GFCI located in the wall unit of a wall-mounted permanently-connected hair dryer shall comply with the requirements for Class A permanently-connected GFCIs in UL 943.

7.4 If a hand-supported hair-drying appliance is provided with a protective device other than a GFCI, the protective device shall be investigated and determined to be acceptable for the application. Investigation of the protective device shall include, but need not be limited to, consideration of:

a) Electrical rating,

b) Operating temperatures,

c) Reliability of operation,

d) Resistance to the effects of abnormal operating conditions,

e) Resistance to mechanical abuse,

f) Resistance to electrical transients, and

g) Resistance to moisture.

The combination of hair-drying appliance and protective device shall comply with the test described in the Immersion-Protection Trip Time Measurement Test, Section 40.

Exception No. 1: A protective device is deemed acceptable for the application if it complies with the requirements for Class A cord-connected GFCIs in the Standard for Ground-Fault Circuit-Interrupters, UL 943, except that it is not required to:

a) Have a grounding conductor;

This document is only permissible for use by Mohamed Waheed of Bechtel Corporation. 7/20/2021 6:27:09 PM

Documents
Document Sharing Hub

UL COPYRIGHTED MATERIAL – NOT AUTHORIZED FOR FURTHER REPRODUCTION OR DISTRIBUTION WITHOUT PERMISSION FROM UL INC.

Full document details: UL 859 2021

b) Have the same type of power supply cord;

c) Comply with the high-resistance ground faults test under the condition that any power conductor is open-circuited; or

d) Provide grounded neutral protection by compliance with the high-resistance ground faults test, under the test condition that the neutral conductor is grounded at a point in the load circuit.

Exception No. 2: A protective device is deemed acceptable for the application if it complies with the requirements in the Standard for Appliance Leakage-Current Interrupters, UL 943B.

The combination of a hand-supported hair-drying appliance and such a protective device is not required to be subjected to the test described in the Conductive Coating Test, Section 35.

7.5 A GFCI or other protective device shall be integral with the attachment plug of the hand-supported hair-drying appliance power supply cord.

Exception No. 1: For a wall-mounted permanently-connected hair dryer, the GFCI or other protective device may be located in the wall unit.

Exception No. 2: A GFCI or other protective device may be located in the power supply cord as a through-cord construction or in the hair dryer enclosure, after additional investigations with regard to acceptability after immersion, resistance to mechanical abuse, and similar considerations.

7.6 A user-resettable protective device shall incorporate a supervisory circuit as described in the Standard for Ground-Fault Circuit-Interrupters, UL 943, for GFCIs.

Exception: A user-resettable protective device may be provided with a reset feature not having a test function based on all of the following:

a) The protective device complies with the Standard for Tests for Safety-Related Controls Employing Solid-State Devices, UL 991. If the computational investigation is conducted, the maximum predicted failure rate (λp) shall not exceed 1.5 failures per million hours predicted. If the demonstrated method is conducted, the test acceleration multiplier shall be 5763.

b) The instructions provided with the appliance alert the user to the reset feature and how and when to use it.

c) The instructions provided with the appliance alert the user to not reset and reuse the appliance should the protective device trip as a result of immersion.

7.7 A switch included for testing a user resettable protective device shall be permanently marked "Test" and "Reset" on or adjacent to the switch actuators.

7.8 After a protective device de-energizes current-carrying parts, it shall not automatically reset.

7.9 A protective device that is integral with the attachment plug of a hand-supported hair-drying appliance may be provided with a single outlet convenience receptacle when all of the following requirements are met:

a) The convenience receptacle is:

1) Of the same configuration as the attachment plug,

2) Wired on the load side of the protective device, and

This document is only permissible for use by Mohamed Waheed of Bechtel Corporation. 7/20/2021 6:27:09 PM

Documents
Document Sharing Hub

UL COPYRIGHTED MATERIAL – NOT AUTHORIZED FOR FURTHER REPRODUCTION OR DISTRIBUTION WITHOUT PERMISSION FROM UL INC.

Full document details: UL 859 2021

3) Wired so that the same polarization as the attachment plug is maintained.

b) The convenience receptacle has a rating of 15 amperes, 125 volts and complies with the Standard for Attachment Plugs and Receptacles, UL 498.

c) The face of a convenience receptacle that is less than 5/8 inch (15.9 mm) wide or 7/8 inch (22.2 mm) long complies with the mounting clearance requirements specified in 22.8.

d) The area surrounding the convenience receptacle is free of any projections that might interfere with full insertion of the blades of an attachment plug having a face size as specified in Figure 7.1.

e) When an attachment plug, as shown in Figure 7.1, is fully inserted into the convenience receptacle, the test and reset buttons of a user-resettable protective device are accessible for testing and resetting the protective device without the use of a tool.

f) The protective device complies with the requirements for cord-connected GFCIs specified in the Standard for Ground-Fault Circuit-Interrupters, UL 943.

Exception No. 1: Flexible cord acceptable for use with hand-supported hair dryers as specified in Table 13.2 may be used.

Exception No. 2: Means for grounding need not be provided.

g) The convenience receptacle contact slots and grounding hole, if any, are located so that the line blades of a grounding-type plug cannot be mated by deliberate manual force, including manipulation, to deflect the grounding pin to the outside of the body of the protective device. An obstruction provided to comply with this requirement is to have minimum size and shape indicated by the shaded area in Figure 7.2. The obstructions are to be coplanar with the face or recessed by no more than 3/32 inch (2.4 mm). Constructions having rigid bodies, which are materials having a minimum hardness of 90 when measured on the "A" scale of a Shore Durometer, may have the indicated "A" dimensions reduced to 0.531 inch (13.5 mm).

h) The hair dryer immersion protective device complies with the abnormal operation test described in 46.10.1 – 46.10.5.

i) A permanent and legible marking is provided near the convenience receptacle to:

1) Specify the maximum current and wattage rating of an appliance intended to be plugged into the convenience receptacle as specified in 72.1.7,

2) Indicate that the appliance is to be unplugged immediately after use as specified in 72.10.1, and

3) Indicate that a direct plug-in (cordless) appliance is not to be used as specified in 72.10.1.

j) The instruction manual includes the operating instructions specified in 76.10.

This document is only permissible for use by Mohamed Waheed of Bechtel Corporation. 7/20/2021 6:27:09 PM

Documents
Document Sharing Hub
UL COPYRIGHTED MATERIAL – NOT AUTHORIZED FOR FURTHER REPRODUCTION OR DISTRIBUTION WITHOUT PERMISSION FROM UL INC.
Full document details: UL 859 2021

Figure 7.1

Plug-face dimensions for determining acceptable convenience receptacle insertion clearance

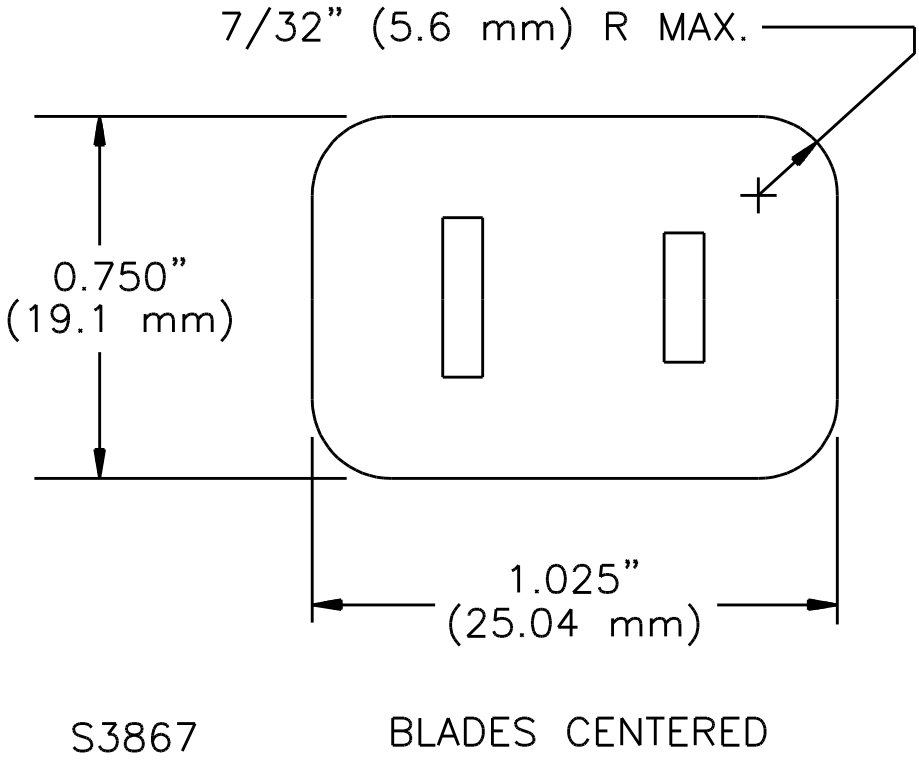

This document is only permissible for use by Mohamed Waheed of Bechtel Corporation. 7/20/2021 6:27:09 PM

UL COPYRIGHTED MATERIAL – NOT AUTHORIZED FOR FURTHER REPRODUCTION OR DISTRIBUTION WITHOUT PERMISSION FROM UL INC.

Documents
Document Sharing Hub

Full document details: UL 859 2021

Figure 7.2

Face of a 15-ampere, 125-volt convenience receptacle showing the smallest acceptable obstruction (shown shaded) for the grounding pin on the mating plug

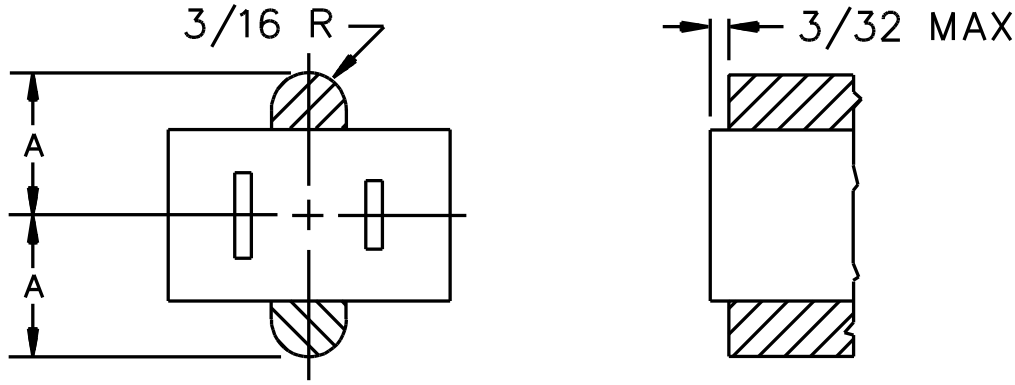

Obstruction for a 2-Pole, 2-Wire (Nongrounding) Receptacle

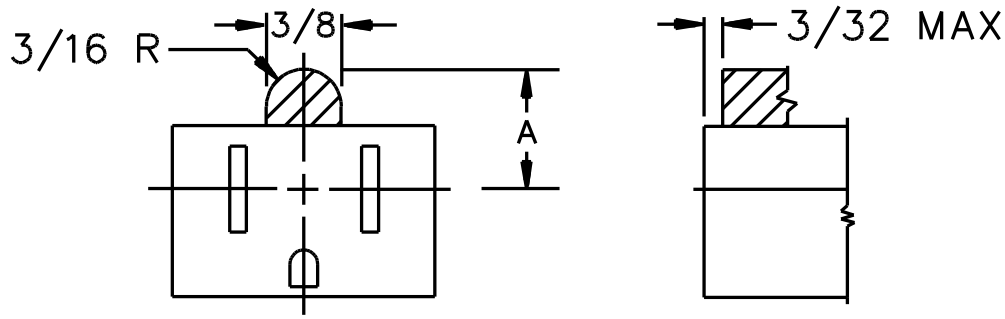

Obstruction for a 2-Pole, 3-Wire (Grounding) Receptacle

Inch	3/32	3/16
mm	2.4	4.8

Dimension A Inch	Dimension A mm	Shore Durometer Hardness (Scale A)
0.625	15.9	less than 90
0.531	13.5	90 or more

S3871

UL COPYRIGHTED MATERIAL – NOT AUTHORIZED FOR FURTHER REPRODUCTION OR DISTRIBUTION WITHOUT PERMISSION FROM UL INC.

Documents Document Sharing Hub

This document is only permissible for use by Mohamed Waheed of Bechtel Corporation. 7/20/2021 6:27:09 PM

Full document details: UL 859 2021

7.10 With regard to 7.9(f), each output circuit shall be considered if one is not representative of the other. For example, the short circuit test shall be conducted with each output short-circuited one at a time. The dielectric voltage-withstand test between line-connected circuits and load circuits shall include both load circuits. The temperature test shall be conducted with:

a) The hair dryer load circuit and the convenience receptacle each loaded to rated value and

b) The convenience receptacle loaded to 15 amperes with no load connected to the hair dryer load circuit.

8 Frame and Enclosure

8.1 General

8.1.1 The frame and enclosure of an appliance shall be sufficiently strong and rigid to resist the abuses likely to be encountered during service. The degree of resistance inherent in the appliance shall preclude total or partial collapse with the attendant reduction of spacings, loosening or displacement of parts, and other conditions which alone or in combination constitute an increase in the risk of fire, electric shock, or injury to persons.

8.1.2 Among the factors taken into consideration in evaluating an enclosure for acceptability are its:

a) Physical strength,

b) Resistance to impact,

c) Moisture absorptive properties,

d) Combustibility,

e) Resistance to corrosion, and

f) Resistance to distortion at temperatures to which the enclosure may be subjected under conditions of normal or abnormal use.

For a nonmetallic enclosure, all these factors are to be considered with respect to thermal aging.

8.2 Polymeric enclosures and parts

8.2.1 A polymeric enclosure shall comply with the Standard for Polymeric Materials – Use in Electrical Equipment Evaluations, UL 746C.

Exception: The Abnormal Operation Tests, Section 46, shall be applied in lieu of the abnormal and severe conditions requirements specified in UL 746C. For the polymeric enclosure of an appliance other than a hand-supported hair dryer, the use of HB material may require additional abnormal or severe conditions tests.

8.3 Metal enclosures

8.3.1 The minimum thickness of a metal enclosure shall be as indicated in Table 8.1.

This document is only permissible for use by Mohamed Waheed of Bechtel Corporation. 7/20/2021 6:27:09 PM

Documents
Document Sharing Hub
UL COPYRIGHTED MATERIAL – NOT AUTHORIZED FOR FURTHER REPRODUCTION OR DISTRIBUTION WITHOUT PERMISSION FROM UL INC.
Full document details: UL 859 2021

Table 8.1
Minimum thickness of enclosure metal

Metal	Thickness at small, flat, unreinforced surfaces and at surfaces that are reinforced by curving, ribbing, and the like (or are otherwise of a shape or size) to ensure adequate physical strength,		Thickness at surfaces to which a wiring system is to be connected in the field,		Thickness at relatively large unreinforced flat surfaces,	
	inch	(mm)	inch	(mm)	inch	(mm)
Die-cast	3/64	(1.2)	–	–	5/64	(2.0)
Cast malleable iron	1/16	(1.6)	–	–	3/32	(2.4)
Other cast metal	3/32	(2.4)	–	–	1/8	(3.2)
Uncoated sheet steel	0.026[a]	(0.66)	0.032	(0.81)	0.026	(0.66)
Galvanized sheet steel	0.029[a]	(0.74)	0.034	(0.86)	0.029	(0.74)
Nonferrous sheet metal	0.036[a]	(0.91)	0.045	(1.14)	0.036	(0.91)

[a] Thinner sheet metal may be used if determined to be acceptable when the enclosure is evaluated under considerations such as those specified in 8.1.2.

8.4 Corrosion resistance

8.4.1 Iron and steel parts shall be made corrosion resistant by painting, galvanizing, plating, or other equivalent means if the malfunction of such unprotected parts would result in a risk of fire, electric shock, or injury to persons.

Exception No. 1: In constructions in which the oxidation of iron or steel due to the exposure of the metal to air and moisture will not be appreciable – thickness of metal and temperature also being factors – surfaces of sheet steel and cast-iron parts within an enclosure not required to be made corrosion resistant.

Exception No. 2: Bearings, lamination, or minor parts of iron or steel, such as washers, screws, and similar parts are not required to be made corrosion resistant.

8.4.2 A container for liquid shall be made resistant to the possible corrosive effect of the liquid intended to be used in the container.

8.5 Accessibility of live parts

8.5.1 An electrical part of an appliance shall be located or enclosed so that unintentional contact with any uninsulated live part and internal wiring will be prevented.

8.5.2 A part of the outer enclosure that is capable of being opened or removed by the user without using a tool (to attach an accessory, to make an operating adjustment, to replace a fuse, or for other reasons) is to be opened or removed when determining compliance with 8.5.1.

8.5.3 The enclosure of an appliance shall have no opening that permits a probe, as illustrated in Figure 8.1, to touch any part that involves a risk of electric shock.

This document is only permissible for use by Mohamed Waheed of Bechtel Corporation. 7/20/2021 6:27:09 PM

Documents
Document Sharing Hub
UL COPYRIGHTED MATERIAL – NOT AUTHORIZED FOR FURTHER REPRODUCTION OR DISTRIBUTION WITHOUT PERMISSION FROM UL INC.
Full document details: UL 859 2021

Figure 8.1

Articulate probe with web stop

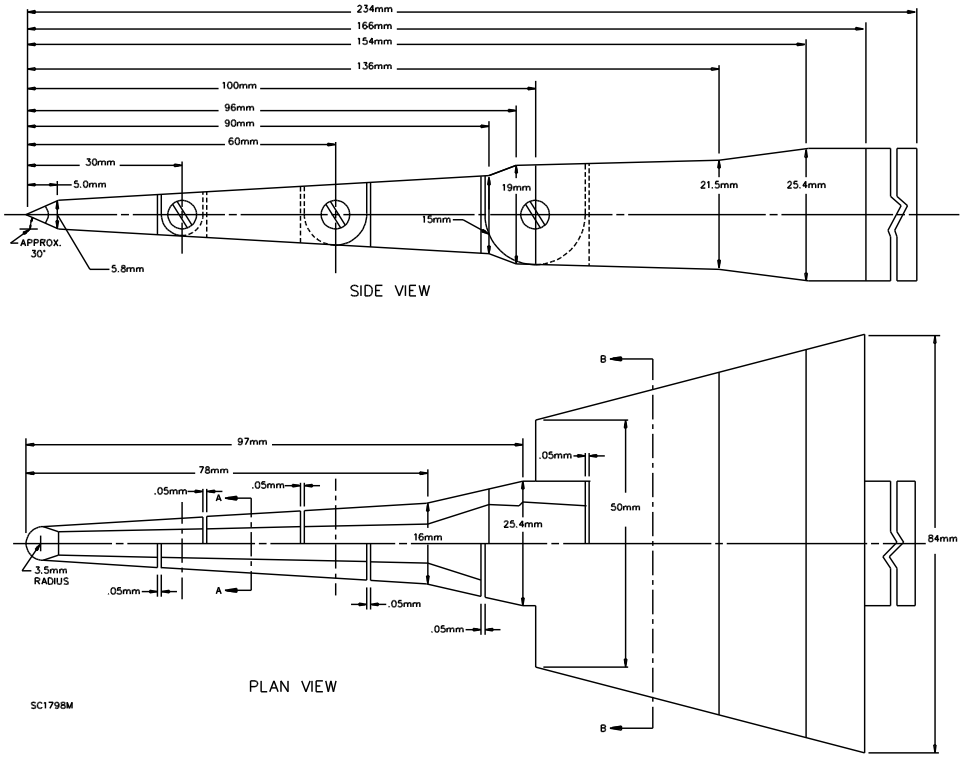

Figure 8.1 (Cont'd)

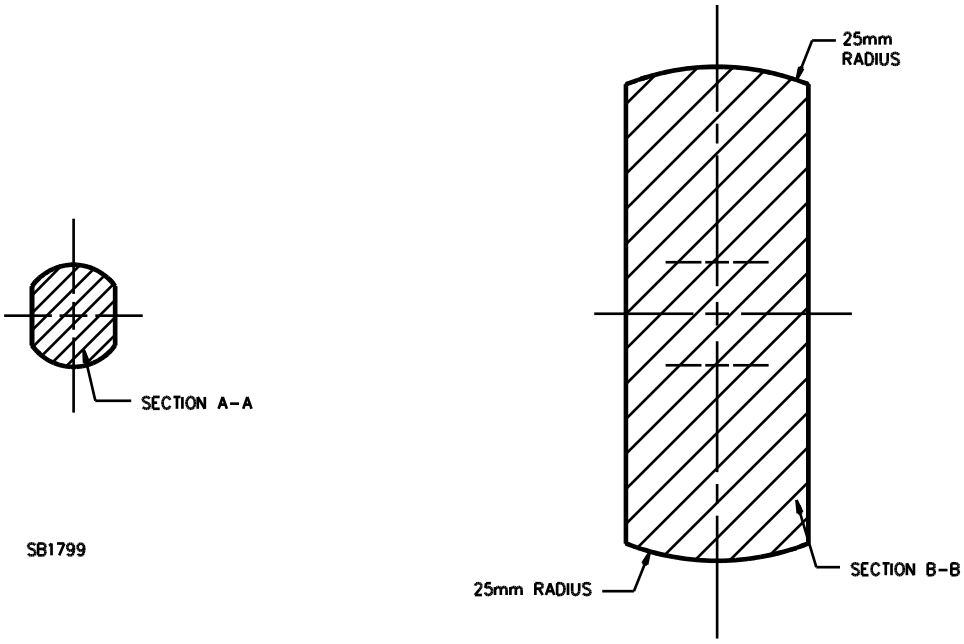

This document is only permissible for use by Mohamed Waheed of Bechtel Corporation. 7/20/2021 6:27:09 PM

UL COPYRIGHTED MATERIAL – NOT AUTHORIZED FOR FURTHER REPRODUCTION OR DISTRIBUTION WITHOUT PERMISSION FROM UL INC.

Documents
Document Sharing Hub

8.5.4 With regard to 8.5.3, the probe is to be articulated into any configuration and rotated or angled to any position before, during, or after insertion into the opening. The penetration shall be to any depth allowed by the opening size, including minimal depth combined with maximum articulation. The probe shall be applied with the minimum force required to determine accessibility and not as an instrument to evaluate the strength of a material.

8.5.5 An opening that will permit entrance of a 1-inch (25.4-mm) diameter rod is permitted when it complies with the conditions shown in Figure 8.2.

Figure 8.2

Opening in enclosure

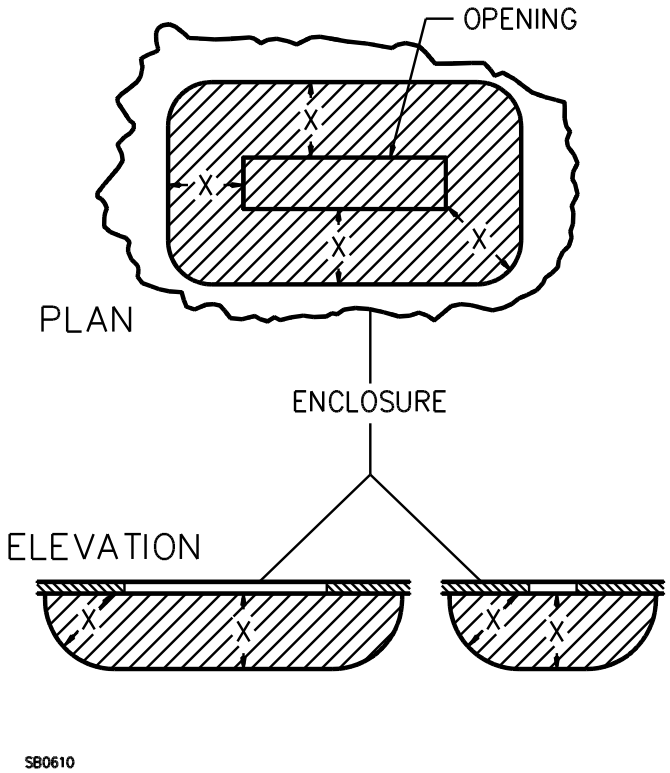

NOTE – The opening is acceptable if, within the enclosure, there is no uninsulated live part or film-coated wire:

a) Less than X distance from the perimeter of the opening, as well as

b) Within the volume generated by projecting the perimeter X distance normal to its plane.

X equals five times the diameter of the largest diameter rod that can be inserted through the opening, but not less than 6-1/16 inches (154 mm).

This document is only permissible for use by Mohamed Waheed of Bechtel Corporation. 7/20/2021 6:27:09 PM

UL COPYRIGHTED MATERIAL – NOT AUTHORIZED FOR FURTHER REPRODUCTION OR DISTRIBUTION WITHOUT PERMISSION FROM UL INC.

Documents
Document Sharing Hub

8.5.6 A live part of a limited-energy circuit in 5.30 requires the same degree of protection against unintentional contact as a live part of a line voltage circuit.

8.5.7 Insulated brush caps do not require additional enclosure.

8.5.8 An area of an enclosure that is provided with a group of openings or with a guarded opening (such as a grille, louver, or screen) is to be subjected to the strength of enclosure test described in 35.1.

8.5.9 The enclosure of a remotely or automatically controlled appliance shall reduce the risk of molten metal, burning insulation, or flaming particles, from falling on combustible materials, including the surface upon which the appliance is supported.

8.5.10 The requirement in 8.5.9 will necessitate the use of a barrier of material that is resistant to combustion:

a) Under a motor unless:

1) The structural parts of the motor or of the appliance provide the equivalent of such a barrier;

2) The protection provided with the motor is such that no burning insulation or molten material falls to the surface that supports the appliance when the motor is energized under each of the following fault conditions:

i) Main winding opened;

ii) Starting winding opened;

iii) Starting switch short-circuited; and

iv) For a permanent split capacitor motor, the capacitor short-circuited (the short circuit is to be applied before the motor is energized, and the rotor is to be locked);

or

3) The motor is provided with a thermal motor protector (a protective device that is sensitive to temperature and current) that will prevent the temperature of the motor windings from exceeding 125°C (257°F) under the maximum load under which the motor will run without causing the protector to cycle, and from exceeding 150°C (302°F) with the rotor of the motor locked.

b) Under wiring, unless the wiring is provided with flame-retardant rating VW-1 (FR-1), or wiring contained within sleeving rated VW-1, or the equivalent.

8.5.11 The requirement in 8.5.9 will also necessitate that a switch, relay, solenoid, or the similar part be individually and completely enclosed unless there is no opening in the bottom of the appliance enclosure, or it can be shown that malfunction of the component would not result in a risk of fire.

Exception: Terminals of a switch, relay, solenoid, or the like are not required to be individually and completely enclosed.

8.5.12 The barrier specified in 8.5.10 shall be horizontal, shall be located as indicated in Figure 8.3, and shall have an area no less than that described in Figure 8.3. An opening such as for drainage or ventilation, is permitted in the barrier if such an opening would not permit molten metal, burning insulation, or flaming particles to fall on combustible material.

This document is only permissible for use by Mohamed Waheed of Bechtel Corporation. 7/20/2021 6:27:09 PM

Documents
Document Sharing Hub

UL COPYRIGHTED MATERIAL – NOT AUTHORIZED FOR FURTHER REPRODUCTION OR DISTRIBUTION WITHOUT PERMISSION FROM UL INC.

Full document details: UL 859 2021

Figure 8.3

Location and extent of barrier

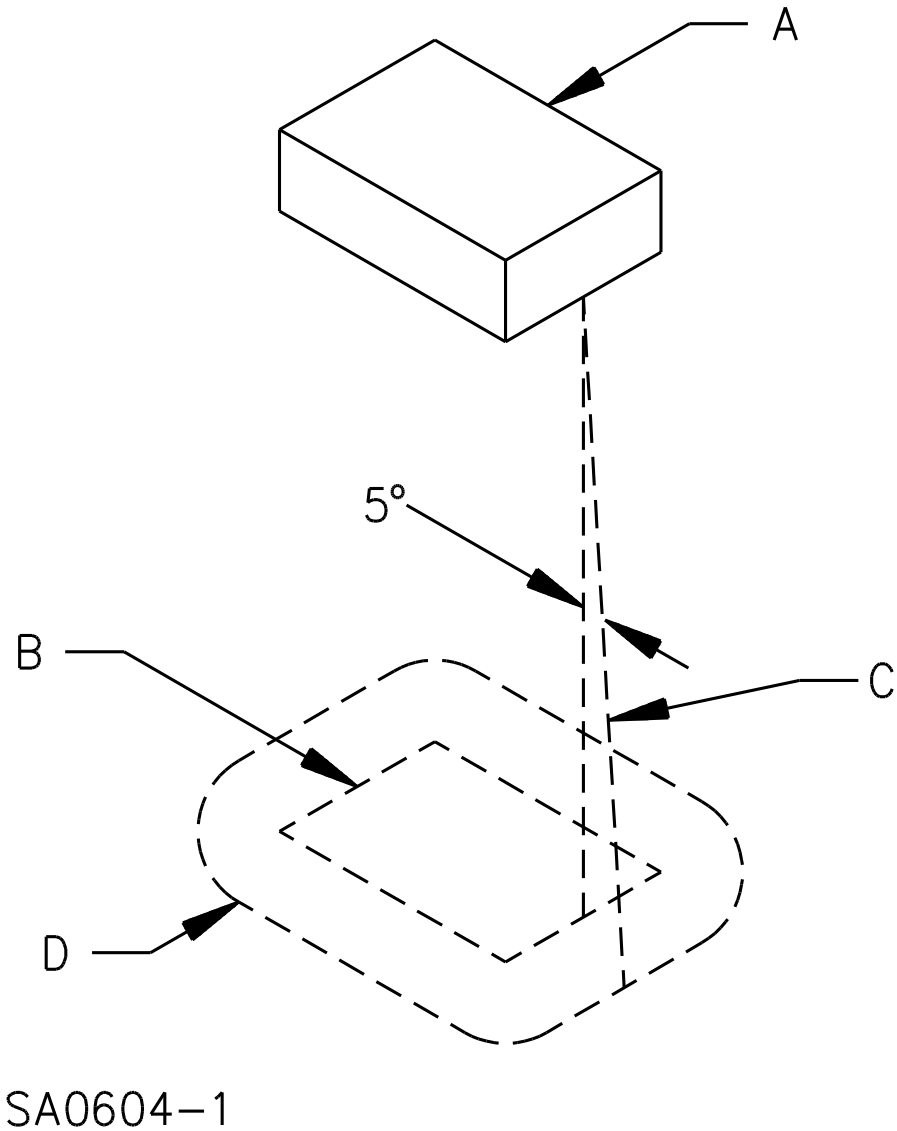

A – Region to be shielded by barrier. This will consist of the entire component if it is not otherwise shielded, and will consist of the unshielded portion of a component which is partially shielded by the component enclosure or equivalent.

B – Projection of outline of component on horizontal plane.

C – Inclined line which traces out minimum area of barrier. When moving, the line is always:

1) Tangent to the component,

2) 5 degrees from the vertical, and

3) Oriented so that the area traced out on a horizontal plane is maximum.

D – Location (horizontal) and minimum area for barrier. The area is that included inside the line of intersection traced out by the inclined line C and the horizontal plane of the barrier.

This document is only permissible for use by Mohamed Waheed of Bechtel Corporation. 7/20/2021 6:27:09 PM

Documents
Document Sharing Hub

UL COPYRIGHTED MATERIAL – NOT AUTHORIZED FOR FURTHER REPRODUCTION OR DISTRIBUTION WITHOUT PERMISSION FROM UL INC.

Full document details: UL 859 2021

8.6 Doors and covers

8.6.1 The door or cover of an enclosure shall be provided with means for holding it in the closed position.

8.6.2 The door or cover of an enclosure shall be hinged (or similarly attached) if it gives access to any overload protective device, the functioning of which requires renewal, or if it is necessary to open the cover in connection with the operation of the protective device. Such a door or cover shall be provided with a latch or similar device and shall be tight-fitting or shall overlap the surface of the enclosure around the opening.

9 Reduction of Risk of Injury to Persons

9.1 General

9.1.1 Materials that are relied upon to reduce the risk of injury to persons shall have such properties as to meet the demand of intended loading conditions.

9.1.2 Asbestos shall not be used.

9.1.3 A moving part that can result in a risk of injury to persons shall be enclosed or provided with other means to reduce unintentional contact.

9.1.4 With respect to the requirement specified in 9.1.3, the construction and intended use of the appliance are to be considered in investigating a guard or enclosure. Among the factors to be evaluated in evaluating the acceptability of an exposed moving part are:

a) The degree of exposure;

b) The sharpness of the moving part; and

c) The possibility of fingers, arms, hair, or clothing being drawn into the moving part (such as at points where gears mesh, where belts travel onto a pulley, or where moving parts close in a pinching or shearing action).

9.1.5 An appliance, or any item furnished with an appliance, shall have no sharp edge, burr, point, or spike inside or outside the appliance that results in injury to persons during intended use and maintenance.

9.1.6 On an appliance adjustable for height, means shall be provided for holding the upper parts securely in position. Means shall also be provided to prevent the upper part from descending rapidly if the securing means loosens or fails to operate as intended.

9.1.7 A hand-supported hair dryer shall have each air intake opening provided with a screen or equivalent means so that there are no openings larger than 0.004 square inch (0.03 cm^2).

9.2 Appliances with reservoirs

9.2.1 An appliance in which liquid reaches a temperature greater than 46°C (114.8°F) shall comply with the requirements specified in 9.2.2 – 9.2.4, 36.1 – 36.3, and 37.2.

Exception No. 1: An electrode-type appliance is not required to comply with these requirements. For requirements for an electrode-type appliance, see Sections 78 – 84.

This document is only permissible for use by Mohamed Waheed of Bechtel Corporation. 7/20/2021 6:27:09 PM

Documents
Document Sharing Hub

UL COPYRIGHTED MATERIAL – NOT AUTHORIZED FOR FURTHER REPRODUCTION OR DISTRIBUTION WITHOUT PERMISSION FROM UL INC.

Full document details: UL 859 2021

Exception No. 2: A wax depilatory appliance is not required to comply with the requirements specified in 9.2.3, 9.2.4, and 36.1 – 36.3.

9.2.2 The construction of the appliance shall reduce the risk of injury to persons under conditions of intended use. Openings through which liquid can be emitted shall not be provided unless such openings are needed to perform an operating function.

9.2.3 An appliance with a vessel or container with a capacity of more than 32 fluid ounces (946 mL) shall be provided with a fully inserting or a lock-on lid.

9.2.4 If any part of an appliance requires assembly (for example, engagement of a twist-lock part), then improper assembly that results in a risk of injury to persons shall be clearly visible to the user.

9.3 Wax depilatory appliances

9.3.1 The maximum temperature of the wax, measured as described in 44.2.1 – 44.2.3, shall not exceed 75°C (167°F).

9.3.2 The maximum temperature rise of surfaces that may be contacted by the user shall be as specified in Table 44.2.

9.3.3 When there are multiple heat settings (for example, a setting for maintaining molten wax at the intended temperature for application to all of the skin and a higher heat setting for quick melting of solid wax), the appliance shall comply with all of the following:

a) If the wax is capable of being heated above 75°C (167°F) for quick melting, the reservoir in which the wax is so heated shall be provided with a nonremovable, self-closing lid or cover.

b) A visible overheat condition indicator shall be provided. Such an indicator shall indicate when the wax temperature exceeds 75°C. This indicator shall be separate and independent of any other temperature indicator (for example, an indicator light whose functioning depends upon the setting of an adjustable thermostat) which may be provided. See 44.2.3, 74.7(l)(13), and 76.8(e).

c) A marking (such as a number or symbol) shall be provided adjacent to each heat selector position. A permanent marking shall be provided on the appliance in accordance with 72.8.1(b), and the Use and Care Instructions shall warn the user against applying wax that has been heated at a setting higher than the intended setting [see 74.7(l)(13)].

d) A part of a temperature control that is user-operated (an adjustment knob or similar part) shall be constructed so that deliberate and positive action by the operator is required to select a heat setting or to change from one heat setting to another. A construction that requires two separate and distinct motions by the user (such as push and turn) is an example of a control that complies with this requirement.

9.3.4 With reference to 9.3.3(a), a nonremovable cover is one which requires special tools (tools not available to other than service personnel) for removal. A self-closing cover is a cover that returns to its fully closed position without any action on the part of the user other than releasing it from any opened position while the appliance is supported by a flat, horizontal surface.

9.3.5 In accordance with 46.9.5 and 76.8, if the malfunction of a temperature-regulating control increases the application temperature of the wax above 75°C (167°F), visible means, such as an indicator light, shall be provided to inform the user of an overheat condition.

Exception: A visible overheat condition indicator is not required if a thermal cutoff or a trip-free manual-reset thermostat operates upon short-circuiting of the temperature-regulating control. The temperatures

This document is only permissible for use by Mohamed Waheed of Bechtel Corporation. 7/20/2021 6:27:09 PM

Documents Document Sharing Hub

UL COPYRIGHTED MATERIAL – NOT AUTHORIZED FOR FURTHER REPRODUCTION OR DISTRIBUTION WITHOUT PERMISSION FROM UL INC.

Full document details: UL 859 2021

attained by the wax, and surfaces of the appliance that are handled or contacted by the user during intended use, at the time the thermal cutoff or thermostat opens shall not present a risk of burn as determined by an appropriate investigation. The investigation shall include consideration of the length of time that temperatures remain above the specified limits, the thermal inertia of the materials involved, and similar factors.

10 Mechanical Assembly

10.1 An appliance that involves a motor or other vibrating part shall be assembled such that the appliance will not be affected adversely by the vibration. Brush caps shall be tightly threaded or otherwise constructed to prevent loosening.

10.2 A switch (other than a through-cord switch), lampholder, receptacle, motor-attachment plug, or similar component shall be mounted securely and shall be prevented from turning.

Exception No. 1: Turn-prevention means for a switch are not required, when all the following conditions are met:

a) The switch is of the plunger or other type that does not tend to rotate when operated (a toggle switch is subject to forces that tend to rotate the switch during intended operation of the switch);

b) The means of mounting the switch is such that the operation of the switch will not result in the switch becoming loosened;

c) The spacings are not reduced below the minimum required values, if the switch does rotate; and

d) Intended operation of the switch is by mechanical means rather than by direct contact by persons.

Exception No. 2: A lampholder in which the lamp cannot be replaced (such as a neon pilot or indicator light in which the lamp is sealed in by a nonremovable jewel) is not required to be prevented from turning if the rotation cannot reduce spacings below the minimum required values.

10.3 Friction alone shall not be relied on for turn-prevention as required in 10.2. A lock-washer, applied as intended, is a reliable means of turn-prevention of a device with a single-hole mounting means.

10.4 A positive means shall be provided to prevent parts of an appliance from turning with respect to each other if such turning would result in reduction of spacings, twisting of wires, and the like.

Exception: If such parts depend upon 3/8 inch (9.5 mm) or larger pipe threads, no additional means to prevent turning need be provided.

10.5 A fastener that secures the insulating tip of a curling iron, a heated brush, or a similar appliance shall be constructed, fastened, or located so as to prevent the fastener from becoming loosened if such loosening can result in a risk of fire or electric shock.

10.6 Compliance with the requirement specified in 10.5 may be accomplished by use of:

a) Staked and upset screws,

b) Screws with properly applied lock washers,

c) Press fitting of the insulating tip into place, or

d) Other equivalent means.

This document is only permissible for use by Mohamed Waheed of Bechtel Corporation. 7/20/2021 6:27:09 PM

Documents
Document Sharing Hub

UL COPYRIGHTED MATERIAL – NOT AUTHORIZED FOR FURTHER REPRODUCTION OR DISTRIBUTION WITHOUT PERMISSION FROM UL INC.

Full document details: UL 859 2021

A polymeric material relied upon to prevent the fasteners from loosening shall have the required mechanical strength, resistance to heat, and dimensional stability. All of these properties are to be considered with respect to thermal aging.

10.7 If any part of a metal spring of a hair clamp of a curling iron or a similar appliance can become loose inside the enclosure of electrical parts as a result of breakage of the spring, the construction shall be such that electrical spacings will not be reduced.

10.8 Compliance with the requirement specified in 10.7 may be accomplished by

a) Locating all parts of the spring outside the enclosure of electrical parts,

b) Using barriers,

c) Using physical restraints, or

d) Using other equivalent means.

10.9 The temperature sensor of a temperature controller, a thermostat, a thermal cutoff, or a similar device shall be secured in place.

11 Stability

11.1 A floor- or counter-supported appliance shall be constructed such that it will not be overturned when tested in accordance with 37.1.

Exception: An appliance whose overturning during intended use will not present a risk of burns or injury to persons need not be tested.

11.2 With regard to 11.1, a hand-supported hair dryer provided with a stand for conversion into a counter-supported hair dryer is to be evaluated as a hand-supported appliance and is not to be subjected to the stability test.

11.3 A wax depilatory appliance shall be tested and the results shall be evaluated as described in 37.2, except that the wax may be in any combination of solid and liquid states anticipated during the intended operation of the appliance. Any movable parts or covers are to be in the positions that result in the most adverse conditions of use.

Exception: The test need not be conducted on a construction for which there is no possibility of molten wax spilling from its container under any condition of use, such as constructions in which the wax material is contained within completely enclosed wax applicators.

12 Hanging and Mounting Means

12.1 A wall-hung or a wall-mounted appliance shall withstand a force as described in 59.1 without evidence of damage to the mounting surface, to the hanging means, to the mounting means, or to the appliance that results in the risk of electric shock, fire, or injury to persons.

12.2 A cord-connected appliance that is provided with keyhole slots, notches, hanger holes, or similar feature, for hanging the appliance on a wall, shall be:

a) Provided with the necessary hardware for hanging the appliance in accordance with the installation instructions and

This document is only permissible for use by Mohamed Waheed of Bechtel Corporation. 7/20/2021 6:27:09 PM

Documents
Document Sharing Hub

UL COPYRIGHTED MATERIAL – NOT AUTHORIZED FOR FURTHER REPRODUCTION OR DISTRIBUTION WITHOUT PERMISSION FROM UL INC.

Full document details: UL 859 2021

b) Constructed in such a manner that the hanging means (such as screws) shall not be accessible without removing the appliance from the supporting means.

12.3 When determining compliance with 12.2, any part of the enclosure or barriers that can be removed without the use of tools to gain access to the hanging means is to be removed.

12.4 A keyhole slot, notch, or hanger hole shall be located so that the supporting screws or similar hardware cannot damage any electrical insulation or reduce spacings to current-carrying parts of the appliance.

12.5 A permanently installed wall-mounted appliance shall be provided with the necessary hardware for mounting in accordance with the installation instructions.

Exception: Small parts commonly available for the mounting of the appliance need not be provided if the installation instructions refer to such parts as specified in 75.4.

13 Supply Connections

13.1 Permanently-connected appliances

13.1.1 An appliance intended for permanent connection to a power supply, either by being fastened in place, located in a dedicated space, or both, shall have provision for connection of one of the wiring systems that is acceptable for the appliance.

Exception: If an appliance is not intended for permanent connection to a power supply, but is intended to be either fastened in place, located in a dedicated space, or both, it may be provided with a short length of flexible cord in accordance with 13.3.1.1 – 13.3.1.3 and 13.3.1.6 and with an attachment plug for supply connection. The investigation of such a feature will include consideration of the utility of the appliance and the reasons for having it detachable from its supply source by means of the attachment plug.

13.1.2 The location of a terminal box or compartment in which a power supply connection to a permanently-connected appliance is to be made shall be such that the connection may be readily inspected after the appliance is installed as intended.

13.1.3 A terminal compartment intended for the connection of a supply raceway shall be attached to the appliance so as to be prevented from turning.

13.2 Wiring terminals

13.2.1 An appliance intended for permanent connection to the power supply shall be provided with wiring terminals or leads for connection of supply circuit conductors. Such wiring terminals or leads shall accommodate conductors having an ampacity of not less than 125 percent of the appliance current rating when the load is continuous (3 hours or more), and not less than the appliance current rating when the load is intermittent.

13.2.2 For the purpose of these requirements, wiring terminals are considered to be terminals to which power supply or control connections will be made in the field when the appliance is installed.

13.2.3 A wiring terminal shall be provided with a soldering lug or with a pressure terminal connector securely fastened in place (for example, firmly bolted or held by a screw).

Exception: A wire-binding screw may be used at a wiring terminal intended to accommodate a 10 AWG (5.3 mm^2) or smaller conductor if upturned lugs or the equivalent are provided to hold the wire in position.

This document is only permissible for use by Mohamed Waheed of Bechtel Corporation. 7/20/2021 6:27:09 PM

Documents Document Sharing Hub

UL COPYRIGHTED MATERIAL – NOT AUTHORIZED FOR FURTHER REPRODUCTION OR DISTRIBUTION WITHOUT PERMISSION FROM UL INC.

Full document details: UL 859 2021

13.2.4 A wiring terminal shall be prevented from turning or shifting in position by means other than friction between surfaces. This may be accomplished by two screws or rivets; by square shoulders or mortices; by a dowel pin, lug, or offset; by a connecting strap or clip fitted into an adjacent part; or by an equivalent means.

13.2.5 A wire-binding screw at a wiring terminal shall be no smaller than No. 10 (4.8 mm).

Exception: A No. 8 (4.2 mm) screw may be used at a terminal intended only for the connection of a 14 AWG (2.1 mm^2) conductor, and a No. 6 (3.5 mm) screw may be used for the connection of a 16 AWG (1.3 mm^2) or 18 AWG (0.82 mm^2) control-circuit conductor.

13.2.6 A terminal plate tapped for a wire-binding screw shall be of metal not less than 0.050 inch (1.27 mm) thick. There shall be two or more full threads in the metal, which may be extruded if necessary to provide the threads.

Exception: A plate less than 0.050 inch thick, but not less than 0.030 inch (0.762 mm) thick, is acceptable if the tapped threads are determined to have equivalent mechanical strength.

13.2.7 Upturned lugs or a cupped washer shall be capable of retaining a conductor of the size specified in 13.2.1, but not smaller than 14 AWG (2.1 mm^2), under the head of the screw or the washer.

13.2.8 A wire-binding screw shall thread into metal.

13.2.9 An appliance intended for connection to a grounded power supply conductor and using a:

a) Lampholder or element holder of the Edison screw shell type,

b) Single pole switch, or

c) Single pole automatic control

shall have one terminal or lead intended for connection of the grounded conductor of the supply circuit. The terminal or lead intended for grounded connection shall be the one that is connected to the screw shell of a lampholder or element holder and that has no connection to a single pole switch or single pole automatic control.

Exception: With regard to connection of a single pole automatic control, the requirements specified in 24.1 shall apply.

13.2.10 A terminal intended for the connection of a grounded circuit conductor shall be made of, or plated with, a metal substantially white in color and shall be readily distinguishable from the other terminals. If not of such metal, the identification of that terminal shall be clearly shown in some other manner, such as on an attached wiring diagram. A lead intended for the connection of a grounded circuit conductor shall be finished to show a white or gray color and shall be readily distinguishable from the other leads.

13.2.11 The free length of a lead inside an outlet box or wiring compartment shall be 6 inches (152.4 mm) or more if the lead is intended for field connection to an external circuit.

Exception: A lead may be less than 6 inches long if it is evident that the use of a longer lead will result in a risk of fire, electric shock, or injury to persons.

This document is only permissible for use by Mohamed Waheed of Bechtel Corporation. 7/20/2021 6:27:09 PM

Documents
Document Sharing Hub
UL COPYRIGHTED MATERIAL – NOT AUTHORIZED FOR FURTHER REPRODUCTION OR DISTRIBUTION WITHOUT PERMISSION FROM UL INC.
Full document details: UL 859 2021

13.2.12 The surface of an insulated lead intended solely for the connection of an equipment-grounding conductor shall be green, with or without one or more yellow stripes, and no other lead shall be so identified.

13.2.13 A wire-binding screw intended for the connection of an equipment grounding conductor shall have a green colored head that is hexagonal shaped, slotted, or both. A pressure wire connector shall be plainly identified as such by being marked "G," "GR," "GND," "Grounding," or the like or by a marking on the wiring diagram provided on the appliance. The wire-binding screw or pressure wire connector shall be located so that it is unlikely to be removed during servicing of the appliance.

13.2.14 A terminal solely for connection of an equipment grounding conductor shall be capable of securing a conductor of the correct size for that purpose.

13.3 Cord-connected appliances

13.3.1 Cords and plugs

13.3.1.1 An appliance shall be provided with a length of flexible cord in accordance with Table 13.1 and an attachment plug for connection to the supply circuit. A coiled cord shall not be used with a floor- or counter-supported appliance where such use would present a risk of burn, fire, electric shock, or injury to persons (for example, the appliance being pulled off a table by the force of the cord). The cord length is measured from the point of cord entry into the enclosure, or into the wiring device at the appliance end of the cord, to the face of the attachment plug. The length for a coiled cord is to be measured with the cord in an uncoiled position.

Exception: When a power supply cord contains a right-angle attachment plug, the cord length shall be measured from the point of cord entry into the enclosure, or into the wiring device at the appliance end of the cord, to the edge of the line blades or grounding pin nearest the point of cord entry into the attachment plug as shown in Figure 13.1.

Table 13.1
Cord lengths for specific conditions

Type of appliance	Cord length			
	Minimum,		Maximum,	
	feet	(m)	feet	(m)
Appliance supported by hand or by table or counter top	5	(1.52)	9	(2.74)
Wall-hung appliances with attached appliance supported by hand	5[a]	(1.52)	9[a]	(2.74)
	2[b]	(0.61)	3[b]	(0.91)
Appliance usually supported by head, shoulder, or back	6	(1.83)	12	(3.66)
Any appliance having a jacketed cord	See note c		Not specified	

[a] Between wall unit and hand unit.
[b] Between wall unit and receptacle.
[c] As specified elsewhere in this table or in 13.3.1.1.

This document is only permissible for use by Mohamed Waheed of Bechtel Corporation. 7/20/2021 6:27:09 PM

Documents
Document Sharing Hub
UL COPYRIGHTED MATERIAL – NOT AUTHORIZED FOR FURTHER REPRODUCTION OR DISTRIBUTION WITHOUT PERMISSION FROM UL INC.
Full document details: UL 859 2021

Figure 13.1

Power supply cord length measurement for right angle attachment plugs

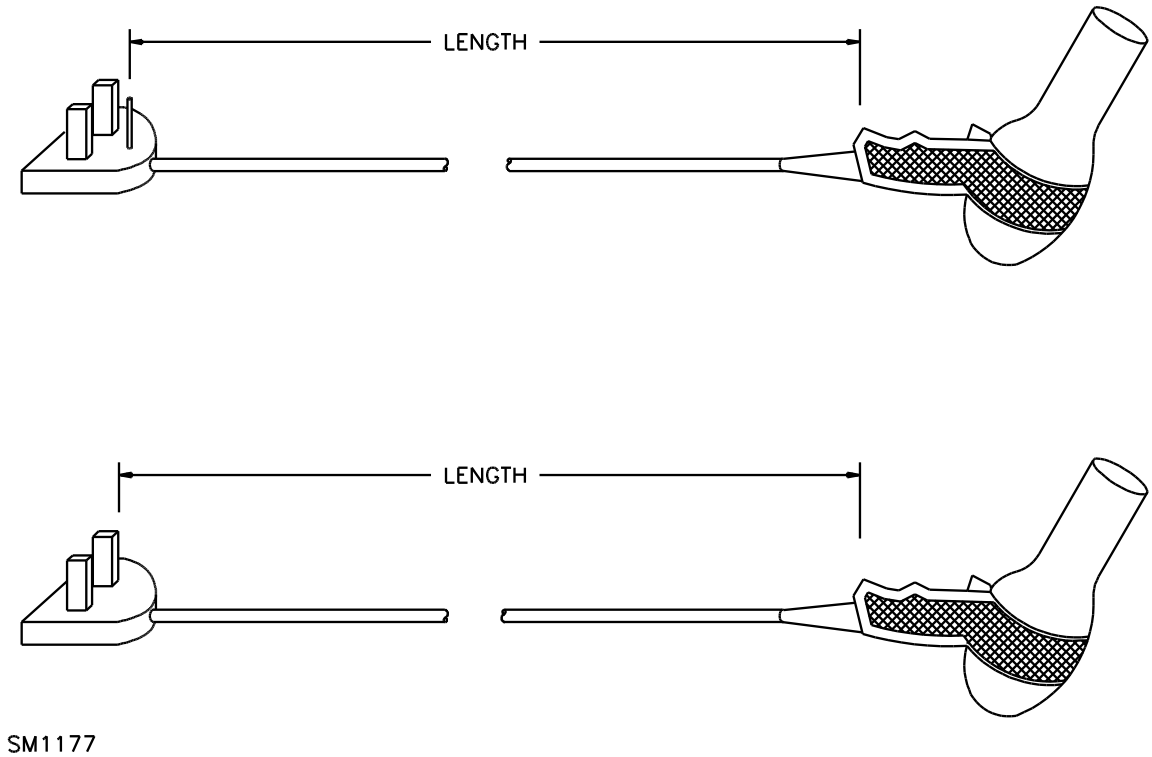

13.3.1.2 The flexible cord:

a) May be permanently attached to the appliance or

b) For other than a hand-supported appliance, may be in the form of a detachable power supply cord with means for connection to the appliance.

Examples of the means for connection are an appliance plug, a flatiron plug, or a cord connector cooperating with pin or blade terminals on the appliance.

Exception: Hand-supported appliances other than appliances provided with integral GFCI or other immersion protective devices, whether required or not, may be provided with a detachable power supply cord if all the following conditions are met:

a) When inserted into the appliance, the detachable power supply cord shall be provided with a positive means to securely hold and lock it in place during normal use;

b) Disengaging the locking feature requires positive actuation by the user by means independent of normal handling and use. Friction is not considered to be an acceptable locking means;

c) While attached to the appliance, the power supply cord shall comply with construction and performance requirements applicable to non-detachable power supply cords detailed in this standard;

d) The construction of the appliance coupling shall comply with the construction requirements of 13.3.1.14 or 13.3.1.15 and with the performance requirements of 65.4 or 65.6, as applicable to the construction;

This document is only permissible for use by Mohamed Waheed of Bechtel Corporation. 7/20/2021 6:27:09 PM

Documents
Document Sharing Hub

UL COPYRIGHTED MATERIAL – NOT AUTHORIZED FOR FURTHER REPRODUCTION OR DISTRIBUTION WITHOUT PERMISSION FROM UL INC.

Full document details: UL 859 2021

e) The appliance coupling and mating connector shall be a non-standard configuration. Flatiron, appliance (standard or jumbo), motor attachment, ANSI/NEMA WD6, Standard for Wiring Devices – Dimensional Requirements, or IEC 60320-1, Appliance couplers for household and similar general purposes – Part 1: General requirements, configurations are not considered to be acceptable;

f) In addition to the requirements detailed in this standard, the detachable power supply cord shall comply with the applicable requirements for special purpose detachable power supply cords cited in the Standard for Cord Sets and Power-Supply Cords, UL 817;

g) The detachable supply cord shall be a minimum 18 AWG (0.82 mm^2), SPT-2 cord type; and

h) The drop impact test of 65.2 is to be conducted with acceptable results.

13.3.1.3 The ampacity of the cord (as specified in Table 400.5(A) of the National Electrical Code, ANSI/NFPA 70) and of the plug shall not be less than the current rating of the appliance. The cord and the plug voltage rating shall be at least equal to the rated voltage of the appliance.

13.3.1.4 With respect to 13.3.1.3, the voltage rating of a dual voltage appliance is deemed to be that to which the appliance is set when it is shipped from the factory.

13.3.1.5 If a dual-voltage appliance is provided with an adapter for connection to an alternate supply source, the adapter shall comply with the applicable requirements in the Standard for Attachment Plugs and Receptacles, UL 498.

13.3.1.6 The flexible cord shall be of a type indicated in Table 13.2 or the equivalent.

Table 13.2
Required types of cord and applicable limitations on their use

Appliance on which the cord is to be used	Required cords where temperatures higher than 121°C (250°F) are attained on any surface the cord can touch	Required cords where 121°C (250°F) or lower temperatures are attained on any surface the cord can touch
Floor supported	HPN[a], HSJ, HSJO, HS, kHSO	SP-2[a], SPE-2[a], SPT-2[a], SV[a], SVE[a], SVO[a], SVOO[a], SVT[a], SVTO[a], SVTOO[a] SJ, SJE, SJO, SJOO, SJT, SJTO, SJTOO, S, SE, SO, SOO, ST, STO, STOO
Hand-supported hair dryers, heated air curling irons and brushes, and, except as noted in Note (b), counter-supported appliances	HPD, HPN, HSJ, HSJO	SP-2, SPE-2, SPT-2, SV, SVE, SVO, SVOO, SVT, SVTO, SVTOO, SJ, SJE, SJO, SJOO, SJT, SJTO, SJTOO, SP-1[b], SPE-1[b], SPT-1[b]
Facial saunas	–	SP-1, SPE-1, SPT-1
Combs	SP-2, SPE-2 or SPT-2, HPN	SP-2, SPE-2 or SPT-2, HPN
Curling irons and brushes, manicure and pedicure sets, hair crimping and hair straightening irons, and similar hand-supported appliances	TPT[c], SPT-1, XT[d], HPD	TPT[c], SP-1, SPE-1, SPT-1, XT[d], HPD

[a] Acceptable if the following conditions are met:

1) The unit is not provided with rollers, castors, or similar parts, and

2) The point of cord entry to the unit is at least 3 feet (0.91 m) above the floor with the unit in any operating configuration.

Table 13.2 Continued on Next Page

This document is only permissible for use by Mohamed Waheed of Bechtel Corporation. 7/20/2021 6:27:09 PM

Documents
Document Sharing Hub

UL COPYRIGHTED MATERIAL – NOT AUTHORIZED FOR FURTHER REPRODUCTION OR DISTRIBUTION WITHOUT PERMISSION FROM UL INC.

Full document details: UL 859 2021

Table 13.2 Continued

Appliance on which the cord is to be used	Required cords where temperatures higher than 121°C (250°F) are attained on any surface the cord can touch	Required cords where 121°C (250°F) or lower temperatures are attained on any surface the cord can touch
[b] Acceptable on counter-supported appliances weighing 1/2 pound (0.23 kg) or less. The weight is to be determined without the power supply cord. [c] Acceptable for use with appliances rated 50 watts or less and weighing 1/2 pound (0.23 kg) or less. The weight is to be determined without the power supply cord. [d] Minimum 20 AWG (0.52 mm^2) parallel 2-conductor construction required.		

13.3.1.7 The attachment plug of a cord-connected appliance, and the integral blades of a direct plug-in appliance, provided with a 15- or 20-ampere general-use receptacle shall be of the 3-wire grounding type. The attachment plug and the integral blades of all other cord-connected and direct plug-in appliances provided with either a line-connected, single-pole on-off switch or overcurrent protective device, or an Edison-base lampholder shall be polarized or of the grounding type.

13.3.1.8 Attachment plugs, appliance couplers, appliance inlets (motor attachment plugs), and appliance (flatiron) plugs, shall comply with the Standard for Attachment Plugs and Receptacles, UL 498. See 16.19 for single and multipole connectors for use in data, signal, control and power applications within and between electrical equipment.

Exception No. 1: Attachment plugs and appliance couplers integral to cord sets or power supply cords that are investigated in accordance with the Standard for Cord Sets and Power Supply Cords, UL 817 are not required to comply with UL 498.

Exception No. 2: A fabricated pin terminal assembly need not comply with UL 498 if it complies with:

a) Mechanical Assembly, Section 10;

b) Accessibility of live parts, Section 8.5;

c) Live Parts, Section 14;

d) Pin terminals, Section 13.3.2; and

e) Spacings, Section 26

of this standard.

13.3.1.9 Female devices (such as appliance couplers, and connectors) that are intended, or that may be used, to interrupt current in the end product, shall be suitably rated for current interruption of the specific type of load, when evaluated with its mating plug or connector. For example, an appliance coupler that can be used to interrupt the current of a motor load shall have a suitable horsepower rating when tested with its mating plug.

13.3.1.10 When a 3-wire grounding-type attachment plug or a 2-wire polarized attachment plug is provided, the attachment plug connections shall comply with Figure 13.2 and the polarity identification of the flexible cord shall comply with Table 13.3.

This document is only permissible for use by Mohamed Waheed of Bechtel Corporation. 7/20/2021 6:27:09 PM

Documents
Document Sharing Hub
UL COPYRIGHTED MATERIAL – NOT AUTHORIZED FOR FURTHER REPRODUCTION OR DISTRIBUTION WITHOUT PERMISSION FROM UL INC.
Full document details: UL 859 2021

Figure 13.2

Connection to attachment plug

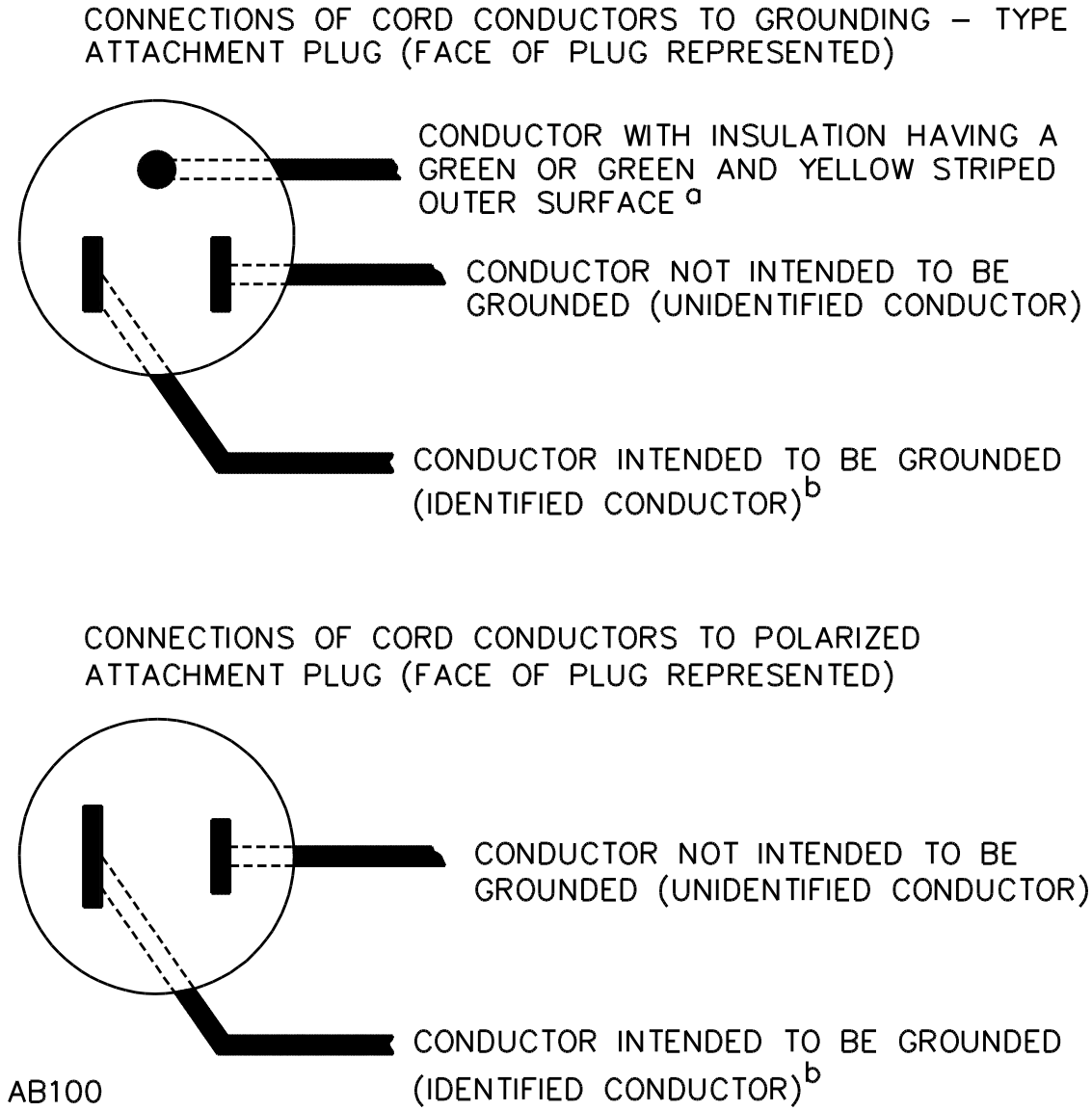

[a] In the above illustration, the blade to which the green conductor is connected may have a U-shaped or a circular cross section.

[b] Signifies a conductor identified in accordance with Table 13.3.

This document is only permissible for use by Mohamed Waheed of Bechtel Corporation. 7/20/2021 6:27:09 PM

Documents
Document Sharing Hub
UL COPYRIGHTED MATERIAL – NOT AUTHORIZED FOR FURTHER REPRODUCTION OR DISTRIBUTION WITHOUT PERMISSION FROM UL INC.
Full document details: UL 859 2021

Table 13.3
Polarity identification of flexible cords

Method of polarity identification	Required combinations	
	Wire intended to be grounded[a]	All other wires[a]
Colored braid	Solid white or gray	Solid color other than white or gray
Tracer in braid	Solid white or gray braid with no tracer in braid[b]	Solid white or gray braid with a colored tracer in braid[b]
	Colored tracer in braid of a color other than white or gray	No tracer in braid of solid color other than white or gray
Colored insulation[c]	Solid white or gray	Solid color other than white or gray
	Light blue[d]	Solid color other than light blue, white, or gray[d]
Colored separator[e]	White or gray	Color other than white or gray
Tinned conductors[f]	Tin or other white metal on all strands of the conductor	No tin or other white metal on the strands of the conductor
Surface marking[e]	One or more stripes, ridges, or grooves, or a combination of these on the exterior surface of the cord	

[a] A conductor having insulation finished to show a green color with or without one or more straight or helical unbroken yellow stripes or having a green braid with or without one or more yellow tracers is to be used only as an equipment grounding conductor. See also 27.4 for the description of an equipment grounding conductor and Figure 13.2 for the connection of conductors to attachment plugs.

[b] Only for Types C and PD cords.

[c] Only for a cord having no braid on any individual conductor.

[d] Only for a cord having a jacket that is not integral with the circuit conductor insulation.

[e] Only for Types SP-1, SP-2, SPE-1, SPE-2, SPT-1, and SPT-2 cords.

[f] Only for Types SPT-1 and SPT-2 cords.

13.3.1.11 Type SPT-2, SVT, or SVTO flexible cord may be used for connecting a pendant-type on-off switch, a temperature control, or both to a table- or floor-supported hair dryer.

13.3.1.12 A power supply cord shall not employ conductors smaller than 18 AWG (0.82 mm^2).

Exception: Hand-supported household appliances weighing less than 1/2 pound (0.23 kg), including facial saunas, curling irons and brushes, manicure and pedicure sets, hair crimping and hair straightening irons, may employ non-detachable power-supply cords with 20 AWG (0.52 mm^2) conductors provided that:

a) The flexible cord is type SPT-1, SP-1, SPE-1 or is a type that is, at minimum, equivalent to these types;

b) The appliance is not intended for continuous use nor for being indefinitely left "on" in stand-by mode (initial warm-up period excluded);

c) The appliance is rated 2 amperes or less and does not continuously draw more than 2 amperes under intended use conditions; and

d) The temperatures on the flexible cord are monitored during the normal temperature test and the temperatures do not exceed the temperature limit of the flexible cord.

This document is only permissible for use by Mohamed Waheed of Bechtel Corporation. 7/20/2021 6:27:09 PM

Documents
Document Sharing Hub

UL COPYRIGHTED MATERIAL – NOT AUTHORIZED FOR FURTHER REPRODUCTION OR DISTRIBUTION WITHOUT PERMISSION FROM UL INC.

Full document details: UL 859 2021

13.3.1.13 A power supply cord with integral fittings shall comply with the requirements in the Standard for Cord Sets and Power-Supply Cords, UL 817, except that it is not required to be provided with integral overcurrent protection.

Exception: A power supply with integral swivel assembly shall comply with the applicable requirements in this standard and the following requirements in the Standard for Cord Sets and Power-Supply Cords, UL 817:

a) Normal Temperature Test, Section 87, with the temperature rise at swivel contact not more than 30°C;

b) Dielectric Voltage Withstand Test, Section 88, with dielectric voltage applied:

i) Between two individual conductors of swivel plug and; ii) between conductors of swivel plug and metal foil tightly wrapped onto surface of molded-on swivel plug (other than fitting face) and

ii) Between conductors of swivel plug and metal foil tightly wrapped onto surface of molded-on swivel plug (other than fitting face);

c) Insulation Resistance Test, Section 89; and

d) Accelerated Aging Tests, Section 90.

13.3.1.14 Hand-supported appliances provided with detachable power supply cords, including hand-supported appliances likely to be disconnected while under load, shall not pose a risk of electric shock, fire or injury when mated or disconnected under any orientation or polarity permitted by the construction. The mating connector shall be held securely in place and shall not be allowed to rotate. Compliance is determined by the test of 65.4 and 65.5.

13.3.1.15 Appliances provided with a detachable base or stand subject to repeated connection and disconnection during normal use shall not pose a risk of electric shock, fire or injury when mated or disconnected under any orientation or polarity permitted by the construction. The mating connector shall be held securely in place and shall not be allowed to rotate. Compliance is determined by the test of 65.6 and 65.7.

13.3.1.16 Appliances provided with a detachable base or stand intended to power a hand-supported appliance which may be disconnected from power during normal use shall not tip over when the hand-supported portion of the appliance is assembled as intended to the base. Compliance is determined by the stability test of 65.8 and 65.9.

13.3.1.17 Locking features provided in accordance with (a) and (b) in the Exception to 13.3.1.2 shall be formed and assembled to have the strength and rigidity required to resist the abuses to which it is able to be subjected. Compliance is determined by the test of 65.10.

13.3.1.18 Female contacts and live parts associated with connectors for appliances intended to be disconnected under load during normal use shall not have exposed contacts or terminals accessible to the probe in Figure 13.3.

Exception: Exposed contacts or terminals are acceptable if located in a secondary circuit and all of the following conditions are met:

a) The maximum output voltage (V_{max}) does not exceed 42.4 volts peak (30 V_{rms}).

b) The output current does not exceed 8 amperes under any connection of loading including and up to short circuit for ac or dc voltages up to 42.2 V peak (30 V_{rms}).

This document is only permissible for use by Mohamed Waheed of Bechtel Corporation. 7/20/2021 6:27:09 PM

Documents
Document Sharing Hub

UL COPYRIGHTED MATERIAL – NOT AUTHORIZED FOR FURTHER REPRODUCTION OR DISTRIBUTION WITHOUT PERMISSION FROM UL INC.

Full document details: UL 859 2021

Figure 13.3

Probe

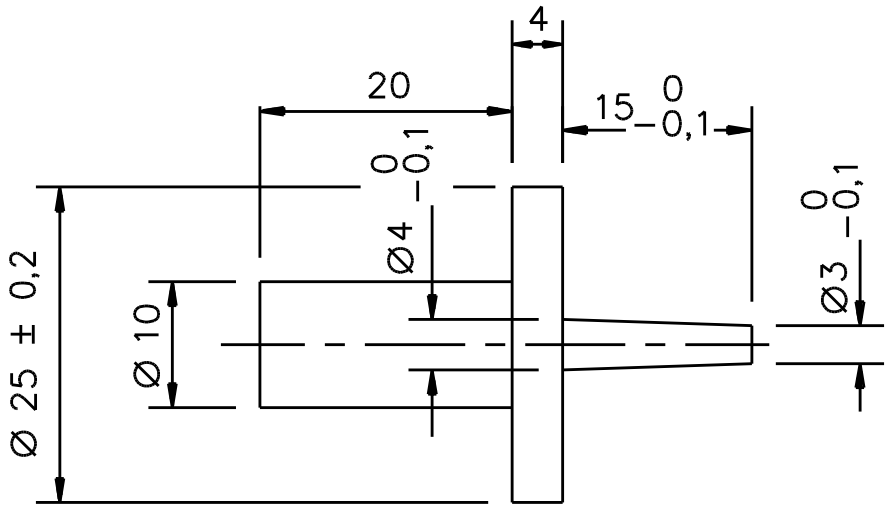

Dimensions in millimetres

S2962D

13.3.1.19 A cord reel shall comply with "special use cord reel" requirements of the Standard for Cord Reels, UL 355. For products provided with cord tag, the cord tag shall not retract into cord reel.

13.3.2 Pin terminals

13.3.2.1 When an appliance is provided with pin terminals, the construction of the appliance shall be such that no live part will be exposed to unintentional contact both during and after the placement of the plug on the pins in the intended manner.

13.3.2.2 When an appliance is provided with pin terminals, a pin guard is required, such that:

a) A straight edge placed in any position, including across and in contact with edges of the plug opening without the plug in place, cannot be made to contact any current-carrying pin.

b) With the plug aligned with the pins and the face of the plug in a plane located perpendicular to the end or ends of the farthest projecting current-carrying pin, the probe illustrated in Figure 8.1 shall not touch any current-carrying pin while the probe is inserted through any opening with the appliance in any position.

13.3.2.3 When the pins on the appliance are of American National Standard configuration, the plug used in 13.3.2.2(b) shall consist of an appliance plug in accordance with the Standard for Wiring Devices – Dimensional Requirements, ANSI/NEMA WD6.

13.3.2.4 When the pins on the appliance are not of an American National Standard configuration, the plug used in 13.3.2.2(b) shall be the plug supplied with the appliance – 125 volts, 10 amperes, and 250 volts, 5 amperes.

This document is only permissible for use by Mohamed Waheed of Bechtel Corporation. 7/20/2021 6:27:09 PM

Documents
Document Sharing Hub

UL COPYRIGHTED MATERIAL – NOT AUTHORIZED FOR FURTHER REPRODUCTION OR DISTRIBUTION WITHOUT PERMISSION FROM UL INC.

Full document details: UL 859 2021

13.3.2.5 When an appliance uses three or more pin terminals intended for use with a plug that covers all the pins, the terminals shall be spaced so that they will not accommodate a flatiron, appliance plug, or cord connector. These pins shall accommodate the plug required for the particular application.

13.3.2.6 A pin terminal shall be securely and rigidly mounted and shall be prevented from shifting in position by means other than friction between surfaces.

13.3.2.7 The requirement specified in 13.3.2.6 is intended primarily to provide for the maintenance of spacings as specified in 26.1.6, and to maintain required spacings between pin terminals. Under this requirement, consideration is also to be given to the means for locking terminals in position to maintain tightness.

13.3.2.8 For a heating appliance, the dimensions of pins and their center-to-center spacings (including the corresponding spacings of the female contacts of general use plugs that these arrangements of pins will accommodate) shall be as indicated in Table 13.4.

Table 13.4
Pins

Type and rating of plug that accommodates the pins	Pin configuration				Pin diameter,		Pin length,	
	Number	Arrangement	Spacing between centers, inch	(mm)	inch	(mm)	inch	(mm)
Appliance plug rated for 5 amperes at 250 volts and for 10 amperes at 125 volts	2	In line	1/2	(12.7)	5/32 ±0.005	(4.0 ±0.13)	9/16 – 5/8	(14.3 – 15.9)
Flat-iron plug rated for 5 amperes at 250 volts and for 10 amperes at 125 volts	2	In line	11/16	(17.5)	3/16 ±0.005	(4.8 ±0.13)	3/4 – 7/8	(19.1 – 22.2)
Jumbo appliance plug rated for 10 amperes at 250 volts and for 15 amperes at 125 volts	2	In line	1-1/16	(27.0)	3/16 ±0.005	(4.8 ±0.13)	3/4 – 7/8	(19.1 – 22.2)
Reversible plug (for two-heat control) rated for 10 amperes at 250 volts and for 15 amperes at 125 volts[a]	3	In line	7/8	(22.2)	3/16 ±0.005	(4.8 ±0.13)	3/4 – 7/8	(19.1 – 22.2)
Reversible plug (for two- or three-heat control) rated for 10 amperes at 250 volts and for 15 amperes at 125 volts[a]	3	One pin at each apex of an equilateral triangle	7/8	(22.2)	3/16 ±0.005	(4.8 ±0.13)	3/4 – 7/8	(19.1 – 22.2)

[a] This plug is usually made without a contact in one of the holes.

13.3.2.9 The material on which the pins are mounted, the proximity of any vapor outlet to the terminals, and the direction of the vapor spray shall be such that water shall be prevented from accumulating at the terminal.

13.4 Strain relief

13.4.1 Strain relief shall be provided such that stress on a flexible cord will not be transmitted to a terminal, splice, or internal wiring in the appliance or in a fitting (attachment plug, appliance plug, or similar component.

This document is only permissible for use by Mohamed Waheed of Bechtel Corporation. 7/20/2021 6:27:09 PM

Documents
Document Sharing Hub

UL COPYRIGHTED MATERIAL – NOT AUTHORIZED FOR FURTHER REPRODUCTION OR DISTRIBUTION WITHOUT PERMISSION FROM UL INC.

Full document details: UL 859 2021

13.4.2 If a knot in a flexible cord serves as strain relief, the surface against which the knot bears or with which it contacts shall be free of any projection, sharp edge, burr, fin, results in abrasion of the insulation on the conductors.

13.4.3 Insulating bushings serving as strain relief shall comply with the Standard for Insulating Bushings, UL 635. Tests specified in this standard (e.g. Strain Relief Test) may still need to be performed to confirm the combination of the insulating bushing and the supporting part are suitable.

Exception: A bushing that is an integral part of power supply cord and a soft rubber bushing specified in the Exception to 13.5.5 need not comply with UL 635. Tests specified in this standard (e.g. Strain Relief Test) need to be performed to confirm the combination of the insulating bushing and the supporting part are suitable.

13.5 Bushings

13.5.1 At a point where a flexible cord passes through an opening in a wall, barrier, or enclosing case, there shall be a bushing or the equivalent that is substantial, reliably secured in place, and that has a smooth, rounded surface against which the cord bears. The bushing or the equivalent is to protect the cord from abrasion damage; it is not intended for strain-relief or flex-relief purposes. An insulating bushing shall be provided if:

a) Type SP-1, SPE-1, SPT-1, SP-2, SPE-2, SPT-2, or other cord lighter than Type HSJ is used;

b) The wall or barrier is of metal; and

c) Construction is such that the cord might be subjected to strain or motion.

The heat- and moisture-resistant properties of the bushing material shall be that required for the particular application.

13.5.2 In addition to the requirements in 13.5.1, Insulating bushings shall comply with the Standard for Insulating Bushings, UL 635.

Exception: Bushings specified in 13.5.5 need not comply with UL 635.

13.5.3 If the cord hole is in wood, porcelain, phenolic composition, or other nonconducting material, a smooth rounded surface is deemed equivalent to a bushing.

13.5.4 Ceramic materials and some molded compositions are acceptable for insulating bushings. A separate bushing of wood or rubber material (other than in a motor) is not. Vulcanized fiber may be used if the bushing is no less than 1/16 inch (1.6 mm) thick [with a minus tolerance of 1/64 inch (0.4 mm) for manufacturing variations] and if it is formed and secured in place so that it will not be affected adversely by conditions of ordinary moisture.

13.5.5 A separate soft rubber, neoprene, or polyvinyl chloride bushing may be used in the frame of a motor or in the enclosure of a capacitor physically attached to a motor (but not elsewhere in an appliance) when:

a) The bushing is not less than 1/16 inch (1.6 mm) thick, with a minus tolerance of 1/64 inch (0.4 mm); and

b) The bushing is located so that it will not be exposed to oil, grease, oily vapor, or other substance having a harmful effect on the bushing material.

This document is only permissible for use by Mohamed Waheed of Bechtel Corporation. 7/20/2021 6:27:09 PM

Documents
Document Sharing Hub

UL COPYRIGHTED MATERIAL – NOT AUTHORIZED FOR FURTHER REPRODUCTION OR DISTRIBUTION WITHOUT PERMISSION FROM UL INC.

Full document details: UL 859 2021

Exception: A bushing of any of the materials specified may be used at any point in an appliance if used in conjunction with a type of cord for which an insulating bushing is not required and if the edges of the hole in which the bushing is mounted are smooth and free from any burr, fin, or similar abrading surface.

13.5.6 An insulated metal grommet may be used in place of an insulating bushing if the insulating material used is not less than 1/32 inch (0.8 mm) thick and completely fills the space between the grommet and the metal in which it is mounted.

13.6 Direct plug-in appliances

13.6.1 With regard to Figure 13.4, the maximum moment, center of gravity, dimensions, and weight of a direct plug-in appliance shall comply with the requirements specified in (a) – (d). See 13.6.2 and 13.6.3 for symbol definitions and methods of application:

a) The quotient of WY/Z shall not exceed 48 ounces (1.36 kg).

b) The quotient of WY/S shall not exceed 48 ounces.

c) The product of WX shall not exceed 80 ounce-inches (0.56 N•m).

d) The weight of an appliance shall not exceed 28 ounces (0.79 kg).

This document is only permissible for use by Mohamed Waheed of Bechtel Corporation. 7/20/2021 6:27:09 PM

Documents
Document Sharing Hub
UL COPYRIGHTED MATERIAL – NOT AUTHORIZED FOR FURTHER REPRODUCTION OR DISTRIBUTION WITHOUT PERMISSION FROM UL INC.
Full document details: UL 859 2021

Figure 13.4

Dimensions of a direct plug-in appliance

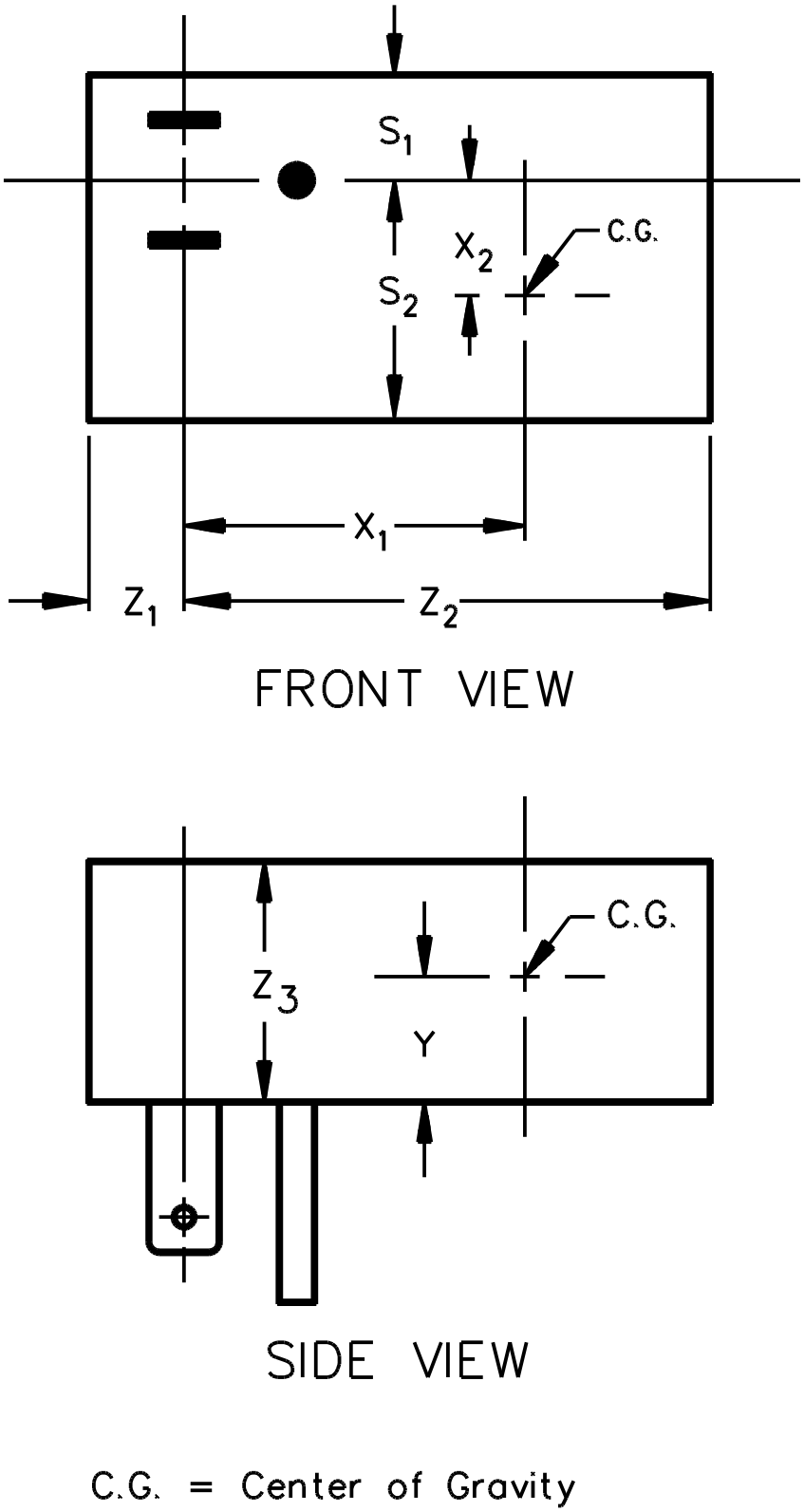

CP100

This document is only permissible for use by Mohamed Waheed of Bechtel Corporation. 7/20/2021 6:27:09 PM

UL COPYRIGHTED MATERIAL – NOT AUTHORIZED FOR FURTHER REPRODUCTION OR DISTRIBUTION WITHOUT PERMISSION FROM UL INC.

Documents
Document Sharing Hub

Full document details: UL 859 2021

13.6.2 Definitions for the symbols used in 13.6.1 are as follows:

a) W is the weight of the appliance.

b) Y is the distance illustrated in Figure 13.4.

c) Z is the shorter distance, Z_1 or Z_2, as illustrated in Figure 13.4.

d) S is the shorter distance, S_1 or S_2, as illustrated in Figure 13.4.

e) X is the longer distance, X_1 or X_2, as illustrated in Figure 13.4.

13.6.3 The moment and weight specified in 13.6.1 are to be determined as follows for:

a) An appliance with an attached cord, the cord is to be cut off at the enclosure or at the strain-relief means if the strain-relief means extends outside the enclosure.

b) An appliance with a directly mounted accessory, the values are to be measured with the accessory in place.

c) An appliance with a mounting tab, the tab is not to be included in the measurement of linear dimensions for the purpose of determining moments.

13.6.4 When inserted in a parallel-blade duplex receptacle, any part of an appliance, including a mounting tab, shall not interfere with full insertion of an attachment plug into the adjacent receptacle as illustrated in Figure 13.5.

Exception: An appliance that renders the adjacent receptacle completely unusable is acceptable.

This document is only permissible for use by Mohamed Waheed of Bechtel Corporation. 7/20/2021 6:27:09 PM

Documents
Document Sharing Hub
UL COPYRIGHTED MATERIAL – NOT AUTHORIZED FOR FURTHER REPRODUCTION OR DISTRIBUTION WITHOUT PERMISSION FROM UL INC.
Full document details: UL 859 2021

Figure 13.5

Parallel receptacle duplex

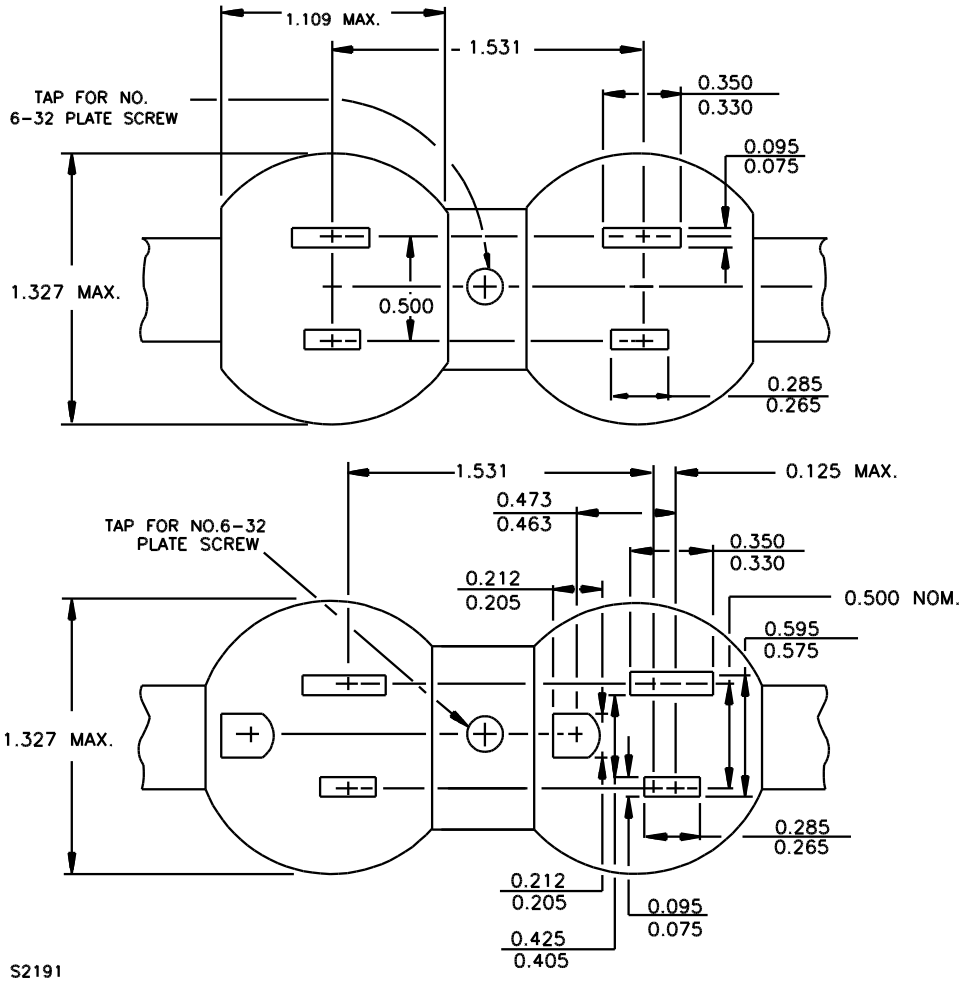

This document is only permissible for use by Mohamed Waheed of Bechtel Corporation. 7/20/2021 6:27:09 PM

Documents
Document Sharing Hub
UL COPYRIGHTED MATERIAL – NOT AUTHORIZED FOR FURTHER REPRODUCTION OR DISTRIBUTION WITHOUT PERMISSION FROM UL INC.
Full document details: UL 859 2021