# UL 867

## STANDARD FOR SAFETY

Electrostatic Air Cleaners

Documents
Document Sharing Hub

Full document details: UL 867 2021

Documents
Document Sharing Hub

Full document details: UL 867 2021

UL Standard for Safety for Electrostatic Air Cleaners, UL 867

Fifth Edition, Dated August 4, 2011

***Summary of Topics***

***This revision to ANSI/UL 867 August 16, 2021 is being issued to incorporate the following requirements:***

> ***– Requirements for Battery Operated Air Cleaners; 1.1.1, 1.1.2, 4A.9.1, 6A.1, 6A.1.1, Section 33A and Section 51D***
>
> ***– UL 508C Withdrawal and Replacement with UL 61800-5-1; 13A.3***

Text that has been changed in any manner or impacted by UL's electronic publishing system is marked with a vertical line in the margin.

The new and revised requirements are substantially in accordance with Proposal(s) on this subject dated July 19, 2021.

All rights reserved. No part of this publication may be reproduced, stored in a retrieval system, or transmitted in any form by any means, electronic, mechanical photocopying, recording, or otherwise without prior permission of UL.

UL provides this Standard "as is" without warranty of any kind, either expressed or implied, including but not limited to, the implied warranties of merchantability or fitness for any purpose.

In no event will UL be liable for any special, incidental, consequential, indirect or similar damages, including loss of profits, lost savings, loss of data, or any other damages arising out of the use of or the inability to use this Standard, even if UL or an authorized UL representative has been advised of the possibility of such damage. In no event shall UL's liability for any damage ever exceed the price paid for this Standard, regardless of the form of the claim.

Users of the electronic versions of UL's Standards for Safety agree to defend, indemnify, and hold UL harmless from and against any loss, expense, liability, damage, claim, or judgment (including reasonable attorney's fees) resulting from any error or deviation introduced while purchaser is storing an electronic Standard on the purchaser's computer system.

Documents
Document Sharing Hub

Full document details: UL 867 2021

No Text on This Page

Documents
Document Sharing Hub

Full document details: UL 867 2021

**AUGUST 4, 2011**
(Title Page Reprinted: August 16, 2021)

**ANSI/UL 867-2021**



# UL 867

## Standard for Electrostatic Air Cleaners

First Edition – December, 1980
Second Edition – October, 1989
Third Edition – March, 1995
Fourth Edition – October, 2000

**Fifth Edition**

**August 4, 2011**

This ANSI/UL Standard for Safety consists of the Fifth Edition including revisions through August 16, 2021.

The most recent designation of ANSI/UL 867 as an American National Standard (ANSI) occurred on August 16, 2021. ANSI approval for a standard does not include the Cover Page, Transmittal Pages, and Title Page.

The Department of Defense (DoD) has adopted UL 867 on June 11, 1992. The publication of revised pages or a new edition of this Standard will not invalidate the DoD adoption.

Comments or proposals for revisions on any part of the Standard may be submitted to UL at any time. Proposals should be submitted via a Proposal Request in UL's On-Line Collaborative Standards Development System (CSDS) at https://csds.ul.com.

UL's Standards for Safety are copyrighted by UL. Neither a printed nor electronic copy of a Standard should be altered in any way. All of UL's Standards and all copyrights, ownerships, and rights regarding those Standards shall remain the sole and exclusive property of UL.

**COPYRIGHT © 2021 UNDERWRITERS LABORATORIES INC.**

Documents
Document Sharing Hub

Full document details: UL 867 2021

No Text on This Page

Documents
Document Sharing Hub

Full document details: UL 867 2021

## CONTENTS

### INTRODUCTION

1 Scope ....7
2 General ....7
2.1 Components ....7
2.2 Units of measurement ....7
2.3 Undated references ....7
3 Glossary ....8

### CONSTRUCTION

4 General ....11
4A Components ....11
4A.1 General ....11
4A.2 Attachment plugs, receptacles, connectors and terminals ....12
4A.3 Boxes and raceways ....13
4A.4 Cords, cables and internal wiring ....13
4A.5 Cord reels ....14
4A.6 Ground-fault, arc-fault and leakage current detectors/interrupters ....14
4A.7 Light sources and associated components ....14
4A.8 Overcurrent protection ....15
4A.9 Power supplies ....15
4A.10 Supplemental insulation, insulating bushings and assembly aids ....15
4A.11 Transformers ....16
4A.12 Button or coin cell batteries ....17
4A.13 Information technology equipment ....18
4A.14 Optical isolators and semiconductor devices ....18
5 Accessories ....18
6 Frame, Cabinet and Enclosure ....19
6.1 General ....19
6.2 High-voltage power supply ....20
6.3 Fixed products ....21
6.4 Portable products ....23
6A Nonmetallic Parts ....24
6B Nonmetallic Materials ....24
6C Nonmetallic Material Ignition Sources Separation ....24
7 Accessibility of Uninsulated Live Parts and Moving Parts ....26
8 Mechanical Assembly ....31
8.1 General ....31
8.2 Assembly for shipping ....32
8.3 Mechanical barriers ....32
9 Live Parts ....33
10 Protection Against Corrosion ....33
10.1 Products intended for indoor use ....33
10.2 Products intended for outdoor use ....33
11 Electrical Insulation ....35
11.1 All circuits ....35
11.2 Primary circuits ....35
11.3 Secondary circuits ....35
11.4 Insulating barriers ....35
12 Supply Connections ....36
12.1 Permanently-connected products ....36
12.2 Cord-connected products ....40

Documents
Document Sharing Hub
Full document details: UL 867 2021

12.3 Cord-connected conversion to permanently connected ..... 42
13 Polarization ..... 42
13A Switches and Controllers ..... 43
13B Remotely Operated Electrostatic Air Cleaners ..... 48
14 Grounding ..... 49
14.1 General ..... 49
14.2 Bonding ..... 49
14.3 Portable products ..... 50
15 Internal Wiring ..... 50
15.1 General ..... 50
15.2 Primary circuits ..... 51
15.3 High-voltage circuits ..... 52
16 Capacitors ..... 52
17 Coil Windings ..... 54
18 Printed-Wiring Boards ..... 54
19 Overcurrent Protection ..... 54
19A General Purpose Transformer – Insulation Systems ..... 55
20 Motors and Motor Overcurrent Protection ..... 55
21 Washing ..... 56
22 Filters ..... 56
23 Spacings ..... 57
23.1 General ..... 57
23.2 Low voltage and isolated-limited-energy circuits ..... 57
23.3 Line-voltage circuits ..... 58
23.4 High-voltage circuits ..... 58
23.5 Insulating barriers ..... 60
23.6 Alternate spacings – clearances and creepage distances ..... 60
24 Separation of Circuits ..... 61
24.1 General ..... 61
24.2 Class 2 circuits ..... 61
24.3 Permanently-connected products ..... 61

**PROTECTION AGAINST INJURY TO PERSONS**

25 General ..... 62
26 Rotating Parts ..... 62
27 Enclosures and Guards ..... 63
28 Impact Test ..... 63
29 Interlocks ..... 64
29.1 Switches ..... 64
29.2 Interlocks ..... 64
30 Electronic Circuits ..... 64
31 Stability ..... 64
32 Collector Handle Securement Test ..... 65
33 External Surface Temperatures ..... 65
33A Battery Operated Air Cleaners ..... 65
33A.1 General ..... 65

**PERFORMANCE**

34 General ..... 69
35 Leakage Current Test ..... 69
35.1 General ..... 69
35.2 Normal use ..... 69
36 Leakage Current Following Humidity Conditioning ..... 71

Documents
Document Sharing Hub
Full document details: UL 867 2021

37 Partially Protected Parts ....71
38 Input Test....72
39 Output Test ....73
40 Ozone Test ....73
40.1 General....73
40.2 Chamber specifications....74
40.3 Equipment specifications ....76
40.4 Test method ....76
41 Peak Ozone Emission Location Determination ....79
42 Strain Relief Test ....79
43 Pushback Relief Test ....79
44 Grounding Resistance Test ....80
45 Temperature Test ....80
46 Dielectric Voltage-Withstand Test ....85
46.1 General....85
46.2 High-voltage transformer core....87
46.3 Induced potential ....87
46A General Purpose Transformers ....87
46A.1 General ....87
46A.2 Voltage measurement test....87
46A.3 Overload test ....87
46A.4 Repeated dielectric voltage-withstand test....88
46B Thermal Aging Test ....88
46C Endurance Test – Switching Devices ....89
47 Stored Energy Test....90
48 Evaluation of Reduced Spacings on Printed-Wiring Boards ....91
48.1 General....91
48.2 Shorted trace test ....91
49 Abnormal Operation Test ....92
49.1 General....92
49.2 High-voltage supply ....93
49.3 High-voltage spacings short circuit....93
49.4 Unenclosed high-voltage power supply ....93
49.5 Component short- and open-circuit test ....93
49.6 Stalled rotor, restricted air inlet and blocked air outlet....94
49.7 Low-voltage powered product overvoltage test....94
49A Protective Electronic Circuit Tests....94
49A.1 General ....94
49A.2 Fault conditions abnormal test ....94
49A.3 Electromagnetic compatibility (EMC) tests....96
49A.4 Programmable component reduced supply voltage test....97
49A.5 Fuse-link test ....98
49B Rain Test ....98
49C Accelerated Aging Tests – Gaskets ....101
49D Switch Mode Power Supply Units – Overload Test....103
50 Metallic Coating Thickness Test....103
51 High-Voltage Insulating Material Arcing Test....105
51A Tests on Nonmetallic Materials ....105
51B Fastener Strength Test ....107
51C Wiring Endurance Test ....107
51D Non-Metallic Enclosure-Fastener Test for Battery Operated Appliances ....108
52 Permanence of Marking....109

**MANUFACTURING AND PRODUCTION TESTS**

53 Dielectric Voltage-Withstand Test ....110

Documents
Document Sharing Hub
Full document details: UL 867 2021

54 Grounding Continuity ..... 112
54A Protective Electronic Circuit Test ..... 112

**RATINGS**

55 Details ..... 112

**MARKINGS**

56 Visible During Installation and Inspection ..... 112
57 Visible After Installation ..... 113
58 Cautionary Markings ..... 114
59 Manufacturer's Literature ..... 115

**APPENDIX A**

**Appendix B – (Normative) – Operating and Protective (“Safety Critical”) Control Functions**

Documents
Document Sharing Hub
Full document details: UL 867 2021

## INTRODUCTION

### 1 Scope

1.1 These requirements cover electrostatic air cleaners rated at 600 volts or less, intended to remove dust and other particles from the air and intended for use in accordance with the National Electrical Code, ANSI/NFPA 70.

1.1.1 In reference to 1.1, these requirements may be used to evaluate products that are:

a) Powered entirely by a low-voltage supply source, such as those intended for connection to a Universal Serial Bus (USB) supply source; or

b) Provided with or intended for use with one or more rechargeable battery system(s) for portable appliances intended for household use only.

1.1.2 These requirements do not cover battery operated products other than portable appliances intended for household use only.

1.2 These requirements do not cover electrostatic air cleaners for use in hazardous locations or to clean atmospheres defined as hazardous by the National Electrical Code, ANSI/NFPA 70.

1.3 These requirements do not cover air cleaners intended to remove particles other than dust and other particles normally found in heating and ventilating systems.

1.4 Requirements for the installation of duct-type electrostatic air cleaners are included in the Standard for the Installation of Air Conditioning and Ventilating Systems, NFPA 90A; and the Standard for the Installation of Warm Air Heating and Air Conditioning Systems, NFPA 90B.

### 2 General

#### 2.1 Components

2.1.1 *Deleted*

2.1.2 *Deleted*

2.1.3 *Deleted*

2.1.4 *Deleted*

2.1.5 No component shall contain liquid mercury.

#### 2.2 Units of measurement

2.2.1 Values stated without parentheses are the requirement. Values in parentheses are explanatory or approximate information.

#### 2.3 Undated references

2.3.1 Any undated reference to a code or standard appearing in the requirements of this standard shall be interpreted as referring to the latest edition of that code or standard.

Documents
Document Sharing Hub

Full document details: UL 867 2021

## 3 Glossary

3.1 For the purposes of this standard the following definitions apply.

3.2 ACCESSIBLE PART – A part located so that it can be contacted by a person either directly or by means of a probe as specified in Accessibility of Uninsulated Live Parts and Moving Parts, Section 7.

3.3 AIR CLEANERS – An air cleaner is defined as one of the following:

a) Duct type – An air cleaner intended for installation in and at adjoining ducts, including the plenum, of heating, air conditioning, and ventilating systems. The air cleaner may not be provided with a fan, and the duct may provide part or all of the cabinet. This type of air cleaner may be either cord-and-plug connected or permanently connected to the electrical supply source.

b) Fixed type – An air cleaner intended to be:

1) Permanently connected to the electrical supply source;

2) Permanently mounted, such that tools are required for the product installation or removal; or,

3) Sized so that it is not easily moved from one place to another.

c) Portable type – A cord-and-plug-connected air cleaner that:

1) Can be easily moved from one place to another for use; and

2) Has no provision for permanent mounting. Tools are not required for the product installation or removal.

d) *Deleted*

e) *Deleted*

3.3.1 BARRIER, INSULATING – A partition for isolating parts of electrical circuits.

3.3.2 BARRIER, MECHANICAL – A partition for isolating ignition sources, moving parts or protection of wiring.

3.4 *Deleted*

3.4.0 CABINET – The part of the equipment that:

a) Provides physical protection to insulated wiring, enclosures, moving parts, motors, enclosed electrical parts, tubing or any other parts that may cause injury to persons; and,

b) Does not, by itself, enclose any high-voltage or line-voltage uninsulated live parts.

3.4.0.1 CAPACITOR, CLASS Y – Capacitor or resistor-capacitor unit of a type suitable for use in situations where failure of the capacitor could lead to danger of electric shock. (Examples would include capacitors connected across the primary and secondary circuits where electrical isolation is required to prevent an electric shock or between hazardous live parts and accessible parts.)

3.4.1 COMPONENT – A device or fabricated part of a product covered by the scope of a safety standard dedicated to that purpose. If incorporated in a product, a part that is otherwise typically field installed (e.g. luminaire) is considered to be a component. Unless otherwise specified, materials that compose a device

AVA Documents
Document Sharing Hub
Full document details: UL 867 2021

or fabricated part, such as aluminum or copper, are not considered components. Generally, components are incomplete in construction features or restricted in performance capabilities. Such components are intended for use only under specific, limited conditions, such as certain temperatures not exceeding specified limits.

3.4.2 CONTROL, OPERATING – A device or assembly of devices, the operation of which starts or regulates the end product during normal operation. For example, a thermostat, the failure of which a thermal cutout/limiter or another layer of protection would mitigate the risk of electric shock, is considered an operating control and in this example could also be called a “regulating control”. Operating controls can also include other controlling devices such as switches, contactors, relays and similar devices. Appendix B specifies control functions that are not considered to result in a risk of fire, electric shock or injury to persons.

3.4.3 CONTROL, PROTECTIVE – A device or assembly of devices, the operation of which is intended to reduce the risk of fire, electric shock or injury to persons during normal and reasonably anticipated abnormal operation of the product. For example, a thermal cutout/limiter, or any other control/circuit relied upon for normal and abnormal conditions, is considered a protective control. Protective controls are also referred to as “limiting controls” or “safety controls” and are investigated under normal and single-fault conditions. Appendix B specifies control functions that are considered to result in a risk of fire, electric shock or injury to persons.

3.4.4 ELECTRONIC COMPONENT – A part in which electrical conduction is achieved principally by electrons moving through a vacuum, gas or semiconductor. A Metal Oxide Varistor (MOV) is considered to be an electronic component, but neon indicators are not.

©IEC. This material is reproduced from IEC 60335-1 Ed. 5.2 b:2016 with permission of the American National Standards Institute (ANSI) on behalf of the International Electrotechnical Commission. All rights reserved.

3.4.5 ELECTRONIC DISCONNECTION – The de-energizing of a load within a product by an electronic device of a circuit. No electro-mechanical component having an air gap, such as a switch, contactor or relay is used to de-energize the load.

3.5 ELECTROSTATIC AIR CLEANER (AIR CLEANER) – A product intended to remove dust and other particles from the air. The complete product consists of an assembly of a power pack, controls, ionizer-collector cell, and other components.

3.5.1 ENCLOSURE – The part of the equipment that does one or more of the following:

a) Isolates ignition sources,

b) Renders inaccessible all or any part(s) of the equipment that may otherwise present a risk of electric shock, including uninsulated high- or line-voltage parts.

c) Retards propagation of flame initiated by electrical disturbances occurring within.

3.6 EXPOSED PART – A part that is subjected to handling in normal use without removing parts such as doors, covers, or other parts if removal requires the use of a tool.

3.6.1 FUNCTIONAL PART – A part other than an enclosure or cabinet used to maintain the intended relative physical position of fixed or moving parts, maintain the integrity of the structure or required for the intended operation of the product. A fan blade is an example of this type of part.

3.6.2 GROUNDING, FUNCTIONAL – Grounding of a point in a product which is necessary for a purpose other than safety.

Documents
Document Sharing Hub

Full document details: UL 867 2021

3.7 HIGH-VOLTAGE CIRCUIT – A circuit involving a potential of more than 600 volts.

3.7.1 IGNITION SOURCE – Any high- or line-voltage electrical component not located within an enclosure. Wiring with VW-1 insulation is not considered an ignition source.

3.8 ISOLATED-LIMITED-ENERGY CIRCUIT – A circuit derived from an isolated-secondary winding of a transformer having a maximum capacity of 100 volt-amperes and an open-circuit-secondary voltage rating not exceeding 600 volts.

3.9 LINE-VOLTAGE CIRCUIT – A circuit involving a potential of not more than 600 volts, and having characteristics in excess of those of a low-voltage or an isolated-limited-energy circuit.

3.10 LOW-VOLTAGE CIRCUIT – A circuit involving a potential of not more than 30 volts rms and supplied by a primary battery, a Class 2 transformer, or by a combination of a transformer and fixed impedance that, as a unit, complies with all the performance requirements for a Class 2 transformer. A circuit derived from a line-voltage circuit by the connection of resistance in series with the supply circuit to limit the voltage and current is not considered to be a low-voltage or an isolated-secondary circuit.

3.11 *Deleted*

3.11.1 MOTOR CONTROLLER – Any device normally used to start and stop a motor, such as a switch, thermostat, pressure limiting control, or the like.

3.11.2 NONFUNCTIONAL PART – A part of the equipment that does not perform a specific function. Decorative trim is an example of this type of part.

3.12 PARTIALLY PROTECTED PART – A part that is exposed only during user servicing, with voltage and current limitations as specified in Partially Protected Parts, Section 37.

3.13 POWER SUPPLY – A unit consisting of a high-voltage transformer and other electrical component. The unit may also contain controls for the air cleaner.

3.13.1 PROTECTIVE ELECTRONIC CIRCUIT (PEC) – An electronic circuit that prevents a risk of fire, electric shock or injury to persons under abnormal operating conditions.

©IEC. This material is adapted from IEC 60335-1 Ed. 5.2 b:2016 with permission of the American National Standards Institute (ANSI) on behalf of the International Electrotechnical Commission. All rights reserved.

3.14 *Deleted*

3.14.1 SWITCH MODE POWER SUPPLY UNIT – Electronic device incorporating transformer(s) and electronic circuitry(ies), that converts electrical power into single or multiple power outputs by rapidly switching a solid-state device on and off. It may also isolate the input circuit from the output circuit and regulate and/or convert the output voltage and current. The device may consist of one or more individual units with identical or different waveforms and frequencies including dc output.

3.14.2 THERMISTOR – A thermally sensitive semiconductor resistor, which shows over at least part of its resistance/temperature characteristic a significant non-linear change in its electrical resistance with a change in temperature. A thermistor may be either of the positive temperature coefficient (PTC) type or of the negative temperature coefficient (NTC) type.

3.15 USER SERVICING – The replacing, cleaning, or adjusting of filters or adjustment of controls and the like intended to be done by the user.

Documents
Document Sharing Hub

Full document details: UL 867 2021

3.16 VOLTAGE FOLDBACK – A circuit design feature intended to protect the power supply output transistors. When overcurrent is drawn by the load, the supply reduces the output voltage and current to within the safe power dissipation limit of the output transistors.

## CONSTRUCTION

### 4 General

4.1 The construction of a product shall be such that all of the following conditions are met:

a) Normal use and user servicing do not result in a risk of electric shock, fire, or injury to persons.

b) The materials and component are used within their electrical, mechanical, and temperature limits.

c) The assembly protects the components and wiring from being displaced or damaged.

### 4A Components

#### 4A.1 General

4A.1.1 A component of a product covered by this standard shall:

a) Comply with the requirements for that component as indicated in 4A.2 – 4A.10 or the individual component section;

b) Be used in accordance with its rating(s) established for the intended conditions of use;

c) Be used within its established use limitations or conditions of acceptability; and

d) Additionally comply with the applicable requirements of this end product standard.

Note – Specific components are incomplete in construction features or restricted in performance capabilities. Such components are intended for use only under limited conditions, such as certain temperatures not exceeding specified limits, and shall be used only under those specific conditions.

*Exception No. 1: A component of a product covered by this standard is not required to comply with a specific component requirement that:*

*a) Involves a feature or characteristic not required in the application of the component in the product; or*

*b) Is superseded by a requirement in this standard; or*

*c) Is separately investigated when forming part of another component, provided the component is used within its established ratings and limitations.*

*Exception No. 2: A component complying with a component standard other than those cited in 4A.2 – 4A.10 or the individual component section is acceptable if:*

*a) The component also complies with the applicable component standard of 4A.2 – 4A.10 or the individual component section; or*

*b) The component standard:*

*1) Is compatible with the ampacity and overcurrent protection requirements of the National Electrical Code, ANSI/NFPA 70, where appropriate;*

AVA Documents
Document Sharing Hub
Full document details: UL 867 2021

*2) Considers long-term thermal properties of polymeric insulating materials in accordance with the Standard for Polymeric Materials – Long Term Property Evaluations, UL 746B; and*

*3) Any use limitations of the other component standard is identified and appropriately accommodated in the end use application. For example, a component used in a household application, but intended for industrial use and complying with the relevant component standard may assume user expertise not common in household applications.*

4A.1.2 A component that is also intended to perform other functions, such as over current protection, ground-fault circuit-interruption, surge suppression, any other similar functions, or any combination thereof, shall comply additionally with the requirements of the applicable UL standard(s) that cover devices that provide those functions.

*Exception: Where these other functions are not required for the application and not identified as part of markings, instructions, or packaging for the appliance, the additional component standard(s) need not be applied.*

4A.1.3 A component not anticipated by the requirements of this standard, not specifically covered by the component standards of 4A.2 – 4A.10 or individual component sections and that involves a potential risk of electric shock, fire, or personal injury, shall be additionally investigated in accordance with the applicable UL standard, and shall comply with 4A.1.1(b) – (d).

4A.1.4 With regard to a component being additionally investigated, reference to construction and performance requirements in another UL end product standard is appropriate where that standard anticipates normal and abnormal use conditions consistent with the application of this standard.

**4A.2 Attachment plugs, receptacles, connectors and terminals**

4A.2.1 Attachment plugs, receptacles, appliance couplers, appliance inlets (motor attachment plugs), and appliance (flatiron) plugs, shall comply with the Standard for Attachment Plugs and Receptacles, UL 498. See 4A.2.9.

*Exception: Attachment plugs and appliance couplers integral to cord sets or power supply cords are covered under the requirements of the Standard for Cord Sets and Power-Supply Cords, UL 817, and need not comply with UL 498.*

4A.2.2 Quick-connect terminals, both connectors and tabs, for use with one or two 22 – 10 AWG copper conductors, having nominal widths of 3.5, 3.2, 4.8, 5.2, and 6.3 mm (0.110, 0.125, 0.187, 0.205, and 0.250 in), intended for internal wiring connections in appliances, or for the field termination of conductors to the appliance, shall comply with the Standard for Electrical Quick-Connect Terminals, UL 310.

*Exception: Other sizes of quick-connect terminals shall be investigated with respect to crimp pull out, insertion-withdrawal, temperature rise, and all tests shall be conducted in accordance with UL 310.*

4A.2.3 Single and multipole connectors for use in data, signal, control and power applications within and between electrical equipment, and that are intended for factory connection and for factory assembly to copper or copper alloy conductors, or for factory assembly to printed wiring boards, shall comply with the Standard for Component Connectors for Data, Signal, Control and Power Applications, UL 1977. See 4A.2.9.

4A.2.4 Wire connectors shall comply with the Standard for Wiring Connectors, UL 486A-486B.

4A.2.5 Splicing wire connectors shall comply with the Standard for Splicing Wire Connectors, UL 486C.

AVA Documents
Document Sharing Hub

Full document details: UL 867 2021

4A.2.6 Multi-pole splicing wire connectors that are intended to facilitate the connection of hard-wired utilization equipment to the branch-circuit conductors of buildings or that are intended for consumer connection within and between parts of electrical equipment, shall comply with the Standard for Multi-Pole Splicing Wire Connectors, UL 2459. See 4A.2.9.

4A.2.7 Equipment wiring terminals for use with all alloys of copper, aluminum, or copper-clad aluminum conductors, shall comply with the Standard for Equipment Wiring Terminals for Use with Aluminum and/or Copper Conductors, UL 486E.

4A.2.8 Terminal blocks shall comply with the Standard for Terminal Blocks, UL 1059, and, if applicable, be suitably rated for field wiring.

4A.2.9 Female devices (such as receptacles, appliance couplers, and connectors) that are intended, or that may be used, to interrupt current in the end product, shall be suitably rated for current interruption of the specific type of load, when evaluated with its mating plug or connector. For example, an appliance coupler that can be used to interrupt the current of a motor load shall have a suitable horsepower rating when tested with its mating plug.

### 4A.3 Boxes and raceways

4A.3.1 Electrical boxes and the associated bushings and fittings, and raceways, of the types specified in Chapter 3 of the National Electrical Code, ANSI/NFPA 70 and that comply with the relevant UL standard (such as the Standard for Metallic Outlet Boxes, UL 514A, Standard for Nonmetallic Outlet Boxes, Flush-Device Boxes, and Covers, UL 514C, Standard for Cover Plates for Flush-Mounted Wiring Devices, UL 514D) and 4A.1 are considered to fulfill the requirements of this Standard.

### 4A.4 Cords, cables and internal wiring

4A.4.1 A cord set or power supply cord shall comply with the Standard for Cord Sets and Power Supply Cords, UL 817.

4A.4.2 Flexible cords and cables shall comply with the Standard for Flexible Cords and Cables, UL 62. Flexible cord and cables are considered to fulfill this requirement when preassembled in a cord set or power supply cord complying with the Standard for Cord Sets and Power Supply Cords, UL 817.

4A.4.3 Internal wiring composed of insulated conductors shall comply with the Standard for Appliance Wiring Material, UL 758.

*Exception No. 1: Insulated conductors need not comply with UL 758 if they comply with one of the following:*

*a) Standard for Thermoset-Insulated Wires and Cables, UL 44;*

*b) Standard for Thermoplastic-Insulated Wires and Cables, UL 83;*

*c) Standard for Fixture Wire, UL 66; or*

*d) The appropriate UL standard(s) for other insulated conductor types specified in Chapter 3 (Wiring Methods and Materials) of the National Electrical Code, ANSI/NFPA 70.*

*Exception No. 2: Insulated conductors for specialty applications (e.g. data processing or communications) and located in a low-voltage circuit not involving the risk of fire or personal injury need not comply with UL 758.*

AVA Documents
Document Sharing Hub

Full document details: UL 867 2021

### 4A.5 Cord reels

4A.5.1 A cord reel shall comply with the special-use cord reel requirements of the Standard for Cord Reels, UL 355.

### 4A.6 Ground-fault, arc-fault and leakage current detectors/interrupters

4A.6.1 Ground-fault circuit-interrupters (GFCI) for protection against electrical shock shall comply with the Standard for Ground-Fault Circuit-Interrupters, UL 943. The following statement, or equivalent, shall be included as a marking near the GFCI, or as an instruction in the manual: " Press the TEST button (then RESET button) every month to assure proper operation."

4A.6.2 Appliance-leakage-current interrupters (ALCI) for protection against electrical shock shall comply with the Standard for Appliance-Leakage-Current Interrupters, UL 943B.

Note – An ALCI is not considered an acceptable substitute for a GFCI when NFPA 70 requires a GFCI.

4A.6.3 Equipment ground-fault protective devices shall comply with the Standard for Ground-Fault Sensing and Relaying Equipment, UL 1053, and the applicable requirements of the Standard for Ground-Fault Circuit-Interrupters, UL 943.

4A.6.4 Arc-fault circuit-interrupters (AFCI) shall comply with the Standard for Arc-Fault Circuit-Interrupters, UL 1699.

4A.6.5 Leakage-current detector-interrupters (LCDI) and any shielded cord between the LCDI and appliance shall comply with the Standard for Arc-Fault Circuit-Interrupters, UL 1699.

### 4A.7 Light sources and associated components

4A.7.1 Lampholders and indicating lamps shall comply with the Standard for Lampholders, UL 496.

*Exception: Lampholders forming part of a luminaire that complies with an appropriate UL luminaire standard are considered to fulfill this requirement.*

4A.7.2 Lighting ballasts shall comply with the:

a) Standard for Fluorescent-Lamp Ballasts, UL 935; or

b) Standard for High-Intensity Discharge Lamp Ballasts, UL 1029.

*Exception No. 1: Ballasts forming part of a luminaire that complies with an appropriate UL luminaire standard are considered to fulfill this requirement.*

*Exception No. 2: Ballasts for other light sources shall comply with the appropriate UL standard(s).*

4A.7.3 Light emitting diode (LED) light sources shall comply with the Standard for Light Emitting Diode (LED) Light Sources For Use In Lighting Products, UL 8750.

*Exception No. 1: LED light sources forming part of a luminaire that complies with an appropriate UL luminaire standard are considered to fulfill this requirement.*

*Exception No. 2: Individual LED light sources mounted on printed wiring boards and intended for indicating purposes need not comply with UL 8750, but shall comply with the applicable requirements of this end product standard.*

AVA Documents
Document Sharing Hub

Full document details: UL 867 2021

### 4A.8 Overcurrent protection

4A.8.1 *Deleted*

4A.8.2 *Deleted*

4A.8.3 *Deleted*

4A.8.4 *Deleted*

4A.8.5 *Deleted*

### 4A.9 Power supplies

4A.9.1 A power supply other than a high-voltage power supply shall comply with one of the following:

a) For a power supply providing a low-voltage circuit output:

1) Standard for Class 2 Power Units, UL 1310; or

2) Standard for Information Technology Equipment – Safety – Part 1: General Requirements, UL 60950-1, or Standard for Household and Similar Electrical Appliances – Safety – Part 2-29: Particular Requirements For Battery Chargers, UL 60335-2-29; with an output marked "Class 2", or that complies with the limited power source (LPS) requirements and is marked "LPS".

b) For a power supply providing a line-voltage circuit output:

1) Standard for Power Units Other Than Class 2, UL 1012; or

2) Standard for Information Technology Equipment – Safety – Part 1: General Requirements, UL 60950-1.

c) For a switch mode power supply unit not complying with (a) or (b), the relevant requirements in this Standard, including the Switch Mode Power Supply Units – Overload Test, Section 49D, shall be applied.

### 4A.10 Supplemental insulation, insulating bushings and assembly aids

4A.10.1 The requirements for supplemental insulation (e.g. tape, sleeving or tubing) are not specified unless the insulation or device is required to fulfill a requirement of this standard. In such cases:

a) Insulating tape shall comply with the Standard for Polyvinyl Chloride, Polyethylene, and Rubber Insulating Tape, UL 510;

b) Sleeving shall comply with the Standard for Coated Electrical Sleeving, UL 1441;

c) Tubing shall comply with the Standard for Extruded Insulating Tubing, UL 224.

4A.10.2 Insulating bushings that comply with Section 4A.1 of this end-product standard, and the Standard for Insulating Bushings, UL 635, are considered to fulfill the requirements of this Standard. Tests specified in this Standard (e.g. Strain Relief Test) may still need to be performed to confirm the combination of the insulating bushing and the supporting part are suitable.

Documents
Document Sharing Hub
Full document details: UL 867 2021

## 4A.11 Transformers

4A.11.1 General-purpose transformers shall:

a) Comply with the Standard for Low Voltage Transformers – Part 1: General Requirements, UL 5085-1; and the Standard for Low Voltage Transformers – Part 2: General Purpose Transformers, UL 5085-2; or

b) Be completely enclosed within the cabinet and comply with the insulation requirements in 4A.11.3 – 4A.11.7 as well as the construction and performance requirements of this standard as far as they reasonably apply; or,

c) Comply with the Standard for Transformers and Motor Transformers for Use in Audio-, Radio-, and Television-Type Appliances, UL 1411, if used in a circuit involving an audio or video component.

4A.11.2 Class 2 and Class 3 transformers shall:

a) Comply with the Standard for Low Voltage Transformers – Part 1: General Requirements, UL 5085-1; and the Standard for Low Voltage Transformers – Part 3: Class 2 and Class 3 Transformers, UL 5085-3; or,

b) Be entirely located within a low-voltage circuit that is not provided with a protective control.

4A.11.3 If a general purpose transformer has a Class 105 (A) insulation system, the transformer shall comply with:

a) The spacings requirements in Table 23.1; or

b) Except as specified in 4A.11.4, be provided with an insulation system consisting of a combination of magnet wire and be one or more of the following major component insulation materials:

1) Thermoset materials;

2) Those specified in Table 4A.1 at the specified minimum thickness;

3) Materials or a combination of materials, whether polymeric or not polymeric (treated cloth, for example), that are thinner or other than those specified in Table 4A.1, and used to isolate the windings from dead metal parts and:

i) Have a relative or generic thermal index for electrical properties of at least 221°F (105°C); and

ii) Be unfilled glass-reinforced nylon, polycarbonate, polybutylene terephthalate, polyethylene terephthalate, phenolic or acetal.

4) Other polymeric materials complying with the Thermal Aging Test, Section 46B.

Documents
Document Sharing Hub

Full document details: UL 867 2021

**Table 4A.1**
**Primary class A insulating materials and minimum thicknesses**

| Material | Minimum thickness mm | (inches) |
|---|---|---|
| Vulcanized fiber | 0.71 | (0.028) |
| Polyethylene terephthalate film | 0.18 | (0.007) |
| Cambric | 0.71 | (0.028) |
| Treated cloth | 0.71 | (0.028) |
| Electrical grade paper | 0.71 | (0.028) |
| Mica | 0.15 | (0.006) |
| Aramid paper | 0.25 | (0.010) |

4A.11.4 Insulating materials not complying with 4A.11.3(b) shall comply with 4A.11.5 and be used between a crossover lead and the:

a) Turns of the transformer winding to which the lead is connected;

b) Adjacent winding;

c) Metallic enclosure; or

d) Transformer core.

4A.11.5 The insulating materials referenced in 4A.11.4 shall:

a) Be electrical grade paper, waxed or otherwise treated to resist the absorption of moisture, having a total thickness not less than 0.013 inch (0.33 mm); or

b) Be mechanically and thermally equivalent insulating material(s) to (a) and:

1) Have a dielectric breakdown strength of 2500 volts or more in the thickness used; or

2) Withstand the dielectric voltage-withstand test potential in 46.1.1(a) with the potential applied between the coil leads and with the coil lead cut at the point where it enters the inner layer; or

3) Withstand the induced-potential test in 46.3.

4A.11.6 Leads provided as part of a Class 105 (A) insulation system on a general purpose transformer shall be rated 194°F (90°C) minimum.

4A.11.7 The following shall comply with the Standard for Systems of Insulating Materials – General, UL 1446:

a) Materials used in an insulation system operating above Class 105 (A) temperatures; or

b) Insulation systems employing integral ground insulation.

### 4A.12 Button or coin cell batteries

4A.12.1 An appliance, or any accessory of the appliance such as a wireless control, intended for use with one or more single cell batteries, shall comply with 4A.12.2 if the batteries are sized with a maximum:

AVA Documents
Document Sharing Hub
Full document details: UL 867 2021

a) Diameter of 1.25 inch (32 mm); and

b) Height that is less than its diameter.

4A.12.2 An appliance for household use and provided with one or more batteries as specified in 4A.12.1 shall comply with the Standard for Products Incorporating Button or Coin Cell Batteries of Lithium Technologies, UL 4200A or be intended for one of the following:

a) Countertop use only;

b) Fixed installation and with the batteries located at a height not less than 4 feet (1.2 m) above the floor; or

c) Use where the batteries are not intended to be replaced and are not referenced in the appliance markings or in any instructions provided with the appliance.

### 4A.13 Information technology equipment

4A.13.1 Information technology equipment such as a printer, visual display unit, router, communication connectors/data ports or computer shall comply with the Standard for Information Technology Equipment – Safety – Part 1: General Requirements, UL 60950-1.

### 4A.14 Optical isolators and semiconductor devices

4A.14.1 An optical isolator shall comply with the Standard for Optical Isolators, UL 1577 if it is relied upon to provide isolation between:

a) Primary and secondary circuits;

b) Low-voltage safety circuits; or

c) Other high-voltage circuits.

4A.14.2 In addition to complying with 4A.14.1, an optical isolator relied upon to provide feedback between primary and secondary circuits of a switch mode power supply unit shall have a minimum isolation voltage of 1500V.

4A.14.3 A power switching semiconductor device that is relied upon to provide isolation to ground shall comply with the Standard for Electrically Isolated Semiconductor Devices, UL 1557. If the switching semiconductor is used as part of a switch mode power supply unit, it shall have a minimum isolation voltage of 1500 V.

## 5 Accessories

5.1 An appliance having provision for the use of an electrical accessory intended to be attached in the field shall comply with the requirements in this standard, with or without the accessory installed.

5.2 Installation of an accessory by the user shall be by means of a locking type receptacle and plug-in connector.

5.3 When an accessory is to be installed by the user, the appliance shall comply with the requirements in Section 7, Accessibility of Uninsulated Live Parts and Moving Parts, during and after the installation of the accessory.

Documents
Document Sharing Hub

Full document details: UL 867 2021

5.4 The installation of an accessory by service personnel shall be by means of receptacles, plug-in connectors, insulated wire connectors, or by connection to existing wiring terminals.

5.5 With reference to 5.4, an installation shall not require the cutting of wiring or the soldering of connections by the installer. Installations shall not require cutting, drilling, or welding in electrical enclosures and in other areas where such operations may damage electrical components and wiring within the cabinet or enclosure.

5.6 A means for strain relief shall be provided and comply with the strain relief test in Section 42, Strain Relief Test, at a force of 20 pounds (89 N), for the wiring in the accessory if there is a possibility of transmitting stress to the terminal connections during installation.

5.7 All terminals and wiring intended to be field connected shall be identified on the accessory, on the appliance if connections are made between the accessory and the appliance, and on the wiring diagram.

5.8 The intended installation of the accessory shall be indicated in the installation instructions included on or with the accessory. See 59.8.

5.9 As part of the investigation, an accessory is to be trial installed to determine that the installation is feasible, the instructions are detailed and correct, and the use of the accessory does not introduce a risk of electric shock, fire, or injury to persons.

5.10 An electrical accessory intended for field installation shall be marked in accordance with 57.9.

## 6 Frame, Cabinet and Enclosure

### 6.1 General

6.1.1 Electrical parts shall be provided within a cabinet or enclosure.

6.1.2 Other than as noted in 6.1.3, an air-inlet or an air-outlet opening of a duct-type product may be considered enclosed by the adjacent duct work if an insulated or an uninsulated live part accessible without the duct work installed is at an energy level equal to or below that of a partially-protected part as specified in Partially Protected Parts, Section 37.

6.1.3 An air-inlet or an air-outlet opening not always intended to be attached to duct work is not considered to be enclosed.

6.1.4 The cabinet, enclosure and parts of the cabinet or enclosure such as doors, covers, and the like, shall be provided with means for securing them in place.

6.1.5 An enclosure or cabinet shall be formed and assembled so that it will have the strength and rigidity necessary to resist the abuses to which it is likely to be subjected, without increasing its risk of fire, electric shock, or injury to persons due to total or partial collapse with resulting reduction of spacings, loosening or displacement of parts, or other serious defects.

6.1.6 A cast-metal or die-cast metal cabinet or enclosure shall be investigated to determine that it is equivalent to sheet metal.

6.1.7 *Deleted*

6.1.8 *Deleted*

Documents
Document Sharing Hub

Full document details: UL 867 2021

6.1.9 Glass covering an observation opening shall be secured in place so that it cannot be readily displaced in service, and shall provide mechanical protection for the enclosed parts.

6.1.10 Glass for an opening not more than 4 inches (102 mm) in any dimension shall not be less than 0.055 inch (1.40 mm) thick. Glass for a larger opening, but not more than 144 square inches (929 $cm^2$) in area and having no dimensions greater than 12 inches (305 mm), shall not be less than 0.115 inch (2.92 mm) thick.

6.1.11 Glass used to cover an opening larger than 144 square inches (929 $cm^2$) shall be investigated to determine that it has the necessary mechanical strength and is otherwise suitable for the purpose.

6.1.12 Each gasket required to seal an enclosure against the entrance of rain and condensate shall be held in place by mechanical fasteners or adhesives except as indicated in 6.1.13, and shall:

a) Be neoprene, rubber, thermoplastic, polyvinyl chloride or other materials with equivalent properties that comply with Section 49C; or

b) Comply with the Standard for Gaskets and Seals, UL 157 if the gasket physical properties are equivalent to those specified in 49C.2 – 49C.10.

6.1.13 In reference to 6.1.12, gaskets which are not held in place by mechanical fasteners or adhesives but are intended to be retained in the correct position by some other means shall be prevented from displacement either:

a) Due to their location within the equipment, or

b) By the placement of other components in the enclosure so that if the equipment cover is removed, the gasket will be reengaged in the intended manner when the cover is replaced.

6.1.14 Adhesives required to secure gaskets shall comply with 49C.11.

6.1.15 Products intended for outdoor use shall comply with the Rain Test, Section 49B.

6.1.16 For products intended for installation within a concealed space of a building structure, an opening complying with Section 7, Accessibility of Uninsulated Live Parts and Moving Parts, but located on a part of the product concealed by the building structure shall not have any dimension exceeding 17/64 in. (6.75 mm) or a cross-sectional area exceeding 0.055 $in^2$ (35.5 $mm^2$) and there shall be no more than:

a) Four openings in the rear of the enclosure; and

b) Two openings in each of the other four sides of the enclosure.

## 6.2 High-voltage power supply

6.2.1 A high-voltage power supply shall:

a) Be housed within its own enclosure or comply with 49.4.1 – 49.4.3 if the power supply has uninsulated live parts; or

b) Be housed within the cabinet if the live parts of the power supply are insulated.

6.2.2 A power-supply enclosure shall be:

a) Uncoated sheet steel not less than 0.026 inch (0.66 mm) thick;

b) Zinc-coated sheet steel not less than 0.029 inch (0.74 mm) thick;

Documents
Document Sharing Hub
Full document details: UL 867 2021

c) Copper, brass, or aluminum not less than 0.036 inch (0.91 mm) thick; or

d) A polymeric material complying with the applicable requirements in the Standard for Polymeric Materials – Use in Electrical Equipment Evaluations, UL 746C.

## 6.3 Fixed products

6.3.1 Other than as noted in 6.3.2, the thickness of a sheet-metal enclosure of a control panel, a duct door, or a similar component shall be as specified in Table 6.1 and Table 6.2.

*Exception: Table 6.3 may be used for products that are only intended for ceiling mounting.*

**Table 6.1**
**Minimum thickness of carbon steel or stainless steel enclosures**

| Without supporting frame[a] | | | | With supporting frame or equivalent reinforcing[a] | | | | Minimum thickness for uncoated, | | Minimum thickness for coated, | |
|---|---|---|---|---|---|---|---|---|---|---|---|
| Maximum width,[b] | | Maximum length,[c] | | Maximum width,[b] | | Maximum length, | | | | | |
| inches | (cm) | inches | (cm) | inches | (cm) | inches | (cm) | inch | (mm) | inch | (mm) |
| 4.0 | 10.2 | Not limited | | 6.25 | 15.9 | Not limited | | 0.020[d] | 0.51 | 0.023[d] | 0.58 |
| 4.75 | 12.1 | 5.75 | 14.6 | 6.75 | 17.1 | 8.25 | 21.0 | | | | |
| 6.0 | 15.2 | Not limited | | 9.5 | 24.1 | Not limited | | 0.026[d] | 0.66 | 0.029[d] | 0.74 |
| 7.0 | 17.8 | 8.75 | 22.2 | 10.0 | 25.4 | 12.5 | 31.8 | | | | |
| 8.0 | 20.3 | Not limited | | 12.0 | 30.5 | Not limited | | 0.032 | 0.81 | 0.034 | 0.86 |
| 9.0 | 22.9 | 11.5 | 29.2 | 13.0 | 33.0 | 16.0 | 40.6 | | | | |
| 12.5 | 31.8 | Not limited | | 19.5 | 49.5 | Not limited | | 0.042 | 1.07 | 0.045 | 1.14 |
| 14.0 | 35.6 | 18.0 | 45.7 | 21.0 | 53.3 | 25.0 | 63.5 | | | | |
| 18.0 | 45.7 | Not limited | | 27.0 | 68.6 | Not limited | | 0.053 | 1.35 | 0.056 | 1.42 |
| 20.0 | 50.8 | 25.0 | 63.5 | 29.0 | 73.7 | 36.0 | 91.4 | | | | |
| 22.0 | 55.9 | Not limited | | 33.0 | 83.8 | Not limited | | 0.060 | 1.52 | 0.063 | 1.60 |
| 25.0 | 63.5 | 31.0 | 78.7 | 35.0 | 88.9 | 43.0 | 109.2 | | | | |
| 25.0 | 63.5 | Not limited | | 39.0 | 99.1 | Not limited | | 0.067 | 1.70 | 0.070 | 1.78 |
| 29.0 | 73.7 | 36.0 | 91.4 | 41.0 | 104.1 | 51.0 | 129.5 | | | | |
| 33.0 | 83.8 | Not limited | | 51.0 | 129.5 | Not limited | | 0.080 | 2.03 | 0.084 | 2.13 |
| 38.0 | 96.5 | 47.0 | 119.4 | 54.0 | 137.2 | 66.0 | 167.6 | | | | |
| 42.0 | 106.7 | Not limited | | 64.0 | 162.6 | Not limited | | 0.093 | 2.36 | 0.097 | 2.46 |
| 47.0 | 119.4 | 59.0 | 149.9 | 68.0 | 172.7 | 84.0 | 213.4 | | | | |
| 52.0 | 132.1 | Not limited | | 80.0 | 203.2 | Not limited | | 0.108 | 2.74 | 0.111 | 2.82 |
| 60.0 | 152.4 | 74.0 | 188.0 | 84.0 | 213.4 | 103.0 | 261.6 | | | | |
| 63.0 | 160.0 | Not limited | | 97.0 | 246.4 | Not limited | | 0.123 | 3.12 | 0.126 | 3.20 |
| 73.0 | 185.4 | 90.0 | 228.6 | 103.0 | 261.6 | 127.0 | 322.6 | | | | |

[a] See 6.3.4 and 6.3.5.

[b] The width is the smaller dimension of a rectangular sheet metal piece which is part of an enclosure. Adjacent surfaces of an enclosure may have supports in common and be made of a single sheet.

[c] For panels which are not supported along one side, for example, side panels of boxes, the length of the unsupported side shall be limited to the dimensions specified unless the side in question is provided with a flange at least 1/2 inch (12.7 mm) wide.

[d] Sheet metal for an enclosure intended for outdoor use – rainproof – shall not be less than 0.034 inch (0.86 mm) thick if zinc-coated and not less than 0.032 inch (0.81 mm) thick if uncoated.

Documents
Document Sharing Hub
Full document details: UL 867 2021

## Table 6.2
## Thickness of sheet metal for enclosures of aluminum, copper, or brass

| Without supporting frame[a] | | | | With supporting frame or equivalent reinforcing[a] | | | | Minimum thickness, | |
|---|---|---|---|---|---|---|---|---|---|
| Maximum width,[b] | | Maximum length,[c] | | Maximum width,[b] | | Maximum length, | | | |
| inches | (cm) | inches | (cm) | inches | (cm) | inches | (cm) | inch | (mm) |
| 3.0 | 7.6 | Not limited | | 7.0 | 17.8 | Not limited | | | |
| 3.5 | 8.9 | 4.0 | 10.2 | 8.5 | 21.6 | 9.5 | 24.1 | 0.023[d] | 0.58 |
| 4.0 | 10.2 | Not limited | | 10.0 | 25.4 | Not limited | | | |
| 5.0 | 12.7 | 6.0 | 15.2 | 10.5 | 26.7 | 13.5 | 34.3 | 0.029 | 0.74 |
| 6.0 | 15.2 | Not limited | | 14.0 | 35.6 | Not limited | | | |
| 6.5 | 16.5 | 8.0 | 20.3 | 15.0 | 38.1 | 18.0 | 45.7 | 0.036 | 0.91 |
| 8.0 | 20.3 | Not limited | | 19.0 | 48.3 | Not limited | | | |
| 9.5 | 24.1 | 11.5 | 29.2 | 21.0 | 53.3 | 25.0 | 63.5 | 0.045 | 1.14 |
| 12.0 | 30.5 | Not limited | | 28.0 | 71.1 | Not limited | | | |
| 14.0 | 35.6 | 16.0 | 40.6 | 30.0 | 76.2 | 37.0 | 94.0 | 0.058 | 1.47 |
| 18.0 | 45.7 | Not limited | | 42.0 | 106.7 | Not limited | | | |
| 20.0 | 50.8 | 25.0 | 63.4 | 45.0 | 114.3 | 55.0 | 139.7 | 0.075 | 1.91 |
| 25.0 | 63.5 | Not limited | | 60.0 | 152.4 | Not limited | | | |
| 29.0 | 73.7 | 36.0 | 91.4 | 64.0 | 162.6 | 78.0 | 198.1 | 0.095 | 2.41 |
| 37.0 | 94.0 | Not limited | | 87.0 | 221.0 | Not limited | | | |
| 42.0 | 106.7 | 53.0 | 134.6 | 93.0 | 236.2 | 114.0 | 289.6 | 0.122 | 3.10 |
| 52.0 | 132.1 | Not limited | | 123.0 | 312.4 | Not limited | | | |
| 60.0 | 152.4 | 74.0 | 188.0 | 130.0 | 330.2 | 160.0 | 406.4 | 0.153 | 3.89 |

[a] See 6.3.4 and 6.3.5.

[b] The width is the smaller dimension of a rectangular sheet metal piece which is part of an enclosure. Adjacent surfaces of an enclosure may have supports in common and be made of a single sheet.

[c] For panels which are not supported along one side, for example, side panels of boxes, the length of the unsupported side shall be limited to the dimensions specified unless the side in question is provided with a flange at least 1/2 inch (12.7 mm) wide.

[d] Sheet copper, brass, or aluminum for an enclosure intended for outdoor use – rainproof – shall not be less than 0.029 inch (0.74 mm) thick.

## Table 6.3
## Thickness of sheet metal for an enclosure of a ceiling-mounted product or an ionizer-collector frame assembly

| Maximum dimension, | | Maximum area of any surface, | | Minimum thickness, | | | | | | | | | | | |
|---|---|---|---|---|---|---|---|---|---|---|---|---|---|---|---|
| | | | | Steel | | | | | | | | Copper, brass, or aluminum | | | |
| | | | | Without supporting frame | | | | With supporting frame or equivalent reinforcing | | | | Without supporting frame, | | With supporting frame or equivalent reinforcing, | |
| | | | | Zinc coated, | | Uncoated, | | Zinc coated, | | Uncoated, | | | | | |
| inches | (mm) | feet$^2$ | ($m^2$) | inch | (mm) | inch | (mm) | inch | (mm) | inch | (mm) | inch | (mm) | inch | (mm) |
| 60 | 1.5 | 10.42 | 0.97 | 0.034 | 0.86 | 0.032 | 0.81 | 0.029 | 0.74 | 0.026 | 0.66 | 0.045 | 0.66 | 0.036 | 0.91 |
| | | Over | | | | | | | | | | | | | |
| 90 | 2.3 | 10.42 | 0.97 | 0.045 | 1.14 | 0.034 | 1.14 | 0.034 | 0.86 | 0.032 | 0.81 | 0.058 | 0.81 | 0.045 | 1.14 |
| Greater than | | Over | | | | | | | | | | | | | |
| 90 | 2.3 | 10.42 | 0.97 | 0.056 | 1.42 | 0.053 | 1.35 | 0.045 | 1.14 | 0.042 | 1.07 | 0.075 | 1.07 | 0.058 | 1.47 |

AVA Documents
Document Sharing Hub
Full document details: UL 867 2021

6.3.2 A sheet-metal wall to which a wiring system is to be connected in the field shall have a thickness of not less than:

a) 0.032 inch (0.81 mm) if uncoated steel,

b) 0.034 inch (0.86 mm) if galvanized steel, or

c) 0.045 inch (1.14 mm) if nonferrous.

6.3.2.1 Metallized or painted polymeric parts shall comply with Section 6A, Nonmetallic Parts.

6.3.3 Table 6.1 and Table 6.2 are based on a uniform deflection of the enclosure surface for any given load concentrated at the center of the surface regardless of metal thickness.

6.3.4 With reference to Table 6.1 – Table 6.3, a supporting frame is an angled structure, or channel, or a folded rigid section of sheet metal that is:

a) Rigidly attached to the enclosure surface,

b) Has essentially the same outside dimensions as the enclosure surface, and

c) Has sufficient torsional rigidity to resist the bending moments that may be applied by the enclosure surface if it is deflected.

6.3.5 Equivalent reinforcing may be accomplished by constructions that will produce a structure as rigid as one that is built with a frame of angles or channels. Construction types without a supporting frame include:

a) A single sheet with single formed flanges – formed edges;

b) A single sheet that is corrugated or ribbed; or

c) An enclosure surface loosely attached to a frame, for example, with spring clips.

6.3.6 The thickness of a sheet-steel enclosure of an ionizer-collector frame assembly shall be as specified in 6.3.2 and Table 6.3.

6.3.7 A duct-mounted product shall be provided with flanges that are acceptable for connection to a duct system on the air-inlet and air-outlet sides.

*Exception: In place of flanges, holes may be provided in the sides of the ionizer-collector frame assembly for the attachment of flanges or equivalent means to mount the product to the duct system.*

### 6.4 Portable products

6.4.1 A sheet-metal enclosure shall be evaluated with respect to its size, shape, thickness of metal, and its suitability for the application, considering the intended use of the complete air cleaner. The thickness of sheet steel shall not be less than 0.026 inch (0.66 mm) if uncoated or 0.030 inch (0.76 mm) if galvanized. Other sheet metal shall have a thickness not less than 0.036 inch (0.91 mm) except for small areas or for surfaces that are curved or otherwise reinforced.

6.4.2 A wooden cabinet or enclosure shall not be less than 1/2 inch (12.7 mm) thick.

Documents
Document Sharing Hub
Full document details: UL 867 2021

## 6A Nonmetallic Parts

6A.1 Except as specified in 6A.3, all nonmetallic parts shall comply with Sections 6A – 6C and the tests for each respective nonmetallic part as described in Table 51A.1.

6A.1.1 Nonmetallic fasteners used as a part of:

a) An enclosure or cabinet for other than a battery-operated appliance shall comply with the Fastener Strength Test, Section 51B; or

b) An enclosure of a battery-operated appliance shall comply with the Non-Metallic Enclosure Fastener Test, Section 51D.

6A.2 In addition to the requirement in 6A.1, nonmetallic materials serving as electrical insulation or located within 1/8 in (3 mm) of:

a) Line-voltage uninsulated live parts shall comply with the Electrical Insulation section in the Standard for Polymeric Materials – Use in Electrical Equipment Evaluations, UL 746C; or

b) High-voltage uninsulated live parts shall:

1) Comply with the High-Voltage Insulating Material Arcing Test, Section 51; or

2) Be used only with high-voltage uninsulated live parts that operate within the voltage and current limitations specified in the Partially Protected Parts Test, Section 37 if the product is rated 250 V or less.

6A.3 Nonmetallic parts not complying with 6A.1 shall be one of the following:

a) Air-cleaner filters that comply with Section 22, Filters;

b) A nonfunctional part having a total surface area of less than 1 $ft^2$ (0.093 $m^2$), located so it cannot propagate flame from one area to another or to other ignitable parts and does not connect a source of ignition to other ignitable parts; or

c) An insulating barrier of a size and location as specified in (b) and complying with 11.4.

## 6B Nonmetallic Materials

6B.1 Materials shall be classified with respect to flammability characteristics that are established by the tests specified in the Standard for Tests for Flammability of Plastic Materials for Parts in Devices and Appliances, UL 94.

6B.2 Materials shall be assigned flammability ratings based on greatest to least resistance to flame and are identified as: 5VA, 5VB, V-0, V-1, V-2, HF-1, HF-2, HB, and HBF.

6B.3 In reference to 6B.2, the assigned flammability rating shall be appropriate for the material-use application in accordance with Table 51A.1.

## 6C Nonmetallic Material Ignition Sources Separation

6C.1 A nonmetallic part shall be positioned as shown in Figure 6C.1 if the part:

a) Has a flame rating of HB as determined in accordance with Standard for Tests for Flammability of Plastic Materials for Parts in Devices and Appliances, UL 94; or

Documents
Document Sharing Hub
Full document details: UL 867 2021

b) Complies with either the Flammability – 12 mm Flame or the Flammability – 20 mm (3/4-Inch) Flame Test as specified in the Standard for Polymeric Materials – Use in Electrical Equipment Evaluations, UL 746C.

6C.2 A nonmetallic part as specified in 6C.1 shall be separated from ignition sources by means of a mechanical barrier, extending at least to the boundary surface of the space whenever such parts are located:

a) Below an ignition source and within Space A;

b) Above an ignition source and within Space B; and

c) In the vertical plane relative to an ignition source and within Space C.

6C.3 The nonmetallic parts referenced by 6C.1 shall be located such that the distance between:

a) Line-voltage wiring not employing VW-1 insulation and the nonmetallic parts shall be a minimum of 2 inches (51 mm); and

b) Any other ignition source and the nonmetallic parts shall be a minimum of 4 inches (102 mm).

6C.4 With reference to 6C.3 and Figure 6C.1, the minimum distance for the nonmetallic materials located:

a) Above the ignition source shall be as shown in Distance X + Y; and

b) In the vertical plane relative to the ignition source shall be as shown in straight-line Distance Z.

**Figure 6C.1**

**Separation of ignition sources from nonmetallic materials**

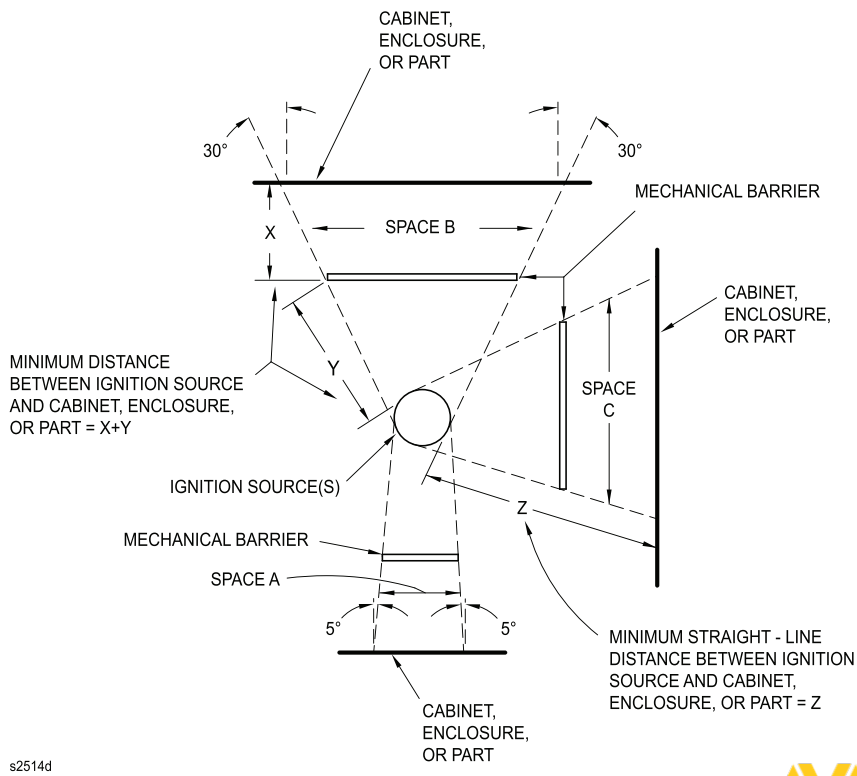


Documents
Document Sharing Hub
Full document details: UL 867 2021

## 7 Accessibility of Uninsulated Live Parts and Moving Parts

7.1 In reference to 7.5 and except as specified in 7.2, an opening in a cabinet or enclosure shall comply with the following to reduce the likelihood of unintentional contact that may involve a risk of electric shock from an uninsulated live part or film-coated (magnet) wire, or injury to persons from a moving part:

a) For an opening that has a minor dimension less than 1 inch (25.4 mm), a wire or moving part shall not be contacted by the probe illustrated in:

1) Figure 7.1; or

2) Figure 7.2, for those products intended only for ceiling mounting.

b) For an opening that has a minor dimension of 1 inch or more, such a part or wire shall be spaced from the opening as specified in Table 7.1.

Documents
Document Sharing Hub

Full document details: UL 867 2021

**Figure 7.1**

**Articulate probe with web stop**

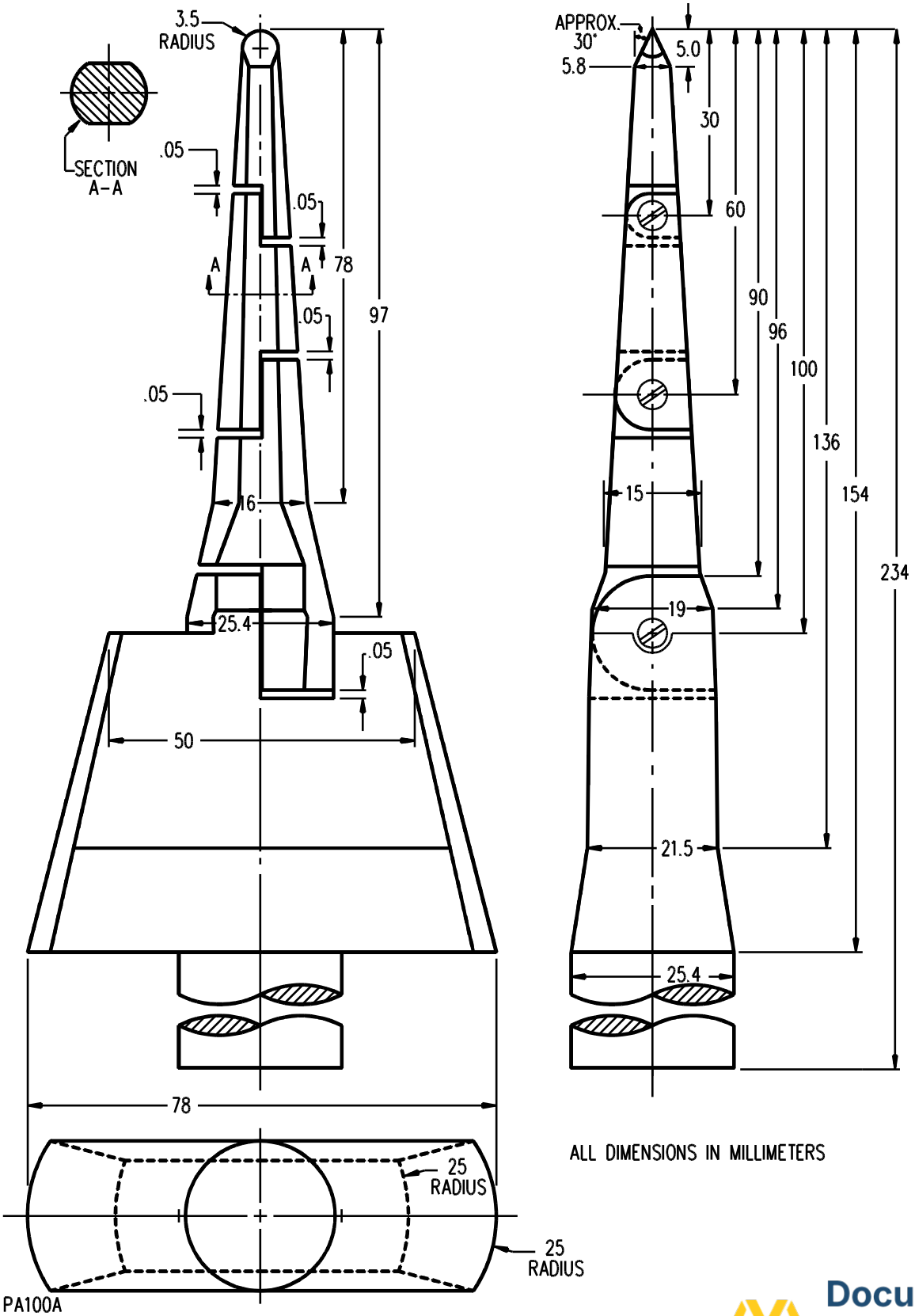


Documents
Document Sharing Hub
Full document details: UL 867 2021

**Figure 7.2**

**Probe for moving parts of a ceiling mounted air cleaner**

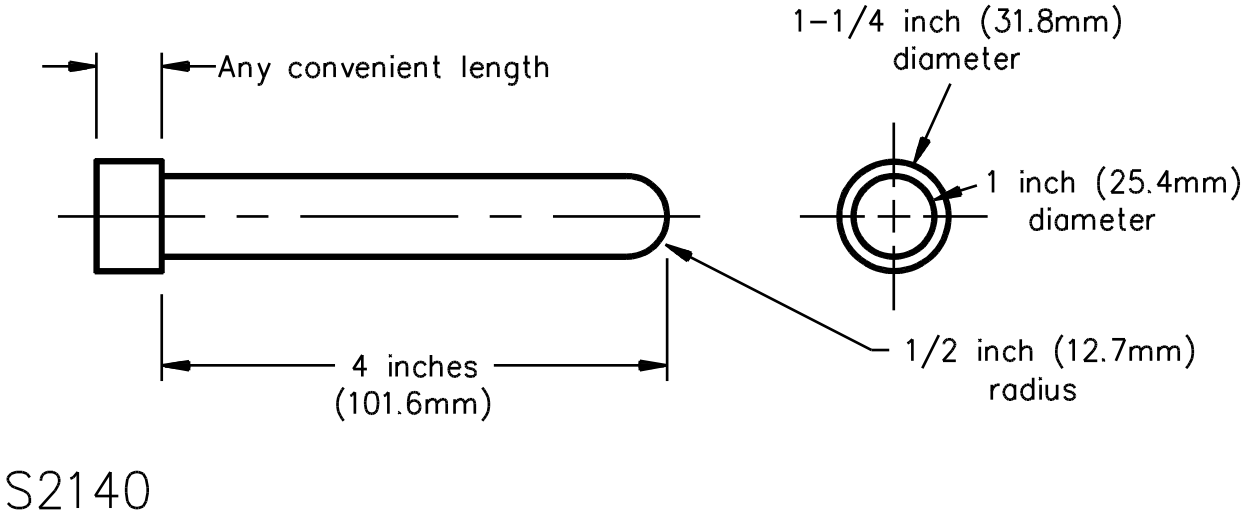


**Table 7.1**
**Minimum distance from an opening to a part that may involve a risk of electric shock or injury to persons**

| Minor dimension of opening,[a,b] | | Minimum distance from opening to part[b], | |
|---|---|---|---|
| inches | (mm) | inches | (mm) |
| 3/4[c] | 19.1 | 4-1/2 | 114.0 |
| 1[c] | 25.4 | 6-1/2 | 165.0 |
| 1-1/4 | 31.8 | 7-1/2 | 190.0 |
| 1-1/2 | 38.1 | 12-1/2 | 318.0 |
| 1-7/8 | 47.6 | 15-1/2 | 394.0 |
| 2-1/8 | 54.0 | 17-1/2 | 444.0 |
| See footnote d | | 30 | 762.0 |

[a] See 7.5.
[b] Between 3/4 and 2-1/8 inches, interpolation is to be used to determine a value between values specified in the table.
[c] Any dimension less than 1 inch applies to a motor only.
[d] More than 2-1/8 inches, but not more than 6 inches (152.0 mm).

7.2 In reference to 7.1, an opening in an integral enclosure of a motor shall:

a) Have a minor dimension less than 3/4 inch (19.1 mm) if:

1) A moving part cannot be contacted by the probe illustrated in Figure 7.3.

2) Film-coated (magnet) wire cannot be contacted by the probe illustrated in Figure 7.4.

Documents
Document Sharing Hub
Full document details: UL 867 2021

3) No uninsulated live part in a directly accessible motor, as described in 7.7, can be contacted by the probe illustrated in Figure 7.5.

4) No uninsulated live part in an indirectly accessible motor, as described in 7.6, can be contacted by the probe illustrated in Figure 7.3.

b) Be spaced not less than the distance specified in Table 7.1 from any wire or moving part if the opening has a minor dimension of 3/4 inch or more.

**Figure 7.3**

**Probe for moving parts and uninsulated live parts**

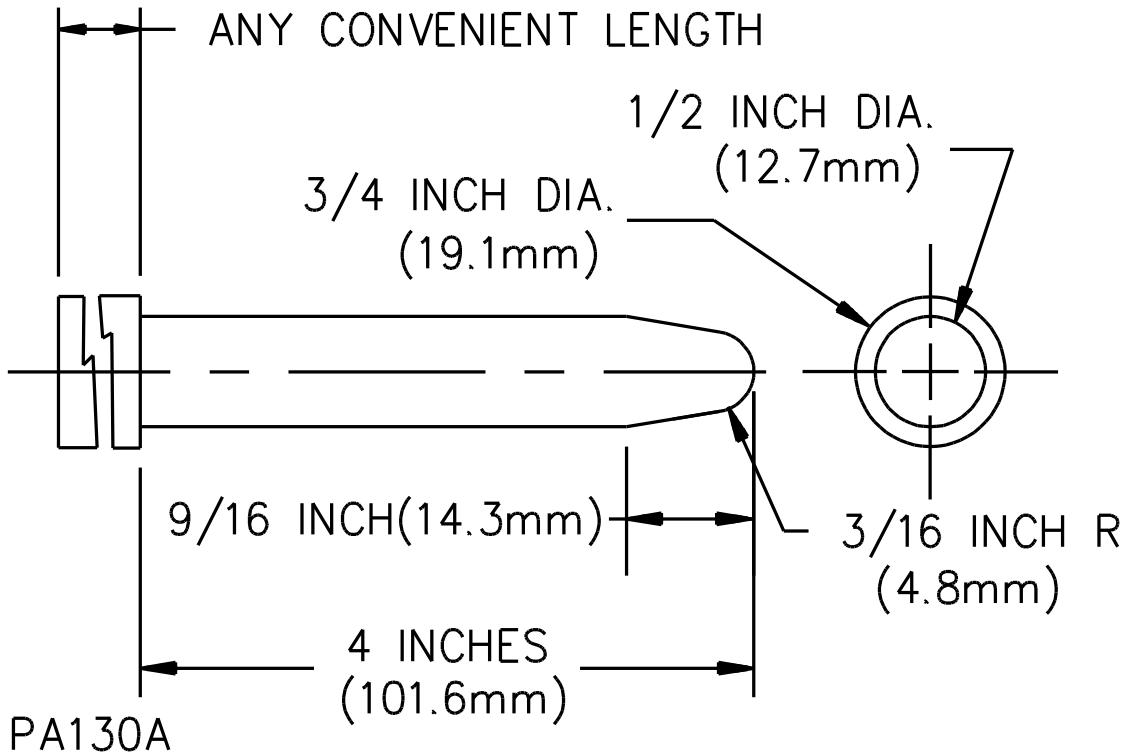


Documents
Document Sharing Hub
Full document details: UL 867 2021

**Figure 7.4**

**Probe for film-coated (magnet) wire**

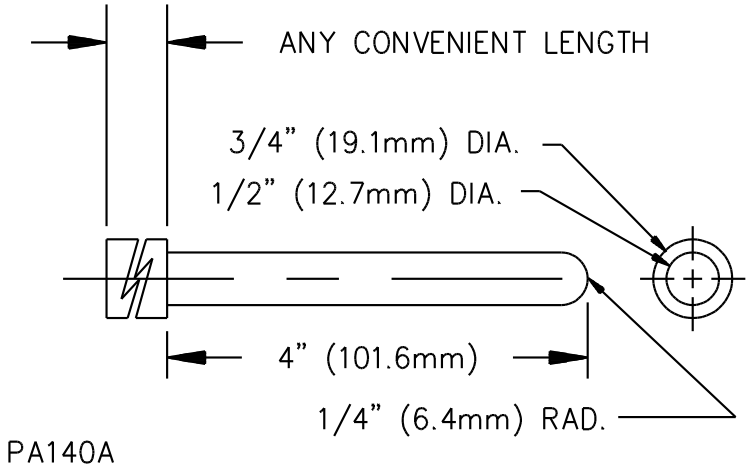


**Figure 7.5**

**Articulate probe**

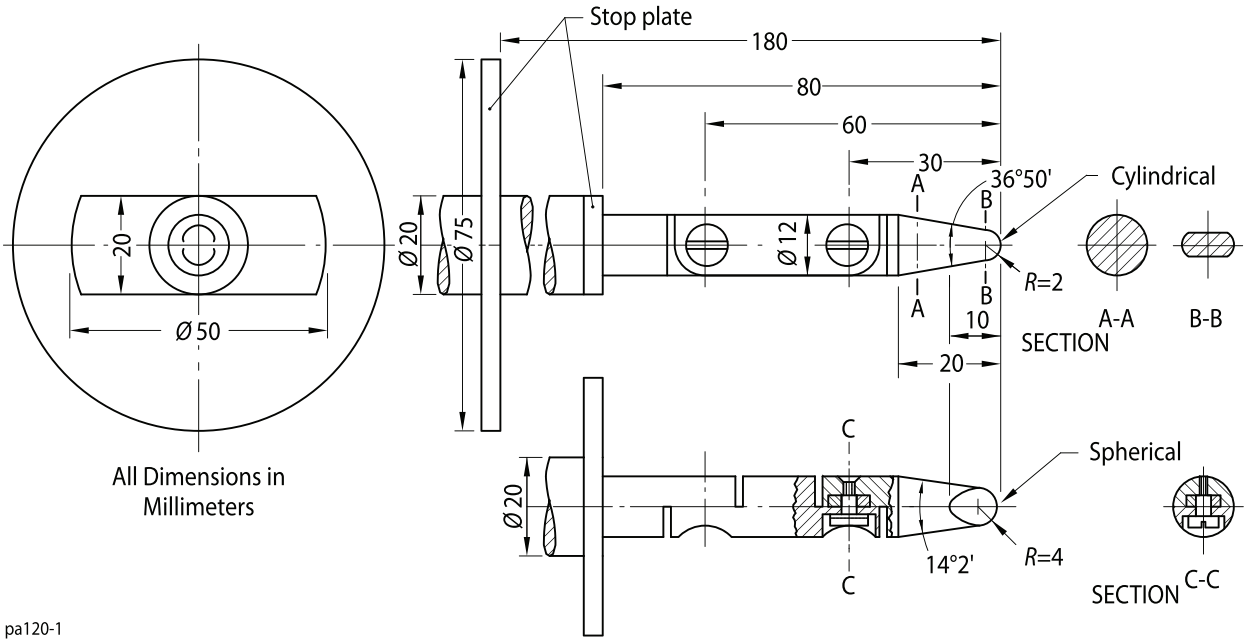


7.3 The probes mentioned in 7.1 and 7.2 and illustrated in Figure 7.1 – Figure 7.5 shall be applied to any depth that the opening will permit. They shall be rotated or angled before, during, and after insertion through the opening to any position that is necessary to examine the enclosure or cabinet. The probes illustrated in Figure 7.1 and Figure 7.5 shall be applied in any possible configuration. If necessary, the configuration shall be changed after insertion through the opening.

AVA Documents
Document Sharing Hub
Full document details: UL 867 2021

7.4 The probes mentioned in 7.3 and 7.5 are to be used as measuring instruments to evaluate the accessibility provided by an opening, and not as instruments to evaluate the strength of a material. They are to be applied with the minimum force necessary to determine accessibility.

7.5 With reference to the requirements in 7.1 and 7.2, the minor dimension of an opening is the diameter of the largest cylindrical probe having a hemispherical tip that can be inserted through the opening.

7.6 With reference to the requirements in 7.2, an indirectly accessible motor is a motor that is:

a) Accessible only by opening or removing a part of the cabinet, such as a guard or panel, that can be opened or removed without using a tool; or

b) Located at such a height or is otherwise guarded or enclosed so that it is unlikely to be contacted.

7.7 A directly accessible motor is a motor that:

a) Can be contacted without opening or removing any part or

b) Is located so as to be accessible to contact.

7.8 During the examination of a product to determine whether it complies with the requirements in 7.1 or 7.2, a part of the cabinet or enclosure that may be opened or removed by the user without using a tool shall be opened or removed.

7.9 With reference to the requirements in 7.1 and 7.2, insulated brush caps are not required to be additionally enclosed.

7.10 If the opening or removal of a door, a cover, or any other component required for user servicing permits access to a part that is considered to present a risk of electric shock (see 37.1), the door, cover, or component shall be provided with an interlock switch as specified in 29.2.1 – 29.2.5 to de-energize the primary circuit of the high-voltage power supply.

7.11 Unless a mechanical means is provided to discharge to ground any residual charge existing in the high-voltage parts after the primary circuit is de-energized, a time-delay feature shall be provided so that live parts do not become accessible until residual charges decay as required in 47.1.

## 8 Mechanical Assembly

### 8.1 General

8.1.1 A product shall be assembled so that it will not be adversely affected by the vibration of normal operation.

8.1.2 Provision shall be made for mounting a product securely. Bolts, screws, or other parts used for mounting the product shall be independent of those used for securing components of the product to the frame, base, or panel.

8.1.3 The mounting assembly shall be capable of supporting four times the weight of the product for 1 minute.

*Exception: A product that is intended to be mounted to a duct system need not comply with this requirement.*

Documents
Document Sharing Hub

Full document details: UL 867 2021

8.1.4 A switch, a lampholder, an attachment-plug receptacle, a motor-attachment plug, or similar component shall be mounted securely and shall be prevented from turning.

*Exception No. 1: A switch need not be prevented from turning if all four of the following conditions are met:*

*a) The switch is of a plunger or other type that does not tend to rotate. A toggle switch is considered to be subjected to forces that turn the switch during its normal operation.*

*b) It is unlikely that the operation of the switch will loosen its mounting means.*

*c) Spacings are not reduced below the minimum values if the switch rotates.*

*d) Normal operation of the switch is by mechanical means rather than by direct contact by persons.*

*Exception No. 2: A lampholder of the type in which the lamp cannot be replaced, such as for a neon pilot or indicator light in which the lamp is sealed by a nonremovable jewel, need not be prevented from turning if rotation cannot reduce the spacings below the minimum required values.*

8.1.5 Means for preventing the turning mentioned in 8.1.4 is to consist of more than friction between surfaces. For instance, a properly applied lock washer can be used as a means to prevent a small stem-mounted switch or other device having a single-hole mounting means from turning.

8.1.6 If a vertically-mounted switch or circuit breaker is such that movement of the operating handle results in one position being above the other position, the upper position shall be the on position.

*Exception: This requirement does not apply to horizontally- or rotationally-mounted switches, or switching devices with more than one on position, such as a double-throw or timer switch.*

## 8.2 Assembly for shipping

8.2.1 A product shall be completely assembled when it is shipped from the factory.

*Exception: A product may be shipped partially disassembled to facilitate packing or installation if the intended assembly can be accomplished readily without introduction of risk of fire, electric shock, or injury to persons.*

8.2.2 If mismatching of components of a product that is shipped disassembled presents a risk of fire, electric shock, or injury to persons, the parts shall be marked as specified in 56.2. See also 8.2.4.

8.2.3 If a cord-connected product is shipped partially disassembled, internal connections that must be made in the field shall be made by plug and receptacle connections. If a product intended for permanent connection to the power supply is shipped partially disassembled, internal connections that must be made in the field shall be made in accordance with 12.1.1.1 – 12.1.5.5 or by plug and receptacle connections.

8.2.4 A product that is shipped from the factory partially disassembled shall be shipped in a single shipping container or marked in accordance with 57.2.

## 8.3 Mechanical barriers

8.3.1 A mechanical barrier shall be formed from one or more of the following:

a) Metal with at least the thickness specified in Table 6.1 or Table 6.2 as provided under the columns titled “With supporting frame or equivalent reinforcing” for the dimensions of the mechanical barrier;

Documents
Document Sharing Hub
Full document details: UL 867 2021

b) A nonmetallic material of the necessary strength and rigidity and:

1) Rated 5VA; or

2) Evaluated to the 127 mm (5 inch) Flammability Test as described in the Standard for Polymeric Materials – Use in Electrical Equipment Evaluations, UL 746C;

c) Any other material or construction determined to be equivalent to (a) – (b).

## 9 Live Parts

9.1 A current-carrying part shall have the necessary mechanical strength and ampacity, and shall be made of a metal that can be used for the application.

9.2 An uninsulated live part shall be secured to its supporting surface by a means other than friction between surfaces so that it will be prevented from turning or shifting in position if such motion may result in a reduction of spacings below the minimum required values. The construction of a contact assembly shall be such that the alignment of the contacts will be maintained.

## 10 Protection Against Corrosion

### 10.1 Products intended for indoor use

10.1.1 Iron and steel parts shall be protected against corrosion by enameling, galvanizing, sherardizing, plating, or other means that have been determined to be equivalent.

*Exception No. 1: Small minor parts of iron or steel such as washers, screws, bolts, and the like that do not carry current.*

*Exception No. 2: Parts made of stainless steel are not required to be additionally protected against corrosion.*

*Exception No. 3: Bearings and other parts for which protection is impractical because of the function of the part.*

10.1.2 The requirement in 10.1.1 applies to all parts of the framework, cabinet and enclosure; all iron and steel current-carrying parts, except resistors; all spring-door fasteners; and other parts upon which proper mechanical operation may depend.

10.1.3 Iron and steel used within a cabinet or enclosure that is intended to be washed down during normal maintenance of the product shall be protected against corrosion. A zinc coating that withstands, without a fixed deposit, three 1-minute dips in a standard copper sulphate solution, or some other equivalent coating shall be used. Painting or baked enamel is not considered to provide the required protection.

10.1.4 Bonderized steel parts provided with a primer coat and covered by a baked-alkyd-enamel finish are considered to comply with the requirements in 10.1.3.

### 10.2 Products intended for outdoor use

10.2.1 A sheet-steel cabinet or enclosure intended for outdoor use shall be protected against corrosion by one of the following coatings:

Documents
Document Sharing Hub
Full document details: UL 867 2021