UL 907

Underwriters Laboratories Inc.

Standard for Safety

Fireplace Accessories

Copyright UL
Provided by IHS under license with UL
No reproduction or networking permitted without license from IHS
Licensee=North Carolina State Univ/5618801100
Not for Resale, 07/06/2013 20:13:51 MDT
Full document details: UL 907 2010

UL COPYRIGHTED MATERIAL –
NOT AUTHORIZED FOR FURTHER REPRODUCTION OR
DISTRIBUTION WITHOUT PERMISSION FROM UL

Documents
Document Sharing Hub

Copyright UL
Provided by IHS under license with UL
No reproduction or networking permitted without license from IHS
Full document details: UL 907 2010

Licensee=North Carolina State Univ/5618801100
Not for Resale, 07/06/2013 20:13:51 MDT

UL Standard for Safety for Fireplace Accessories, UL 907

Third Edition, Dated February 8, 2010

Summary of Topics

This revision of ANSI/UL 907 is being issued to update the title page to reflect reaffirmation of ANSI approval.

Text that has been changed in any manner or impacted by UL's electronic publishing system is marked with a vertical line in the margin. Changes in requirements are marked with a vertical line in the margin and are followed by an effective date note indicating the date of publication or the date on which the changed requirement becomes effective.

All rights reserved. No part of this publication may be reproduced, stored in a retrieval system, or transmitted in any form by any means, electronic, mechanical photocopying, recording, or otherwise without prior permission of UL.

UL provides this Standard ″as is″ without warranty of any kind, either expressed or implied, including but not limited to, the implied warranties of merchantability or fitness for any purpose.

In no event will UL be liable for any special, incidental, consequential, indirect or similar damages, including loss of profits, lost savings, loss of data, or any other damages arising out of the use of or the inability to use this Standard, even if UL or an authorized UL representative has been advised of the possibility of such damage. In no event shall UL's liability for any damage ever exceed the price paid for this Standard, regardless of the form of the claim.

Users of the electronic versions of UL's Standards for Safety agree to defend, indemnify, and hold UL harmless from and against any loss, expense, liability, damage, claim, or judgment (including reasonable attorney's fees) resulting from any error or deviation introduced while purchaser is storing an electronic Standard on the purchaser's computer system.

The requirements in this Standard are now in effect, except for those paragraphs, sections, tables, figures, and/or other elements of the Standard having future effective dates as indicated in the note following the affected item. The prior text for requirements that have been revised and that have a future effective date are located after the Standard, and are preceded by a ″SUPERSEDED REQUIREMENTS″ notice.

UL COPYRIGHTED MATERIAL –
NOT AUTHORIZED FOR FURTHER REPRODUCTION OR
DISTRIBUTION WITHOUT PERMISSION FROM UL

Documents
Document Sharing Hub

Copyright UL
Provided by IHS under license with UL
No reproduction or networking permitted without license from IHS
Full document details: UL 907 2010

Licensee=North Carolina State Univ/5618801100
Not for Resale, 07/06/2013 20:13:51 MDT

No Text on This Page

UL COPYRIGHTED MATERIAL –
NOT AUTHORIZED FOR FURTHER REPRODUCTION OR
DISTRIBUTION WITHOUT PERMISSION FROM UL

Documents
Document Sharing Hub

Copyright UL
Provided by IHS under license with UL
No reproduction or networking permitted without license from IHS
Full document details: UL 907 2010

Licensee=North Carolina State Univ/5618801100
Not for Resale, 07/06/2013 20:13:51 MDT

UL 907

Standard for Fireplace Accessories

First Edition – March, 1989
Second Edition – September, 1994

Third Edition

February 8, 2010

This ANSI/UL Standard for Safety consists of the Third edition including revisions through April 6, 2010.

The most recent designation of UL 907 as a Reaffirmed American National Standard (ANS) occurred on April 6, 2010. ANSI approval for a standard does not include the Cover Page, Transmittal Pages, Title Page, or effective date information.

Comments or proposals for revisions on any part of the Standard may be submitted to UL at any time. Proposals should be submitted via a Proposal Request in UL's On-Line Collaborative Standards Development System (CSDS) at http://csds.ul.com.

UL's Standards for Safety are copyrighted by UL. Neither a printed nor electronic copy of a Standard should be altered in any way. All of UL's Standards and all copyrights, ownerships, and rights regarding those Standards shall remain the sole and exclusive property of UL.

COPYRIGHT © 2010 UNDERWRITERS LABORATORIES INC.

UL COPYRIGHTED MATERIAL –
NOT AUTHORIZED FOR FURTHER REPRODUCTION OR
DISTRIBUTION WITHOUT PERMISSION FROM UL

Documents
Document Sharing Hub

Copyright UL
Provided by IHS under license with UL
No reproduction or networking permitted without license from IHS
Full document details: UL 907 2010

Licensee=North Carolina State Univ/5618801100
Not for Resale, 07/06/2013 20:13:51 MDT

No Text on This Page

UL COPYRIGHTED MATERIAL –
NOT AUTHORIZED FOR FURTHER REPRODUCTION OR
DISTRIBUTION WITHOUT PERMISSION FROM UL

Documents
Document Sharing Hub

Copyright UL
Provided by IHS under license with UL
No reproduction or networking permitted without license from IHS
Full document details: UL 907 2010

Licensee=North Carolina State Univ/5618801100
Not for Resale, 07/06/2013 20:13:51 MDT

CONTENTS

INTRODUCTION

1 Scope 5
2 Components 5
3 Units of Measurement 6
4 Terminology 6
5 Undated References 6
6 Glossary 6

CONSTRUCTION

7 Materials 7
8 Assembly 8
8.1 General 8
8.2 Separable handle 9
8.3 Firescreen 10

PERFORMANCE

9 General 10
10 Test Installation 11
11 Temperature Measurement 17
12 Fire Tests 24
13 Radiant Fire Test 25
14 Brand Fire Test 32
15 Flash Fire Test 35
16 Glazing Test 36
16.1 General 36
16.2 Impact test 36
16.3 Water shock test 37
17 Carbon Monoxide Monitoring Test 38

BLOWER ASSEMBLY

GENERAL

18 General 39

CONSTRUCTION

19 Enclosure 39
19.1 General 39
19.2 Mechanical protection 43
19.3 Electrical protection 44
19.4 Doors and covers 47
20 Mounting of Electrical Components 48
21 Field-Installed Blower Assemblies 49
22 Field Supply Connections 50
22.1 Permanently-connected products 50
22.2 Cord-connected products 52

UL COPYRIGHTED MATERIAL –
NOT AUTHORIZED FOR FURTHER REPRODUCTION OR
DISTRIBUTION WITHOUT PERMISSION FROM UL
Documents
Document Sharing Hub

Copyright UL
Provided by IHS under license with UL
No reproduction or networking permitted without license from IHS
Full document details: UL 907 2010
Licensee=North Carolina State Univ/5618801100
Not for Resale, 07/06/2013 20:13:51 MDT

23 Grounding 52
23.1 General 52
23.2 Permanently-connected products 53
23.3 Cord-connected products 54
24 Internal Wiring 54
24.1 General 54
24.2 Methods 55
25 Separation of Circuits 57
26 Bonding for Grounding 58
27 Capacitors 60
28 Insulating Material 61
29 Motors and Motor Overcurrent (Overload) Protection 61
30 Switches and Controllers 65
31 Transformers 65
32 Spacings 66

PERFORMANCE

33 Test Voltages 69
34 Temperature Measurements 70
34.1 Thermocouple method 70
34.2 Change-in-resistance method 70
35 Input Test 71
36 Temperature Test – Electrical Components 71
37 Dielectric Voltage-Withstand Test 71
38 Leakage Current Test 72
39 Stalled Motor Test 75
40 Strain Relief Test 75
40.1 Power supply cord 75
40.2 Field wiring leads 75
41 Push-Back Relief Test 75
42 Short-Circuit Test 76
43 Knockout Test 76

MANUFACTURING AND PRODUCTION TESTS

44 Production-Line Dielectric Voltage-Withstand Test 76
45 Production Line Grounding Continuity Test 77

MARKING

46 General 77
47 Installation and Operating Instructions 80
47.1 General 80
47.2 Installation instructions 80
47.3 Operating instructions 82

APPENDIX A

Standards for Components A1

UL COPYRIGHTED MATERIAL –
NOT AUTHORIZED FOR FURTHER REPRODUCTION OR
DISTRIBUTION WITHOUT PERMISSION FROM UL
Documents
Document Sharing Hub
Copyright UL
Provided by IHS under license with UL
No reproduction or networking permitted without license from IHS
Full document details: UL 907 2010
Licensee=North Carolina State Univ/5618801100
Not for Resale, 07/06/2013 20:13:51 MDT

INTRODUCTION

1 Scope

1.1 These requirements apply to fireplace accessories that are intended only for field installation into or attachment to existing masonry fireplaces. Fireplace accessories include items such as heat exchangers, glass door assemblies, and the like. For the purpose of these requirements, fireplace accessories do not include fireplace inserts or devices that incorporate a closed fire chamber.

1.2 Fireplace accessories as covered by these requirements are intended for installation in accordance with the Standard for Chimneys, Fireplaces, Vents and Solid Fuel Burning Appliances, NFPA 211, and in accordance with codes such as the International Building Code, International Mechanical Code, and related mechanical codes.

1.3 A fireplace accessory, as covered by these requirements, is intended for use with solid wood fuel, as specified by the manufacturer.

1.4 These accessories may include:

a) Field-installed cord-connected or fixed blower assemblies, and

b) Other field-installed electrical accessories rated at 250 volts or less to be employed in ordinary locations in accordance with the National Electrical Code, NFPA 70.

2 Components

2.1 Except as indicated in 2.2, a component of a product covered by this standard shall comply with the requirements for that component. See Appendix A for a list of standards covering components generally used in the products covered by this standard.

2.2 A component is not required to comply with a specific requirement that:

a) Involves a feature or characteristic not required in the application of the component in the product covered by this standard, or

b) Is superseded by a requirement in this standard.

2.3 A component shall be used in accordance with its rating established for the intended conditions of use.

2.4 Specific components are incomplete in construction features or restricted in performance capabilities. Such components are intended for use only under limited conditions, such as certain temperatures not exceeding specified limits, and shall be used only under those specific conditions.

UL COPYRIGHTED MATERIAL –
NOT AUTHORIZED FOR FURTHER REPRODUCTION OR
DISTRIBUTION WITHOUT PERMISSION FROM UL

Documents
Document Sharing Hub

Copyright UL
Provided by IHS under license with UL
No reproduction or networking permitted without license from IHS
Full document details: UL 907 2010

Licensee=North Carolina State Univ/5618801100
Not for Resale, 07/06/2013 20:13:51 MDT

3 Units of Measurement

3.1 Values stated without parentheses are the requirement. Values in parentheses are explanatory or approximate information.

4 Terminology

4.1 The term ″product″ as used in these requirements refers to all fireplace accessories or any part thereof covered by these requirements unless specifically noted otherwise.

5 Undated References

5.1 Any undated reference to a code or standard appearing in the requirements of this standard shall be interpreted as referring to the latest edition of that code or standard.

6 Glossary

6.1 For the purpose of this standard, the following definitions apply.

6.2 COMBUSTIBLE MATERIAL, NONCOMBUSTIBLE MATERIAL – These terms, as used in this standard, are defined in the Standard for Chimneys, Fireplaces, Vents, and Solid Fuel-Burning Appliances, NFPA 211.

6.3 DOOR ASSEMBLY – A factory-built device intended for field attachment to the front of a fireplace.

6.4 FIREPLACE, MASONRY – A field constructed assembly that is built in accordance with the Standard for Chimneys, Fireplaces, Vents and Solid Fuel Burning Appliances, NFPA 211, or other nationally recognized code requirements.

6.5 FIREPLACE ENCLOSURE – The combustible building materials adjacent to the masonry fireplace test fixture consisting of walls, ceiling, floor, and the like.

6.6 FIRESCREEN – A device that attaches to the fireplace accessory, consisting of a mesh type screen, used to reduce the risk of sparks exiting the fire chamber.

6.7 GRATE – A metal frame for supporting fuel within a fireplace accessory.

6.8 HEARTH – The floor area within a fire chamber.

6.9 HEARTH EXTENSION – The floor area outside a fireplace fire chamber consisting of noncombustible material.

6.10 HEAT EXCHANGER – A factory-built device for use with a fireplace consisting of tubes or ducts that are intended to expel heated air into a room, zone or space to be heated. A device that incorporates a closed fire chamber is not considered a heat exchanger.

6.11 REFLECTOR – A product intended to reflect additional radiant heat from the fireplace.

6.12 REFRACTORY – A noncombustible material used in the construction of a fireplace or fireplace accessory.

6.13 REMOTE COMBUSTION AIR – Combustion air introduced into a fireplace that comes from a room, zone, or space other than that in which the fireplace is located.

UL COPYRIGHTED MATERIAL –
NOT AUTHORIZED FOR FURTHER REPRODUCTION OR
DISTRIBUTION WITHOUT PERMISSION FROM UL

Documents
Document Sharing Hub

Copyright UL
Provided by IHS under license with UL
No reproduction or networking permitted without license from IHS
Full document details: UL 907 2010

Licensee=North Carolina State Univ/5618801100
Not for Resale, 07/06/2013 20:13:51 MDT

CONSTRUCTION

7 Materials

7.1 A fireplace accessory or part shall be made of noncombustible corrosion-resistant materials. Metals shall be used in combinations that are galvanically compatible at any location within the assembly.

7.2 The minimum thickness of metal, including coatings where shown, shall comply with Table 7.1.

Exception No. 1: This requirement does not apply to electrical enclosures. See Enclosure, Section 19.

Exception No. 2: This requirement does not apply to decorative parts.

Table 7.1
Minimum metal thickness

Metal	Inch	(mm)
Aluminum alloys	0.016	(0.41)
Steel (uncoated, painted or plated)	0.042	(1.07)
Galvanized Steel (G90 coating class)	0.018	(0.46)
Galvanized steel (G60 coating class)	0.025	(0.64)
Aluminum-coated steel Type T1-40 (regular)		
[0.40 ounces per square foot (0.12 kg/m^2)]	0.018	(0.46)
Stainless steel	0.012	(0.30)

7.3 Thermal insulation material shall be of a metal or mineral base.

7.4 Thermal insulation shall comply with the following conditions when the fireplace accessory is tested in accordance with these requirements.

a) The products resulting from the combustion or volatilization of any combustible binder shall be discharged to the chimney.

b) The insulating material shall remain in its intended position.

c) The thermal conductivity of the insulating material shall not be increased.

d) The thermal insulation shall not show evidence of softening, melting, or deterioration.

7.5 Thermal insulation shall be protected against contact with the products of combustion.

7.6 Thermal insulation that is not self-supporting shall be applied to solid surfaces so that the insulation does not sag. An adhesive or cement used to attach such material shall retain its adhesive qualities at any temperature the adhesive may attain when tested in accordance with these requirements and at 0°F (minus 17.8°C).

UL COPYRIGHTED MATERIAL –
NOT AUTHORIZED FOR FURTHER REPRODUCTION OR
DISTRIBUTION WITHOUT PERMISSION FROM UL

Documents
Document Sharing Hub

Copyright UL
Provided by IHS under license with UL
No reproduction or networking permitted without license from IHS
Full document details: UL 907 2010

Licensee=North Carolina State Univ/5618801100
Not for Resale, 07/06/2013 20:13:51 MDT

7.7 A water-absorbing insulating material shall be protected against wetting by condensation or rain when installed as intended.

7.8 Asbestos and asbestos-containing material shall not be used.

8 Assembly

8.1 General

8.1.1 A fireplace accessory and related parts shall be constructed and assembled to have the strength, rigidity, and durability to withstand damage during tests in accordance with these requirements and during handling and installation.

8.1.2 A joint in a metal surface of a fire chamber or flue gas passageway shall be made tight by being welded, lock-seamed, riveted, bolted, or the like. A joint shall not depend primarily upon cement for tightness.

8.1.3 A fireplace accessory shall be provided with all the parts necessary for the intended installation of a complete unit. Each part or assembly shall be constructed for ready attachment of one to the other without requiring alteration, cutting, threading, drilling, welding, or similar task by the installer.

Exception: An assembly or component part intended to be cut to length or to be fitted by the installer may be provided if means are furnished for joining any altered part to a companion part or assembly. All fasteners required to complete the assembly shall be provided with the product by the manufacturer. Drilling is acceptable if:

a) The drilling operation does not weaken the assembly or drill into the fire chamber, and

b) The size of the required drill bit is specified and instructions clearly describe the locations to be drilled, such as by the use of templates, drawings, descriptions, or the like.

8.1.4 Insulating materials shall be an integral part of the device if required to protect combustible parts of the building when the fireplace accessory is installed in accordance with the manufacturer's instructions.

Exception: Fire chamber insulating materials may be packaged and shipped with the fireplace accessory if:

a) The installation instructions include a description of the method of placement of this material, and

b) The fireplace accessory is provided with a marking indicating that the material is to be installed before firing.

The marking shall be located in an area visible to the user before firing the unit.

8.1.5 Two or more parts or subassemblies that must bear a definite relationship to each other shall be:

a) Arranged and constructed to permit them to be incorporated into the complete assembly without need for alteration or alignment and only in the correct relationship with each other, or

b) Assembled and shipped from the factory as one element.

UL COPYRIGHTED MATERIAL –
NOT AUTHORIZED FOR FURTHER REPRODUCTION OR
DISTRIBUTION WITHOUT PERMISSION FROM UL

Documents
Document Sharing Hub

Copyright UL
Provided by IHS under license with UL
No reproduction or networking permitted without license from IHS
Full document details: UL 907 2010

Licensee=North Carolina State Univ/5618801100
Not for Resale, 07/06/2013 20:13:51 MDT

8.1.6 If a part of a fireplace accessory is necessary to limit temperatures on adjacent construction:

a) The part shall be factory-attached, or

b) The fireplace accessory shall comply with all of the following:

1) The temperature-limiting part shall be:

i) Shipped with the fireplace accessory, or

ii) Marked with the name or trademark of the manufacturer or private labeler, with a catalog number or equivalent designation, and with the type of equipment with which it is intended to be used.

The associated fireplace accessory shall be marked to indicate the catalog number or equivalent designation of such a part, and the name of the manufacturer or private labeler of that part.

2) Assembly of the part shall be in accordance with the requirements in 8.1.3.

3) The installation instructions shall define and illustrate the intended assembly of the part.

8.1.7 The fireplace accessory shall have no edges, corners or projections that present a risk of a cut or puncture-type injury to persons.

8.1.8 A radiation shield or baffle shall be constructed, formed, and supported to provide the intended positioning and to prevent distortion or sagging when tested in accordance with these requirements.

8.2 Separable handle

8.2.1 A separable handle, if provided, shall not remain in position when the user's hand is withdrawn following use.

8.2.2 Storage means shall be provided on the product for separable handles so that when the handle is stored as intended, during the Radiant Fire Test, Section 13, and Brand Fire Test, Section 14, the temperatures on the separable handle do not exceed the temperature limits shown in Table 13.1.

UL COPYRIGHTED MATERIAL –
NOT AUTHORIZED FOR FURTHER REPRODUCTION OR
DISTRIBUTION WITHOUT PERMISSION FROM UL

Documents
Document Sharing Hub

Copyright UL
Provided by IHS under license with UL
No reproduction or networking permitted without license from IHS
Full document details: UL 907 2010

Licensee=North Carolina State Univ/5618801100
Not for Resale, 07/06/2013 20:13:51 MDT

8.3 Firescreen

8.3.1 A firescreen shall be furnished by the manufacturer as part of the fireplace accessory if the existing firescreen cannot be used after installation of the fireplace accessory. Doors are considered a firescreen.

PERFORMANCE

9 General

9.1 When a fireplace accessory is tested in accordance with these requirements, specified temperatures on combustible construction shall be maintained.

9.2 The draft created by the fireplace during its intended operation shall not cause the spillage of the products of combustion from the fireplace or the fireplace accessory into the area served by the device.

9.3 After being tested in accordance with these requirements, the fireplace accessory assembly shall be acceptable for further use.

9.4 Test results indicating compliance with the requirements of 9.3 include the following:

a) No part of the fireplace accessory has become damaged or permanently distorted to an extent that it will not continue to function as intended.

b) The effectiveness of any required protective coating or finish has not been reduced.

c) A ceramic material shows no evidence of cracking, disintegration, or spalling to an extent that the serviceability of any part of an assembly is impaired.

d) Cracks are not observable in porcelain enamel used as required protective coating when the surface is examined under a microscope of 60 magnification.

e) The reflectivity of a surface has not been impaired if the reflectivity is utilized to reduce the risk of fire.

f) Burning or scaling of metal parts is not evident upon visual observation.

g) The effectiveness of insulating material has not been reduced.

UL COPYRIGHTED MATERIAL –
NOT AUTHORIZED FOR FURTHER REPRODUCTION OR
DISTRIBUTION WITHOUT PERMISSION FROM UL

Documents
Document Sharing Hub

Copyright UL
Provided by IHS under license with UL
No reproduction or networking permitted without license from IHS
Full document details: UL 907 2010

Licensee=North Carolina State Univ/5618801100
Not for Resale, 07/06/2013 20:13:51 MDT

10 Test Installation

10.1 Tests are to be conducted as described in 10.2 – 10.14. If the fireplace accessory is manufactured in more than one size (for example, to accommodate various sizes of fireplaces), tests are to be conducted on as many sizes as may be deemed necessary to determine compliance with these requirements.

10.2 The sample is to be installed in a test fixture having a 36 inch (914 mm) wide opening unless the installation instructions specify installation in a larger fireplace, in which case the sample is to be installed in a test fixture having a 48-inch (1.22-mm) wide opening.

10.3 The test fireplace is to be constructed as specified in Figures 10.1 – 10.4.

UL COPYRIGHTED MATERIAL –
NOT AUTHORIZED FOR FURTHER REPRODUCTION OR
DISTRIBUTION WITHOUT PERMISSION FROM UL

Documents
Document Sharing Hub

Copyright UL
Provided by IHS under license with UL
No reproduction or networking permitted without license from IHS
Full document details: UL 907 2010

Licensee=North Carolina State Univ/5618801100
Not for Resale, 07/06/2013 20:13:51 MDT

Figure 10.1
Masonry fireplace – front elevation

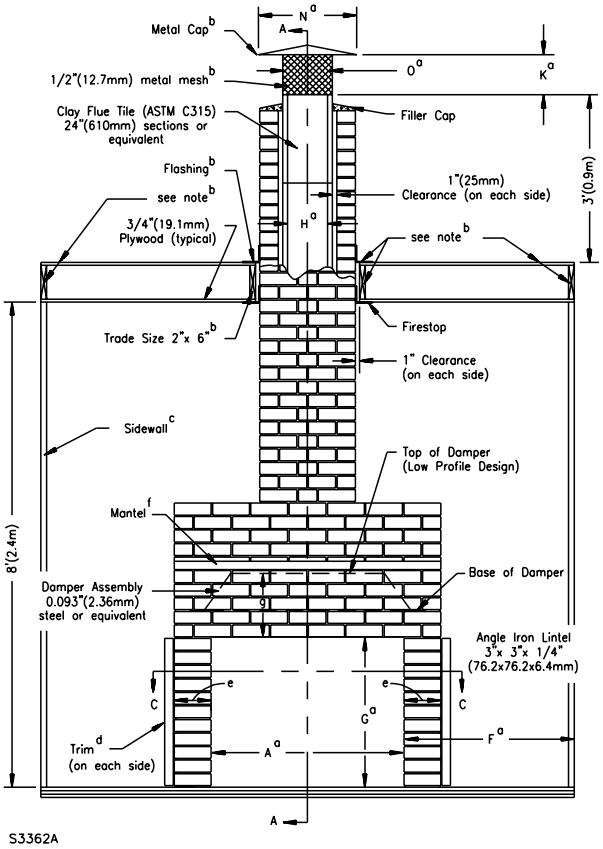

Metric conversions, lumber		
Trade size, inches	Nominal size	
	inches	mm
2 x 6	1-1/2 x 5-1/2	38 x 140

[a] See Table 10.1 for dimension.

[b] Optional features.

[c] See Figure 11.4 for thermocouple locations.

[d] See Figure 11.3 for thermocouple locations.

[e] Minimum distance from fireplace opening specified in installation instructions. Thermocouples not required when trim is at least 6 inches (152 mm) from the fireplace openings.

[f] See Figure 11.5 for thermocouple locations.

[g] Minimum distance above fireplace opening specified in installation instructions. Thermocouples not required when mantel is at least 12 inches (305 mm) above fireplace opening.

UL COPYRIGHTED MATERIAL –
NOT AUTHORIZED FOR FURTHER REPRODUCTION OR
DISTRIBUTION WITHOUT PERMISSION FROM UL

Documents
Document Sharing Hub

Copyright UL
Provided by IHS under license with UL
No reproduction or networking permitted without license from IHS
Full document details: UL 907 2010

Licensee=North Carolina State Univ/5618801100
Not for Resale, 07/06/2013 20:13:51 MDT

Figure 10.2
Section A – A of figure 10.1

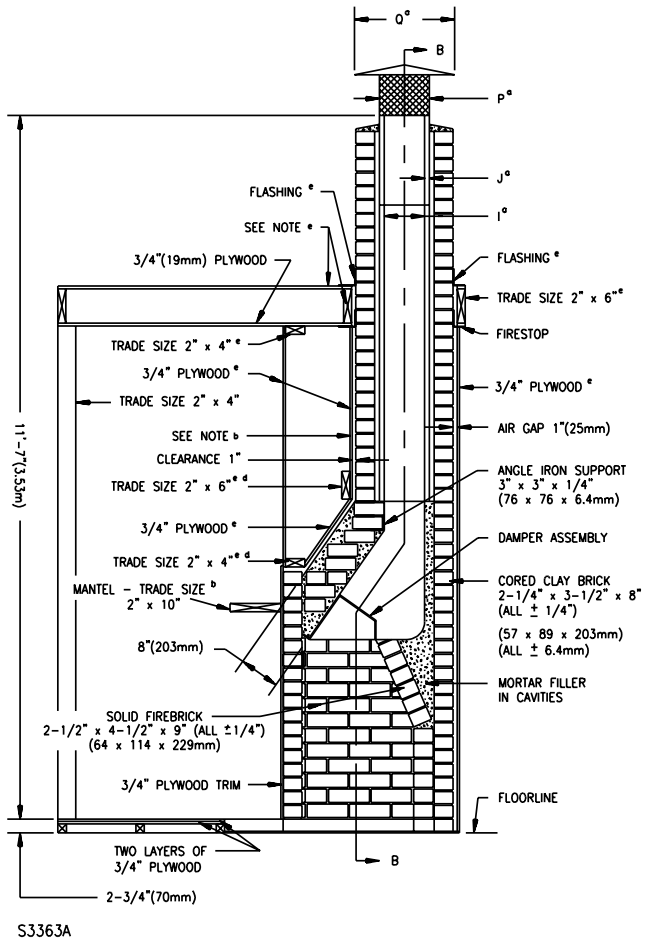

Metric conversions, lumber		
Trade size, inches	Nominal size	
	inches	mm
2 x 4	1-1/2 x 3-1/2	38 x 89
2 x 6	1-1/2 x 5-1/2	38 x 140
2 x 10	1-1/2 x 9-1/2	38 x 241

[a] See Table 10.1 for dimension

[b] See Figure 11.5 for thermocouple locations

[c] See Figure 11.3 for thermocouple locations

[d] 1 inch air space to be maintained between masonry and plywood, 2 x 4 inches and 2 x 6 inches. Ends of headers may be supported with noncombustible spacers to maintain clearance.

[e] Optional features

UL COPYRIGHTED MATERIAL –
NOT AUTHORIZED FOR FURTHER REPRODUCTION OR
DISTRIBUTION WITHOUT PERMISSION FROM UL

Documents
Document Sharing Hub

Copyright UL
Provided by IHS under license with UL
No reproduction or networking permitted without license from IHS
Full document details: UL 907 2010

Licensee=North Carolina State Univ/5618801100
Not for Resale, 07/06/2013 20:13:51 MDT

Figure 10.3
Section B – B of figure 10.2

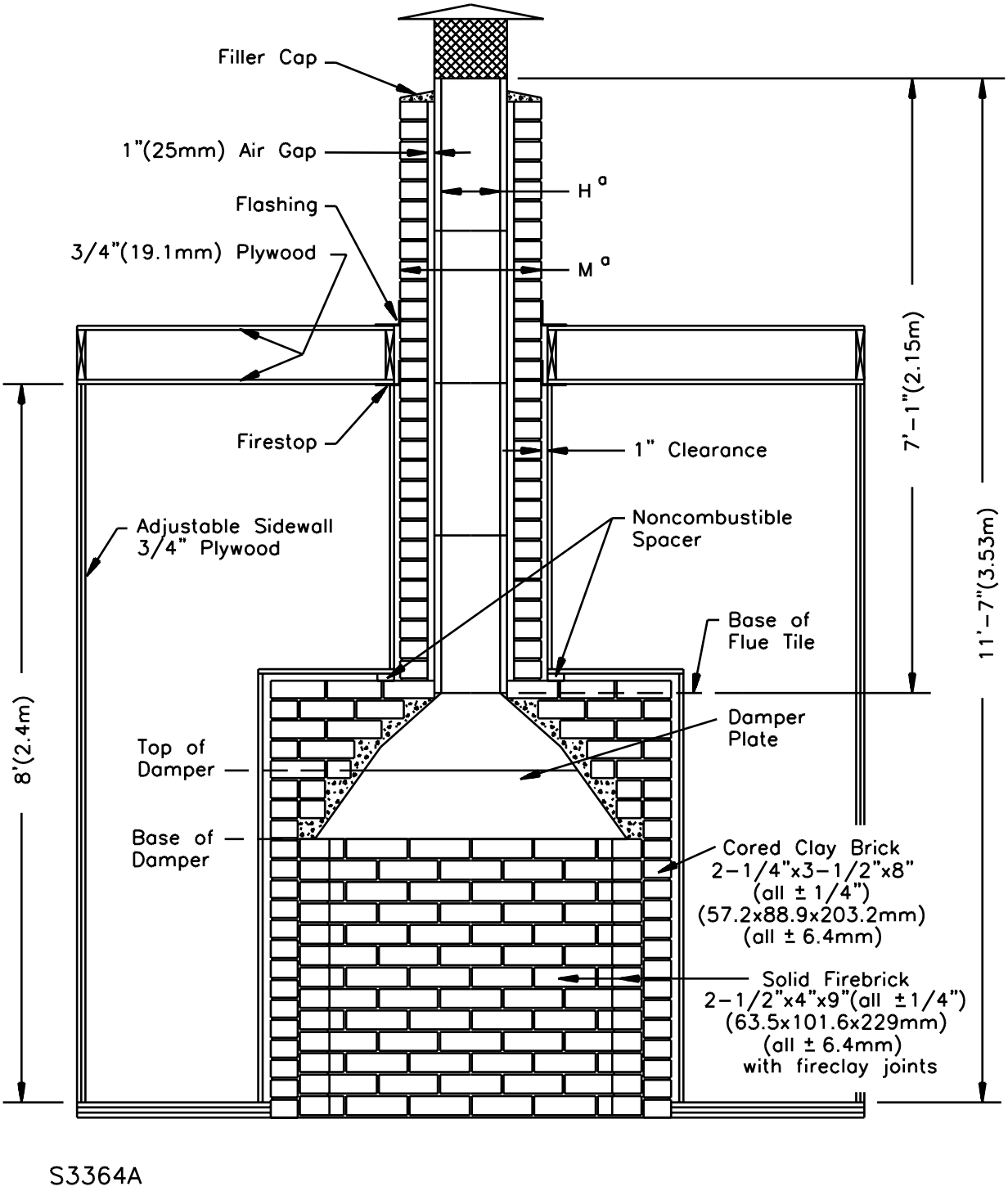

[a] See Table 10.1 for dimension

UL COPYRIGHTED MATERIAL –
NOT AUTHORIZED FOR FURTHER REPRODUCTION OR
DISTRIBUTION WITHOUT PERMISSION FROM UL

Documents
Document Sharing Hub

Copyright UL
Provided by IHS under license with UL
No reproduction or networking permitted without license from IHS
Full document details: UL 907 2010

Licensee=North Carolina State Univ/5618801100
Not for Resale, 07/06/2013 20:13:51 MDT

Figure 10.4
Section C – C of figure 10.1

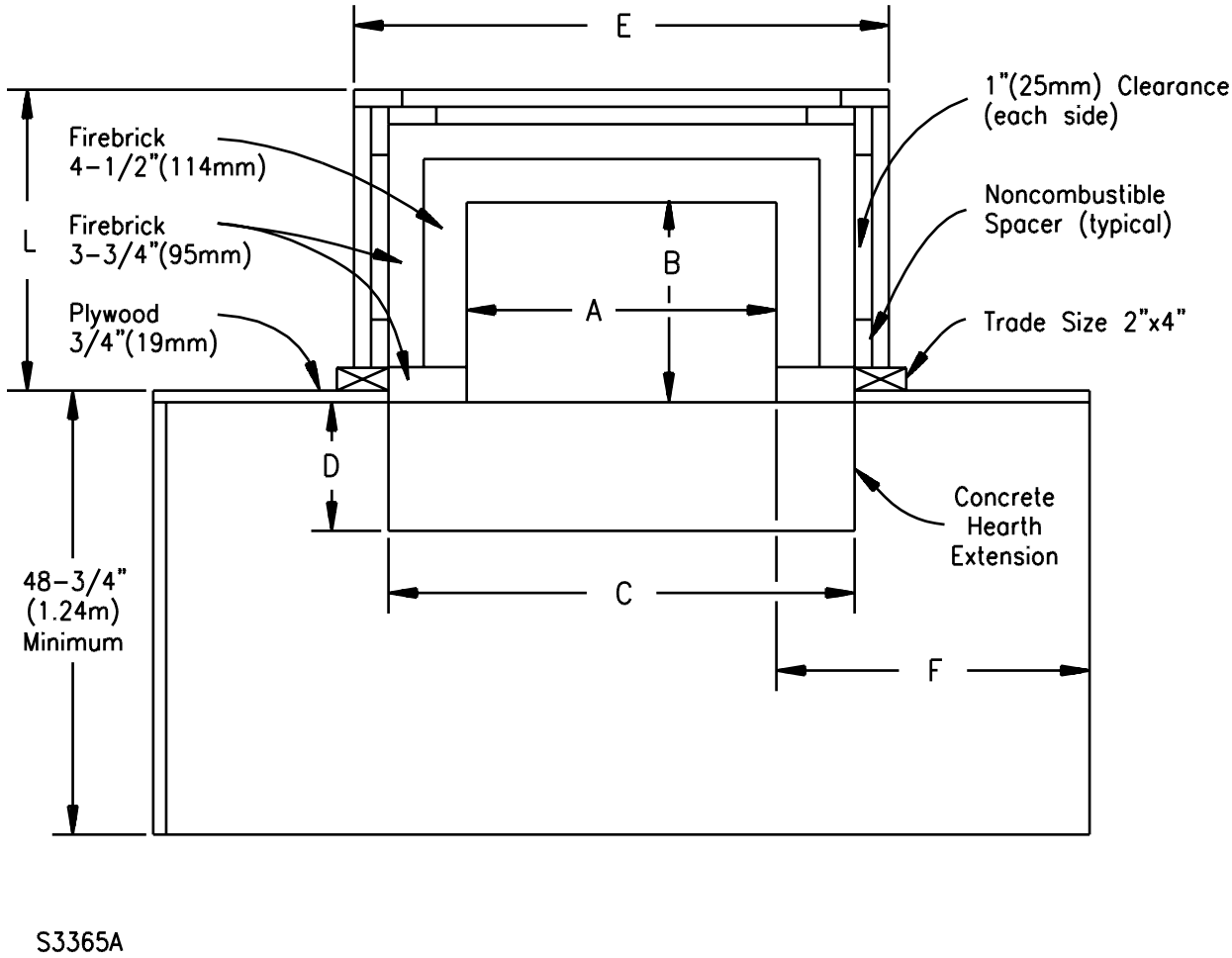

Metric conversions, lumber		
Trade size,	Nominal size	
	Inches	mm
2 x 4	1-1/2 x 3-1/2	38 x 89

UL COPYRIGHTED MATERIAL –
NOT AUTHORIZED FOR FURTHER REPRODUCTION OR
DISTRIBUTION WITHOUT PERMISSION FROM UL

Documents
Document Sharing Hub

Copyright UL
Provided by IHS under license with UL
No reproduction or networking permitted without license from IHS
Full document details: UL 907 2010

Licensee=North Carolina State Univ/5618801100
Not for Resale, 07/06/2013 20:13:51 MDT

Table 10.1
Test fireplace and enclosure dimensions[a]

Item	36-inch (914-mm) wide fireplace		48-inch (1.2-m) wide fireplace	
	Inches	(m)	Inches	(m)
A	36	(0.91)	48	(1.22)
B	24	(0.61)	24	(0.61)
C	52	(1.32)	72	(1.82)
D	16	(0.41)	20	(0.51)
E	55-1/2	(1.41)	68	(1.73)
F	36	(0.91)	36	(0.91)
G	28	(0.71)	28	(0.71)
H	11-1/2	(0.30)	16-3/4	(0.42)
I	11-1/2	(0.30)	11-1/2	(0.30)
J	3/4	(0.02)	1	(0.02)
K	7-1/4	(0.18)	8-1/2	(0.21)
L	32-3/4	(0.84)	32-3/4	(0.84)
M	22-1/2	(0.57)	27-1/2	(0.70)
N	20	(0.51)	24	(0.61)
O	12	(0.30)	16	(0.41)
P	12	(0.30)	12	(0.30)
Q	20	(0.51)	20	(0.51)

[a] As appropriate for maximum size fireplace in which the accessory is to be used. All dimensions ±1/2 inch (12.7 mm).

10.4 The test structure is to be erected within a room having ventilation capable of maintaining the buildup of carbon monoxide to less than 50 parts per million (ppm) throughout the period of any test. The room is to be free of drafts and the chimney is to exhaust into the same space, or into a space freely communicating with the space, from which the combustion air is taken. During any one test the room temperature is not to increase more than 20°F (11°C) above the value recorded at the beginning of the test.

10.5 Ventilating air, combustion air, or cooling air openings into the fireplace accessory are to be sealed unless the openings are located in the same zone or space as the fireplace accessory and are so arranged that closure is unlikely.

10.6 That part of the test structure representing the living-space area in which the fireplace accessory is to be installed is to consist of a back wall, one side wall, a ceiling, and a floor. See Figures 10.1 and 10.2. The fireplace enclosure is to be constructed as specified in Figures 10.1 – 10.4.

10.7 The combustible floor in front of and adjacent to the fireplace hearth extension is to consist of two layers of 3/4-inch (19.1-mm) thick plywood over 1-1/4-inch (31.7-mm) high floor supports placed on 16 inch (406 mm) centers so that the floor is level with the hearth extension.

10.8 The side, back walls, and ceiling are each to consist of one thickness of 3/4-inch (19.1-mm) thick plywood as shown in Figures 10.3 and 10.4. The back wall is to be even with the front of the masonry fireplace and is to include trim and a mantel located in accordance with the minimum clearances recommended by the manufacturer's installation instructions.

UL COPYRIGHTED MATERIAL –
NOT AUTHORIZED FOR FURTHER REPRODUCTION OR
DISTRIBUTION WITHOUT PERMISSION FROM UL

Documents
Document Sharing Hub

Copyright UL
Provided by IHS under license with UL
No reproduction or networking permitted without license from IHS
Full document details: UL 907 2010

Licensee=North Carolina State Univ/5618801100
Not for Resale, 07/06/2013 20:13:51 MDT

10.9 The floor is to extend at least 4 feet (1.2 m) in front of the fireplace accessory front. The side wall is to be placed perpendicular to and extend at least 4 feet (1.2 m) from the front plane of the fireplace accessory. The ceiling is to extend at least 4 feet (1.2 m) in front of the fireplace accessory. The floor and back wall are to join the side wall.

10.10 A fireplace accessory is to be installed at the minimum clearance specified by the manufacturer's installation instructions. Legs or other support members (if provided) are to be adjusted to place the fireplace accessory at the distance above the floor (hearth) which produces the highest temperatures on combustible materials.

10.11 The masonry fireplace is to include a hearth extension of noncombustible material as specified in the Standard for Chimneys, Fireplaces, Vents and Solid Fuel Burning Appliances, NFPA 211. NFPA 211 requires that the minimum hearth extension size extend 16 inches (406 mm) in front of and at least 8 inches (203 mm) beyond each side of the fireplace opening.

10.12 The temperature of the room and the entire test structure within the room is to be between 60 and 90°F (15.6 and 32.2°C) at the beginning of the tests.

10.13 All wall surfaces, the floor surface, the ceiling surface, and the inside surface of the plywood enclosure facing the fireplace are to be painted flat black.

10.14 All joints and openings between spacers or supports and the test enclosure, all joints in a test enclosure, and all joints intended to be sealed for field installation are to be sealed. The test enclosure joints are to be sealed with plastic-coated or film-faced pressure-sensitive tape lapping the joint by a minimum of 1 inch (25.4 mm) on each side. The peel adhesion characteristics of the tape on fibrous (wood) combustible enclosure materials is to comply with the Standard for Adhesion of Pressure-Sensitive Tape to Fiberboard at 90 Degree Angle and Constant Stress, ASTM D2860, at elevated temperatures of 150°F (66°C).

11 Temperature Measurement

11.1 The inlet flue-gas temperature to the chimney section is to be measured during all tests of fireplace accessories by three thermocouples, each as illustrated by Figure 11.1, inserted up to the center line of the intersection of the chimney and fireplace. The three thermocouples are to be electrically connected so as to average the flue gas temperature. Each thermocouple is to be a Type K (chromel-alumel), and is to be of a size no smaller than 24 AWG (0.21 mm^2) and no larger than 18 AWG (0.82 mm^2) having an untwisted welded bare lead junction of maximum size not over 0.050 inch (1.27 mm).

UL COPYRIGHTED MATERIAL –
NOT AUTHORIZED FOR FURTHER REPRODUCTION OR
DISTRIBUTION WITHOUT PERMISSION FROM UL

Documents
Document Sharing Hub

Copyright UL
Provided by IHS under license with UL
No reproduction or networking permitted without license from IHS
Full document details: UL 907 2010

Licensee=North Carolina State Univ/5618801100
Not for Resale, 07/06/2013 20:13:51 MDT

Figure 11.1
Thermocouple location for flue gas temperature measurement

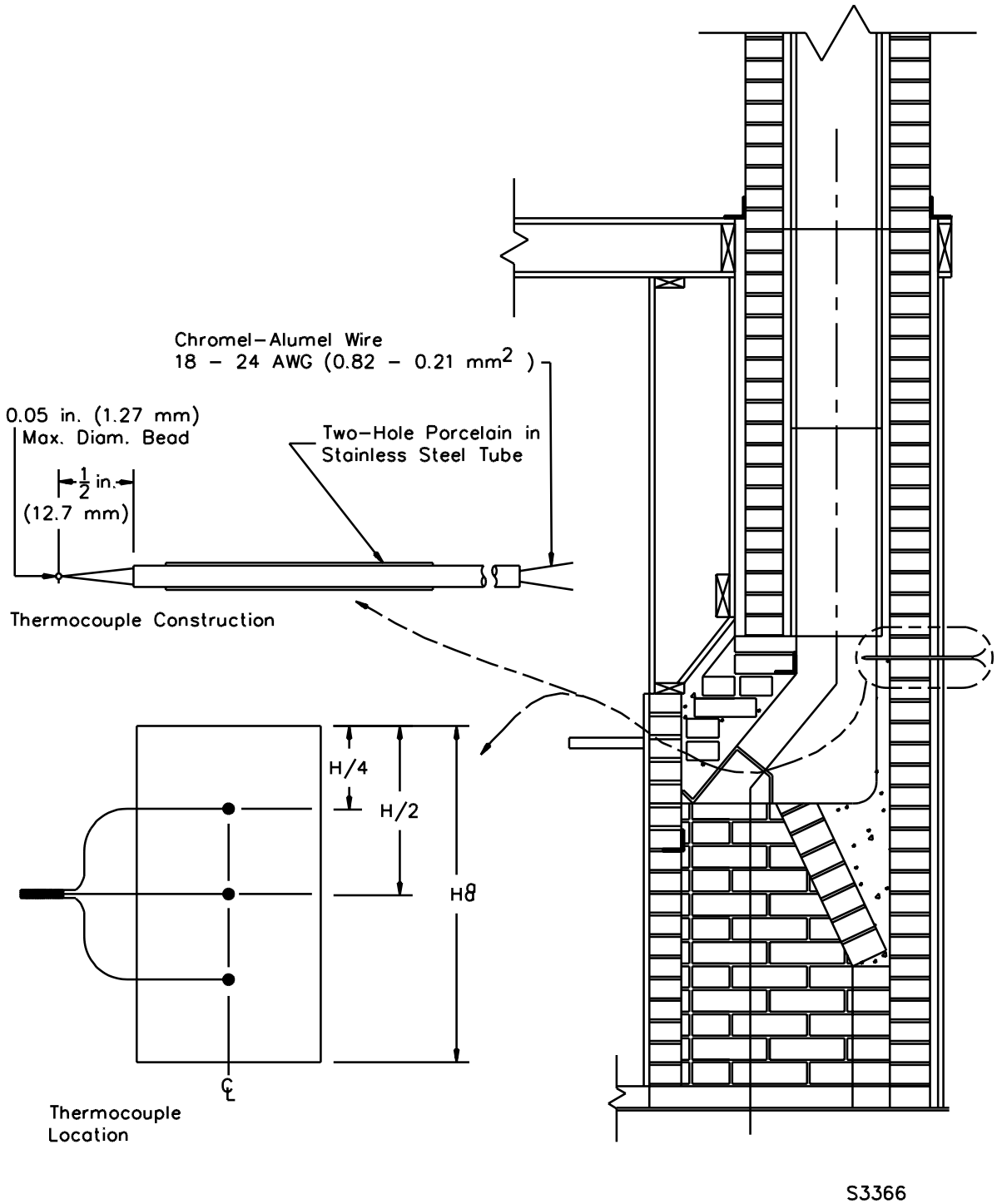

[a] See Table 10.1 for dimensions

UL COPYRIGHTED MATERIAL –
NOT AUTHORIZED FOR FURTHER REPRODUCTION OR
DISTRIBUTION WITHOUT PERMISSION FROM UL
Documents
Document Sharing Hub
Copyright UL
Provided by IHS under license with UL
No reproduction or networking permitted without license from IHS
Full document details: UL 907 2010
Licensee=North Carolina State Univ/5618801100
Not for Resale, 07/06/2013 20:13:51 MDT

11.2 Temperatures of other than flue gases and metal surfaces are to be measured using either Type K (chromel-alumel) or Type J (iron-constantan) thermocouples of wire not larger than 24 AWG (0.21 mm^2).

11.3 Temperatures of metal surfaces other than handles and electrical components are to be measured using either Type J (iron-constantan) or Type K (chromel-alumel) thermocouples of 18 to 24 AWG (0.82 to 0.21 mm^2) wire.

11.4 The thermocouple wire insulation is to have a temperature use rating higher than the temperatures to which it may be subjected during these tests.

11.5 The ambient temperature is to be determined by using a shielded thermocouple located centrally within a vertically oriented 6 inch (152 mm) length of aluminum-painted 2 inch trade size steel pipe (ANSI B36.10M), open at both ends.

11.6 The ambient temperature for the test enclosure (Figure 10.1) is to be determined by means of a shielded thermocouple located 6 inches (152 mm) away from the side wall, 4 feet (1.2 m) above the floor, and 3 feet (0.9 m) from the front of the unit at the fuel loading location.

11.7 The measurements of temperature rises on the fireplace accessory and on the test structure are to be referenced to the recorded ambient temperatures as determined by 11.6.

11.8 Thermocouples are to be attached to metal surfaces by screws, rivets, or by silver soldering or brazing or welding of the tip to the metal surface as illustrated by Figure 11.2.

UL COPYRIGHTED MATERIAL –
NOT AUTHORIZED FOR FURTHER REPRODUCTION OR
DISTRIBUTION WITHOUT PERMISSION FROM UL

Documents
Document Sharing Hub

Copyright UL
Provided by IHS under license with UL
No reproduction or networking permitted without license from IHS
Full document details: UL 907 2010

Licensee=North Carolina State Univ/5618801100
Not for Resale, 07/06/2013 20:13:51 MDT

Figure 11.2
Thermocouple installation methods

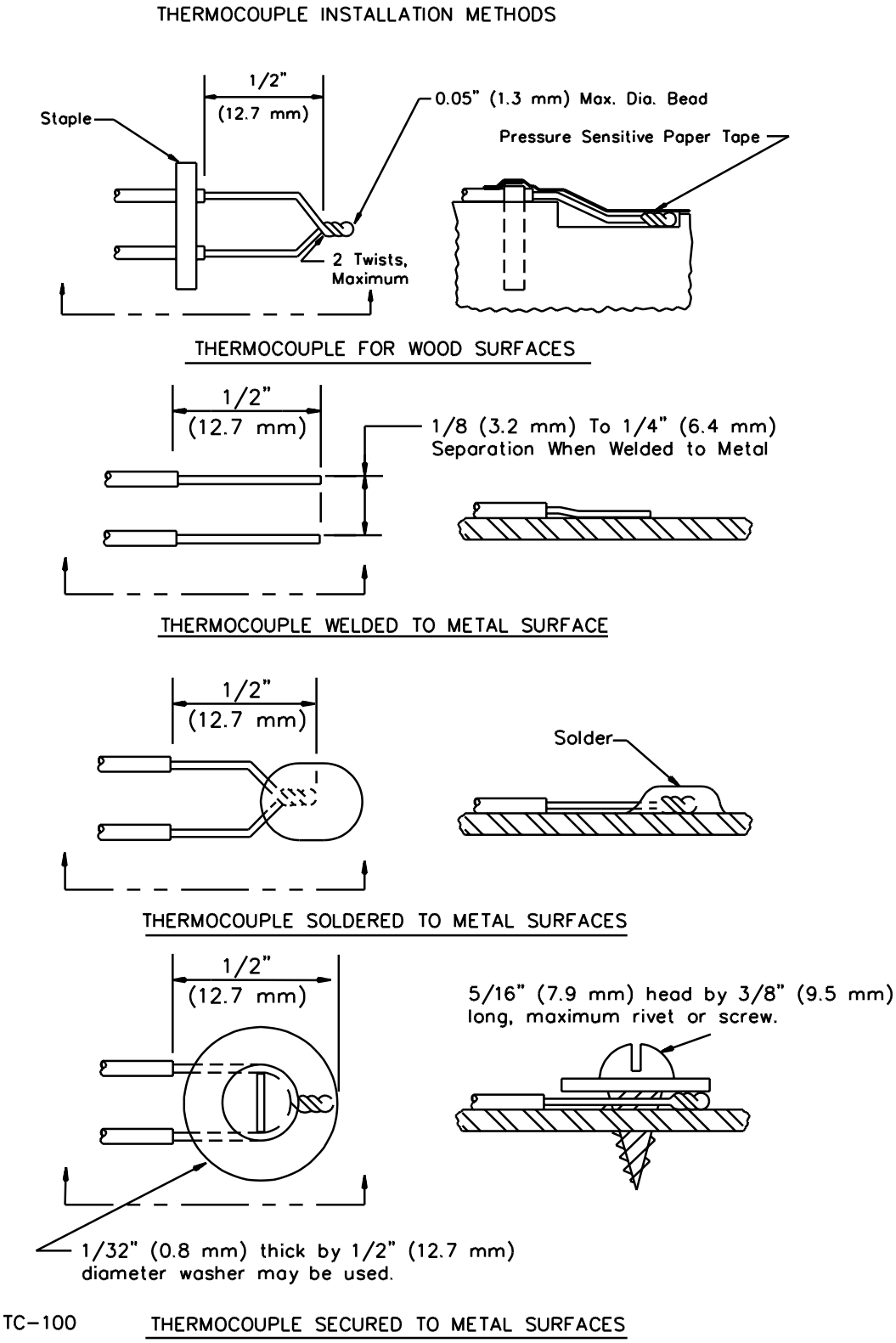

UL COPYRIGHTED MATERIAL –
NOT AUTHORIZED FOR FURTHER REPRODUCTION OR
DISTRIBUTION WITHOUT PERMISSION FROM UL

Documents
Document Sharing Hub

Copyright UL
Provided by IHS under license with UL
No reproduction or networking permitted without license from IHS
Full document details: UL 907 2010

Licensee=North Carolina State Univ/5618801100
Not for Resale, 07/06/2013 20:13:51 MDT

11.9 Thermocouples are to be secured to wood surfaces by staples placed over the insulated portion of the wires. The thermocouple tip is to be depressed into the wood so as to be flush with the wood surface at the point of measurement and held in thermal contact with the surface at that point by pressure-sensitive paper tape.

11.10 Thermocouples are to be attached to cement-like material surfaces by having the 1/2 inch (12.7 mm) tip and at least 1 inch (25.4 mm) of the lead wires embedded into the material so as to be flush with the surface of the material. Furnace cement is to be smoothed over such indentations to maintain thermal contact.

11.11 Thermocouples are to be attached to surfaces and electrical components in ways other than as described in 11.8 – 11.10 by being cemented or taped to the surface in a manner that maintains thermal contact with the surface. Materials or parts whose temperatures are to be measured are included in Table 13.1. Temperatures of electrical conductors are to be measured on the surfaces of the conductor insulation. See Figure 11.2.

11.12 The wiring methods for thermocouple circuitry, including junctions, terminals, switches, plugs, and jacks, are to be designed and constructed to provide for independent continuous routing of both thermocouple leads to the recording equipment.

11.13 Thermocouples are to be placed on surfaces of the test enclosure at various locations as may be required to measure maximum temperatures during tests. Typical thermocouple locations are shown in Figures 11.3 – 11.5.

Figure 11.3
Thermocouple locations, trim

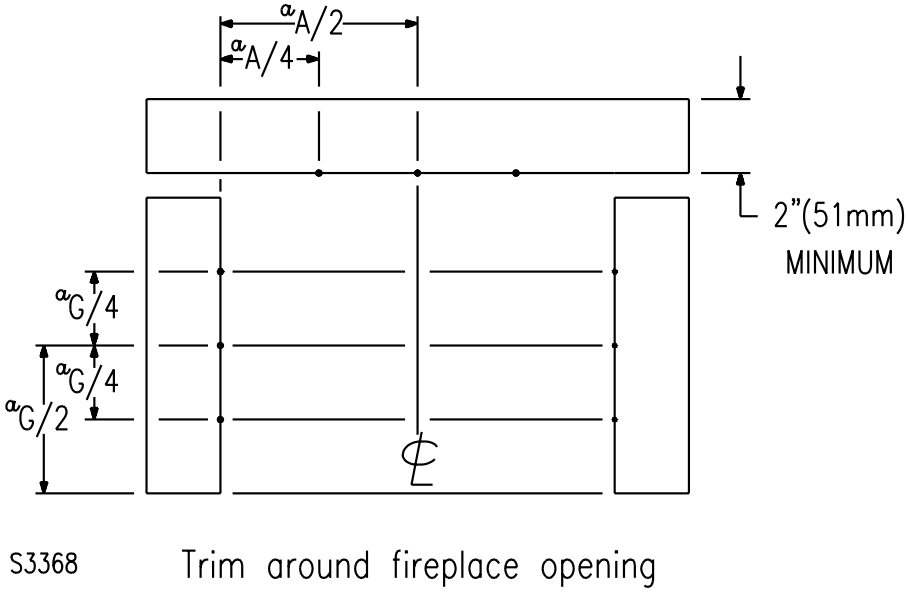

a See Table 10.1 for values of A and G.

UL COPYRIGHTED MATERIAL –
NOT AUTHORIZED FOR FURTHER REPRODUCTION OR
DISTRIBUTION WITHOUT PERMISSION FROM UL
Documents
Document Sharing Hub

Copyright UL
Provided by IHS under license with UL
No reproduction or networking permitted without license from IHS
Full document details: UL 907 2010
Licensee=North Carolina State Univ/5618801100
Not for Resale, 07/06/2013 20:13:51 MDT

Figure 11.4
Thermocouple locations, left adjustable side wall

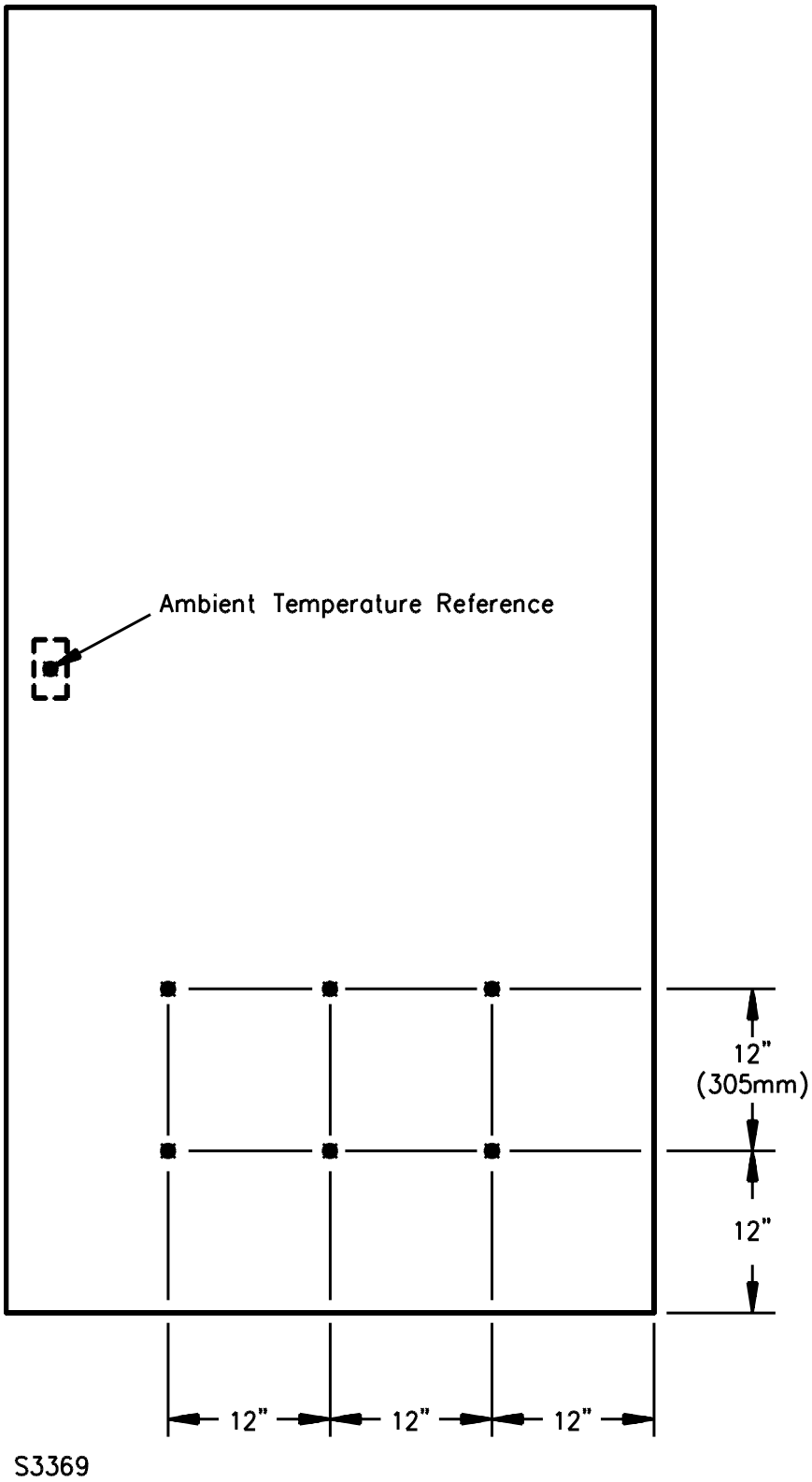

UL COPYRIGHTED MATERIAL –
NOT AUTHORIZED FOR FURTHER REPRODUCTION OR
DISTRIBUTION WITHOUT PERMISSION FROM UL

Documents
Document Sharing Hub

Copyright UL
Provided by IHS under license with UL
No reproduction or networking permitted without license from IHS
Full document details: UL 907 2010

Licensee=North Carolina State Univ/5618801100
Not for Resale, 07/06/2013 20:13:51 MDT

Figure 11.5
Thermocouple locations, mantel

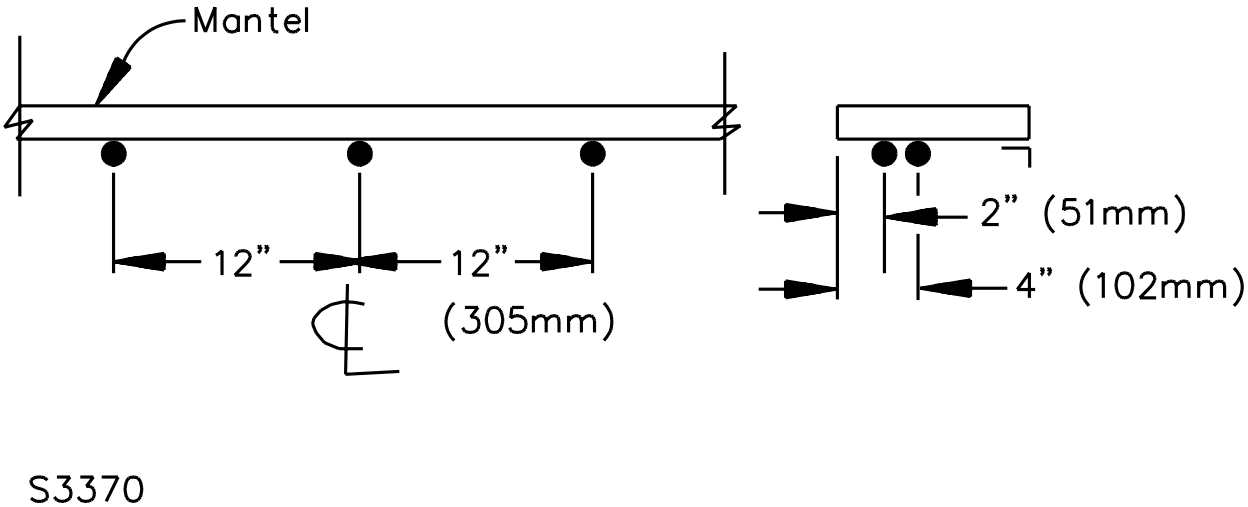

11.14 If test enclosure elements are in contact with the fireplace accessory, thermocouples are to be placed on the fireplace accessory surfaces at representative points of contact.

Exception: If a point or line contact of a spacer with an enclosure is not greater than 1/8 inch (3.2 mm) diameter or width, thermocouples are to be placed on the test enclosure at points 1/2 inch (12.7 mm) from the center line of the point or line contact.

11.15 Thermocouples are to be attached to the fireplace accessory assembly at various locations as may be required to measure maximum temperatures during the tests. Typical locations include the following (as applicable for the type of accessory being tested):

a) Sides, top, bottom, and back of that part of the product in the fire chamber.

b) Doors.

c) Handles and knobs (door opening, blower assembly control).

d) Blower assembly components (motor case and windings, switch case, leads, internal wiring and metal parts in contact with wiring, power supply cord, and other electrical components).

UL COPYRIGHTED MATERIAL –
NOT AUTHORIZED FOR FURTHER REPRODUCTION OR
DISTRIBUTION WITHOUT PERMISSION FROM UL

Documents
Document Sharing Hub

Copyright UL
Provided by IHS under license with UL
No reproduction or networking permitted without license from IHS
Full document details: UL 907 2010

Licensee=North Carolina State Univ/5618801100
Not for Resale, 07/06/2013 20:13:51 MDT