UL 916

STANDARD FOR SAFETY

Energy Management Equipment

Documents
Document Sharing Hub

Full document details: UL 916 2021

Documents
Document Sharing Hub

Full document details: UL 916 2021

UL Standard for Safety for Energy Management Equipment, UL 916

Fifth Edition, Dated October 22, 2015

Summary of Topics:

This revision of UL 916 dated October 21, 2021 includes changes in requirements in Supplement SA to address energy management equipment that use remote or cloud-based interface for communication and to clarify functional safety requirements referencing UL 60730-1; SA1, SA1.4, SA1.5, SA2.1, SA2.2, SA2.4, SA2.6 – SA2.9, SA3.1 – SA3.6, Section SA4 and SA5.6.

Text that has been changed in any manner or impacted by UL's electronic publishing system is marked with a vertical line in the margin.

The new and revised requirements are substantially in accordance with Proposal(s) on this subject dated August 27, 2021.

All rights reserved. No part of this publication may be reproduced, stored in a retrieval system, or transmitted in any form by any means, electronic, mechanical photocopying, recording, or otherwise without prior permission of UL.

UL provides this Standard "as is" without warranty of any kind, either expressed or implied, including but not limited to, the implied warranties of merchantability or fitness for any purpose.

In no event will UL be liable for any special, incidental, consequential, indirect or similar damages, including loss of profits, lost savings, loss of data, or any other damages arising out of the use of or the inability to use this Standard, even if UL or an authorized UL representative has been advised of the possibility of such damage. In no event shall UL's liability for any damage ever exceed the price paid for this Standard, regardless of the form of the claim.

Users of the electronic versions of UL's Standards for Safety agree to defend, indemnify, and hold UL harmless from and against any loss, expense, liability, damage, claim, or judgment (including reasonable attorney's fees) resulting from any error or deviation introduced while purchaser is storing an electronic Standard on the purchaser's computer system.

Documents
Document Sharing Hub

Full document details: UL 916 2021

No Text on This Page

Documents
Document Sharing Hub

Full document details: UL 916 2021

OCTOBER 22, 2015
(Title Page Reprinted: October 21, 2021)

UL 916

Standard for Energy Management Equipment

First Edition – August, 1984
Second Edition – April, 1994
Third Edition – December, 1998
Fourth Edition – December, 2007

Fifth Edition

October 22, 2015

This UL Standard for Safety consists of the Fifth Edition including revisions through October 21, 2021.

Comments or proposals for revisions on any part of the Standard may be submitted to UL at any time. Proposals should be submitted via a Proposal Request in UL's On-Line Collaborative Standards Development System (CSDS) at https://csds.ul.com.

UL's Standards for Safety are copyrighted by UL. Neither a printed nor electronic copy of a Standard should be altered in any way. All of UL's Standards and all copyrights, ownerships, and rights regarding those Standards shall remain the sole and exclusive property of UL.

COPYRIGHT © 2021 UNDERWRITERS LABORATORIES INC.

Documents
Document Sharing Hub

Full document details: UL 916 2021

No Text on This Page

Documents
Document Sharing Hub

Full document details: UL 916 2021

CONTENTS

INTRODUCTION

1 Scope 7
2 Components 7
3 Units of Measurement 7
4 Undated References 8
5 Glossary 8

CONSTRUCTION

6 General 10
7 Frame and Enclosure 10
7.1 General 10
7.2 Covers 11
7.3 Transformers 13
7.4 Cast metal 13
7.5 Sheet metal 13
7.6 Nonmetallic 16
7.7 Windows 17
7.8 Raintight and rainproof enclosures 17
8 Openings in Enclosures 18
8.1 Ventilating openings 18
8.2 Other openings 19
8.3 Screens and expanded metal 21
8.4 Wire openings 22
9 Mounting 24
10 Mechanical Assembly 24
11 Operating Mechanism 24
12 Accessibility of Uninsulated Live Parts, Film-Coated Wire, and Moving Parts 25
13 Protection Against Corrosion 31
14 Insulating Materials 33
15 Field Connections 34
15.1 General 34
15.2 Equipment permanently connected electrically 34
15.3 Terminals 36
15.4 Outlet-box-mounted devices 37
15.5 Portable equipment 38
15.6 Stationary equipment 38
15.7 Polarity 38
15.8 Strain relief 38
15.9 Bushings 39
16 Current-Carrying Parts 39
17 Switches 40
18 Internal Wiring 40
18.1 General 40
18.2 Interconnecting cords and cables 43
18.3 Interconnection of units 43
19 Grounding 44
19.1 General 44
19.2 Grounding means 44
19.3 Terminals and leads 45
20 Bonding of Internal Parts 46
20.1 General 46

AVA Documents
Document Sharing Hub
Full document details: UL 916 2021

20.2 Construction and connection 47
21 Motors 49
22 Printed Wiring Boards 50
23 Transformers 50
24 Capacitors 50
24.1 General 50
24.2 Signal coupling capacitors 50
25 Fuseholders 51
26 Overcurrent Protection, Control-Circuit Conductors 51
27 Overload Relays, Thermal Protectors for Motors, and Impedance-Protected Motors 52
28 Coil Windings 52
29 Spacings 53
29.1 General 53
29.2 Line-voltage circuits 54
29.3 Magnet-coil windings 56
29.4 Low-voltage class 2 circuits 56
29.5 Isolated limited secondary circuits (100-volt-amperes or less) 57
29.6 Controlled environment circuits 57
30 Clearances and Creepage Distances 59
31 Controlled-Environment Secondary Circuits 61
32 Wiring Space 62
33 Separation of Circuits 63
34 Isolation Devices 65
35 Connections to Separate Equipment 66
35.1 General 66
35.2 Fuel-control circuit 66
35.3 Circulator or auxiliary-control circuit 67
36 Interconnection of Class 2 Circuits 67
37 Barriers 67

PROTECTION AGAINST INJURY TO PERSONS

38 General 68
38.1 Scope 68
38.2 Sharp corners and edges 68
38.3 Moving parts 68
38.4 Enclosures and guards 68
38.5 Surface temperatures 69
38.6 Mounting devices 69
38.7 Strength of parts 69
39 Protection of Users and Service Personnel 70
39.1 General 70
39.2 Mechanical servicing 72
39.3 Electrical servicing 72

PERFORMANCE

40 General 73
41 Power Input Test 74
42 Temperature Test 74
43 Overvoltage and Undervoltage Tests 79
44 Leakage Current Test 79
45 Leakage Current Test Following Humidity Conditioning 82
46 Normal Operation Test 82
47 Abnormal Operation Test 82
47.1 General 82

Documents
Document Sharing Hub
Full document details: UL 916 2021

47.2 Rectifier – capacitor combinations ... 83
47.3 Feedback sensing devices ... 83
47.4 Isolation devices ... 83
47.5 Abnormal switching test ... 84
48 Component Breakdown Test ... 84
48.1 Effects on equipment ... 84
48.2 Effects on controlled load ... 85
49 Overload Test ... 85
49.1 General ... 85
49.2 Tungsten-filament-lamp load characteristics ... 90
50 Endurance Test ... 91
51 Electronic Ballast, CFLs and LED Driver Rated Controls ... 93
52 Dielectric Voltage-Withstand Test ... 96
52.1 General ... 96
52.2 Secondary circuits (controlled environment) ... 98
52.3 Power transformers ... 98
52.4 Induced potential (crossover lead) ... 98
52.5 Induced potential repeated ... 99
52.6 Dead-case-mounted semiconductors ... 99
53 Volt-Ampere Capacity ... 99
54 Burnout Test ... 100
55 Limited Short-Circuit Test ... 100
55.1 General ... 100
55.2 Test circuit ... 101
56 Conductor Short-Circuit Test ... 102
57 Strain Relief and Flexing Test ... 102
57.1 Strain relief ... 102
57.2 Flexing ... 103
58 Accelerated Aging Tests ... 103
58.1 General ... 103
58.2 Gaskets ... 103
58.3 Sealing compound ... 104
58.4 Adhesives ... 104
59 Metallic Coating Thickness Test ... 105
60 Rain Test ... 106
61 Conduit Entries Strength Test ... 110
61.1 Polymeric enclosures ... 110
61.2 Metallic enclosures ... 111
62 Cover Retention Test ... 111
63 Bonding Conductor Tests ... 111
63.1 Overload withstand test ... 111
63.2 Resistance test ... 112
64 Glass Window Impact Test ... 112
65 Permanence of Marking ... 112
66 Component Evaluation ... 114
67 Isolating Resistor Evaluation ... 114

MANUFACTURING AND PRODUCTION TESTS

68 Electronic Controls Requiring a Critical Component Evaluation ... 114
69 Production-Line Dielectric Voltage-Withstand Test ... 114
69.1 General ... 114
69.2 Dead-case-mounted semiconductors ... 116
70 Production-Line Grounding-Continuity Test ... 116

Documents
Document Sharing Hub
Full document details: UL 916 2021

RATINGS

71 Details 116

MARKINGS

72 General 117
73 Wiring 120
74 Elevated Air Temperature 123
75 Cautionary Markings 123
76 Instructions 124

ACCESSORY EQUIPMENT

77 General 125
78 Construction 125
79 Performance 125
80 Markings 126

POLYMERIC MATERIALS

81 General 126
82 Flammability of Enclosure – 5-Inch Flame 127
83 Thermal Aging 130
84 Exposure to Ultraviolet Light Test 130
85 Water Exposure and Immersion Test 131
86 Volume Resistivity Test 131
87 Resistance to Hot-Wire Ignition Test 132
88 Heat-Deflection Temperature Test 132
89 Resistance to Impact Test 132
90 Resistance to Crushing Test 133
91 Mold-Stress Evaluation 133
92 Dielectric Strength Test 134
93 Knockout Test 134
94 Abnormal Operation Test 134
95 Resistance to Ignition Test 134
96 Creep and Overcurrent Test 134

SUPPLEMENT SA – SAFETY OF SMART ENABLED ENERGY MANAGEMENT EQUIPMENT

SA1 Scope 135
SA2 General 135
SA3 Functional Safety 136
SA4 Resistance to Electro Magnetic Phenomena (Immunity) 137
SA5 Markings and Instructions 137

APPENDIX A

Standards for Components 138

Documents
Document Sharing Hub

Full document details: UL 916 2021

INTRODUCTION

1 Scope

1.1 These requirements cover energy management equipment and associated sensing devices rated 600 volts or less and intended for installation in accordance with the National Electrical Code, NFPA 70.

1.2 This equipment energizes or de-energizes electrical loads to achieve a desired use of electrical power. The equipment is intended to control electrical loads by responding to sensors or transducers monitoring power consumption, by sequencing, by cycling the loads through the use of preprogrammed data logic circuits, or any combination thereof. Devices responding to signals from a utility company may receive the signals over the power lines or as radio signals.

1.3 These requirements also cover equipment intended for connection only to a low-voltage circuit of limited power supplied by a Class 2 transformer.

1.4 These requirements do not cover switching devices operated by a mechanical or electromechanical clock mechanism to energize or de-energize loads. These requirements do cover electronic clock operated energy management equipment.

1.5 Controls intended to be installed in air handling spaces or in other environmental air space (plenums) are covered under the scope of this standard.

2 Components

2.1 Except as indicated in 2.2, a component of a product covered by this standard shall comply with the requirements for that component. See Appendix A for a list of standards covering components used in the products covered by this standard.

2.2 A component is not required to comply with a specific requirement that:

a) Involves a feature or characteristic not required in the application of the component in the product covered by this standard, or

b) Is superseded by a requirement in this standard.

2.3 A component shall be used in accordance with its rating established for the intended conditions of use.

2.4 Specific components are incomplete in construction features or restricted in performance capabilities. Such components are intended for use only under limited conditions, such as certain temperatures not exceeding specified limits, and shall be used only under those specific conditions.

3 Units of Measurement

3.1 When a value for measurement is followed by a value in other units in parentheses, the first stated value is the requirement.

3.2 Unless otherwise indicated, all voltage and current values mentioned in this standard are root-mean-square (rms).

Documents
Document Sharing Hub
Full document details: UL 916 2021

4 Undated References

4.1 Any undated reference to a code or standard appearing in the requirements of this standard shall be interpreted as referring to the latest edition of that code or standard.

5 Glossary

5.1 For the purpose of this standard the following definitions apply.

5.2 CLASS 2 SYSTEM – A circuit, transformer, or power source having energy- and voltage-limiting characteristics as described in the National Electrical Code, ANSI/NFPA 70.

5.3 CONTROLLED ENVIRONMENT – An environment relatively free of contaminants. A controlled environment may also be provided by means of a totally closed, gasketed enclosure or the equivalent.

5.4 DEAD-CASE-MOUNTED SEMICONDUCTOR – A semiconductor, such as a triac or silicon-controlled rectifier, employing an integral metal tab or stud that is insulated from live parts.

5.5 FIELD-WIRING TERMINAL – A wiring terminal on permanently-connected equipment to which supply connections are made when the equipment is installed in the field.

5.6 ISOLATED LIMITED-ENERGY LOW-VOLTAGE CIRCUIT – A circuit (also hereafter referred to as a low-voltage circuit) involving a potential of not more than 42.4 volts peak supplied by one of the following:

a) An energy-limiting Class 2 transformer;

b) A non-energy-limiting Class 2 transformer and an overcurrent protective device. The protective device is:

1) Not to be of the automatic reclosing type;

2) To be trip-free from the reclosing mechanism; and

3) Not to be readily interchangeable with a device of a different rating;

c) A combination of an isolated transformer secondary winding and a fixed impedance that complies with all the performance requirements for an energy-limiting Class 2 transformer or power source;

d) A dry-cell battery having output characteristics not greater than those of an energy-limiting Class 2 transformer or power source; or

e) A combination of a rechargeable battery and a fixed impedance that complies with all of the performance requirements for an energy-limiting Class 2 transformer or power source.

5.7 ISOLATED LIMITED-ENERGY SECONDARY CIRCUIT – A circuit derived from an isolated secondary winding of a transformer having a maximum capacity of 100 volt-amperes and an open-circuit secondary-voltage rating not exceeding 1000 volts.

5.8 ISOLATION – Electrical separation between two locations.

5.9 JUNCTION TEMPERATURE – A theoretical temperature based on a simplified representation of the thermal and electrical behavior of a semiconductor device.

Documents
Document Sharing Hub
Full document details: UL 916 2021

5.10 MAXIMUM CASE TEMPERATURE – A specification, usually in the form of a curve of on-state current versus maximum case temperature, that refers to the maximum case temperature of a thyristor with regard to the on-state current. The case is an external point on the thyristor where this temperature is related to the maximum junction temperature for the thyristor.

5.11 NONISOLATED LIMITED-ENERGY LOW-VOLTAGE CIRCUIT (POWER SOURCE) – A circuit derived from a source of supply classified as line-voltage by connecting impedance in series with the supply circuit as a means of limiting the voltage and power to comply with Class 2 characteristics.

5.12 OPPOSITE POLARITY – A difference of potential between two points, where shorting of these two points would result in a condition involving overload, rupturing of printed wiring board tracks, components or fuses, and the like.

5.13 OPTICAL ISOLATOR – A photon-coupled device consisting of a light source and sensor integrated into a single package that provides circuit isolation.

5.14 PILOT DUTY RATING – A rating applied to electromagnetic loads.

5.15 PORTABLE EQUIPMENT – Cord- and plug-connected equipment that is capable of being carried or moved about.

5.16 PRIMARY CIRCUIT – The wiring and components that are conductively connected to the supply circuit.

5.17 PULSE TRANSFORMER – A transformer intended to pass pulse waveforms as distinguished from sine waves.

5.18 SAFETY CIRCUIT – A primary or secondary circuit that contains a control relied upon to reduce the risk of fire, electric shock, or injury to persons at the controlled equipment.

5.19 SAFETY CONTROL – An automatic control and interlock (including relays, switches, and other auxiliary equipment used to form a system) which is intended to reduce the risk of fire, electric shock, or injury to persons.

5.20 SECONDARY CIRCUIT – A circuit supplied from a secondary winding of an isolating transformer.

5.21 STATIONARY EQUIPMENT – Cord- and plug-connected equipment that is intended to be fastened in place, or located in a dedicated space.

5.22 USER SERVICING – Any form of servicing that can be performed by personnel other than those who are trained to maintain the particular equipment is considered user servicing. Some examples of user servicing are:

a) The attachment of accessories by means of attachment plugs and receptacles or by means of other separable connectors.

b) The changing of tapes and the like that do not involve complicated operations.

c) The replacement of recording tapes, disks, program boards, punched cards, or paper forms. Replacement of lamps and fuses and resetting of circuit breakers located in an operator-access area unless the lamps, fuses, or circuit breakers are marked to indicate replacement or resetting only by qualified service personnel.

d) The making of routine operating adjustments necessary to adapt the unit for its different intended functions.

AVA Documents
Document Sharing Hub
Full document details: UL 916 2021

e) Routine cleaning of data-handling media.

CONSTRUCTION

6 General

6.1 An electronic or solid-state circuit used in a back-up, limiting, or other safety control, including controls that require a calibration test, is evaluated on the basis of its compliance with the requirements in this standard. Electronic components shall comply with the requirements for the application.

6.2 A circuit extending from the equipment and intended for connection to a low-voltage Class 2 circuit as defined in the National Electrical Code, ANSI/NFPA 70, shall not involve a potential of more than 30 volts rms (42.4 volts peak) and be supplied by:

a) A primary battery;

b) A standard Class 2 transformer; or

c) A combination of a transformer and a fixed impedance that, as a unit, complies with all the performance requirements for a Class 2 transformer.

6.3 A circuit derived from a line-voltage circuit by connecting resistance in series with the supply circuit as a means of limiting the voltage and current is considered to be a low-voltage circuit when the impedance has been investigated for such use. See Isolating Resistor Evaluation, Section 67.

6.4 The equipment shall use materials that comply with the requirements for the application and shall be made and finished with the degree of uniformity and grade of workmanship practicable in a well-equipped factory.

7 Frame and Enclosure

7.1 General

7.1.1 Equipment shall be formed and assembled so that it will have the strength and rigidity necessary to resist the abuses to which it may be subjected, without increasing the risk of fire, electric shock, or injury to persons due to total or partial collapse resulting in a reduction of spacings, loosening or displacement of parts, or other serious defects.

7.1.2 Equipment that complies with the requirements in 7.1.3 – 7.8.6 is considered to comply with 7.1.1.

7.1.3 Electrical parts of the equipment, other than a supply cord or low-voltage terminals, shall be located or enclosed so that the risk of unintentional contact with uninsulated live parts will be reduced.

Exception: An enclosure is not required for equipment intended for field installation within the enclosure of another product provided that:

a) All required markings are provided as specified in Sections 72 – 75 and

b) The temperature, overvoltage and undervoltage tests are conducted with the equipment in a 40 ±2°C (104 ±3.6°F) ambient. See Barriers, Section 37, and the Overvoltage and Undervoltage Tests, Section 43.

7.1.4 Equipment incorporating an air-filtering system or utilizing a tight-fitting enclosure may be subject to an investigation to determine whether it provides the equivalent of a controlled environment.

Documents
Document Sharing Hub
Full document details: UL 916 2021

Exception: A gasketed enclosure is considered to provide an enclosed environment.

7.1.5 An air filter acting as an enclosure part shall comply with the requirements for Class 1 filters as specified in the Standard for Air Filter Units, UL 900. If abnormal tests show that an equivalent flame barrier exists, then an air filter is not considered to be an enclosure part and may be omitted.

7.2 Covers

7.2.1 An enclosure and a part of an enclosure such as a door or cover shall be provided with means for firmly securing it in place.

7.2.2 Sheet-metal screws threading directly into metal shall not be used to attach a cover, door, or other part that is removed to install field wiring or for operation of the equipment. Machine screws and self-tapping machine screws may thread directly into sheet-metal walls. See 18.1.19.

7.2.3 Sheet-metal screws mounting internal components that are not removed for installation or operation may thread directly into metal.

7.2.4 An enclosure cover shall be hinged if it gives access to a fuse or other overcurrent device, the functioning of which requires renewal, or if it is necessary to open the cover in connection with normal operation of the device.

Exception: A hinged cover is not required if the only overload-protective devices enclosed are:

a) Supplementary fuses in control circuits, provided the devices and circuit loads are within the same enclosure;

b) Supplementary overcurrent devices rated 2 amperes or less for loads not exceeding 100 volt-amperes;

c) Extractor fuses having an integral enclosure; or

d) Overcurrent devices connected in a low-voltage circuit. See 5.6.

7.2.5 A door or cover giving access to a fuse or thermal cutout in other than a low-voltage circuit shall:

a) Shut closely against a 1/4 inch (6.4 mm) rabbet or the equivalent,

b) Have turned flanges for the full length of four edges, or

c) Have angle strips fastened to it.

Flanges or angle strips shall fit closely with the outside of the walls of the box proper and shall overlap the edges of the box not less than 1/2 inch (12.7 mm). A construction determined to provide equivalent protection or a combination of flange and rabbet may be used. See Figure 7.1 and Figure 7.2.

Documents
Document Sharing Hub
Full document details: UL 916 2021

Figure 7.1

Rabbet

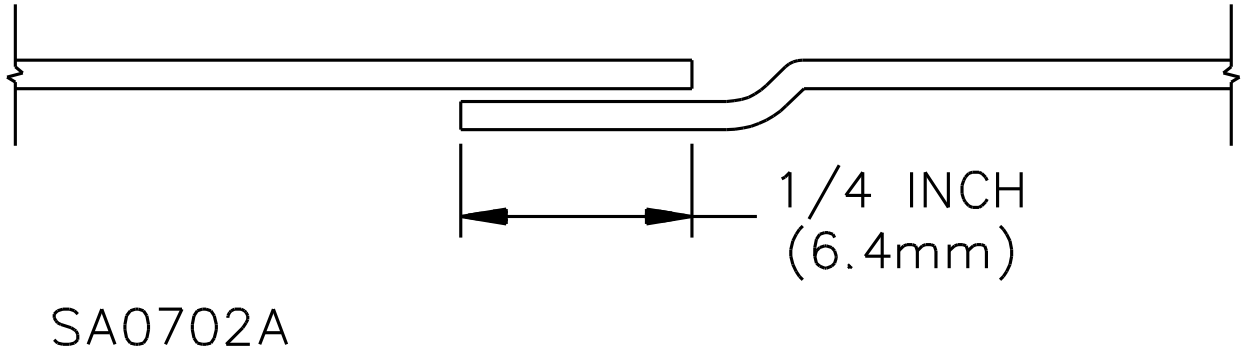

Figure 7.2

Measurement of overlap

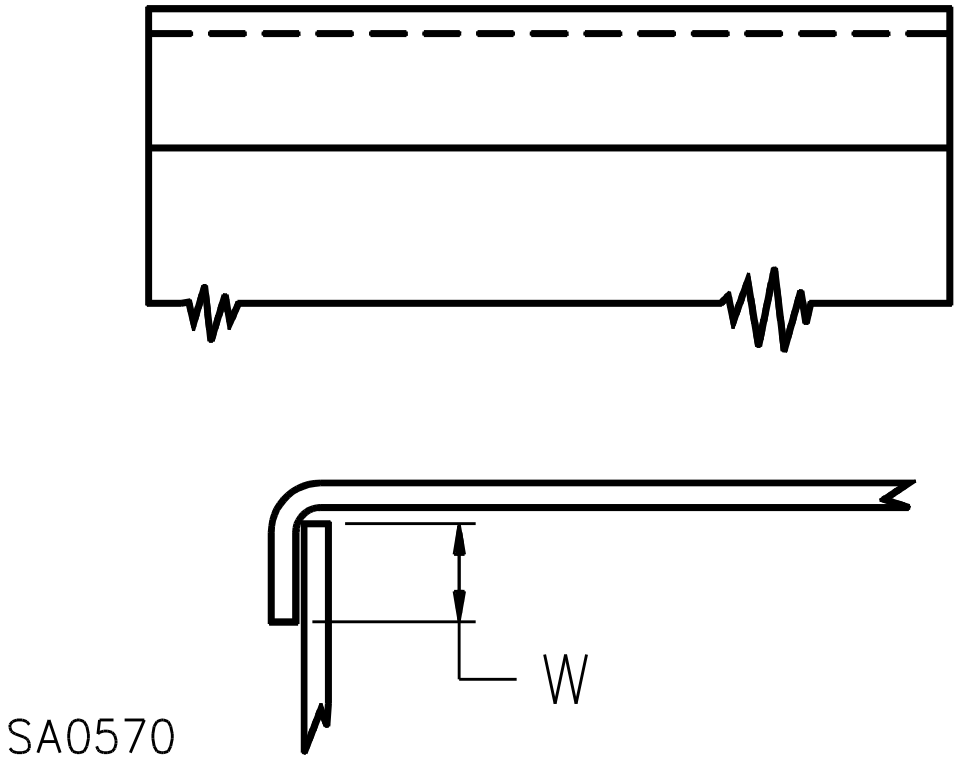

7.2.6 A strip used to provide a rabbet and an angle strip fastened to the edges of a door shall be secured at not less than two points, not more than 1-1/2 inches (38.1 mm) from each end of each strip and at points between these end fastenings not more than 6 inches (152 mm) apart.

Documents
Document Sharing Hub
Full document details: UL 916 2021

7.2.7 If a cover is required by 7.2.4 to be hinged, then the cover shall not depend solely upon screws or other similar means requiring the use of a tool to hold it closed, but shall be provided with a spring latch or catch, or a hand operable captive fastener.

7.2.8 A snap-on cover that gives access to bare live parts or film-coated wire and that does not require a tool for removal shall have no apparent means of removal, such as an extending tab, and shall withstand the Cover Retention Test, Section 62.

7.2.9 The continuity of a bonding means for a snap-on or fastener-attached cover shall comply with the requirements in Bonding of Internal Parts, Section 20.

7.3 Transformers

7.3.1 A transformer shall be housed within its own enclosure or within the main enclosure of the equipment, or within a combination of the two.

7.3.2 A sheet-steel transformer enclosure shall have a thickness of at least 0.026 inch (0.66 mm) if uncoated and at least 0.029 inch (0.74 mm) if galvanized.

Exception: Sheet steel having a thickness of at least 0.020 inch (0.51 mm) if uncoated and at least 0.023 inch (0.58 mm) if galvanized may be used for a drawn end bell having maximum dimensions of 2-1/4 inches (57.2 mm) on the flat portion and 1-1/2 inches (38.1 mm) at the base of the drawn portion.

7.3.3 A cast-metal transformer enclosure shall comply with the requirements in 7.4.1. A transformer enclosure of other material shall have the necessary strength and rigidity and otherwise comply with the requirements for the application.

7.4 Cast metal

7.4.1 A cast-metal enclosure shall be at least 1/8 inch (3.2 mm) thick at every point, more than 1/8 inch thick at reinforcing ribs and door edges, and at least 1/4 inch (6.4 mm) thick at tapped holes for conduit.

Exception: Other than at plain or threaded conduit holes, die-cast metal shall be minimum:

a) 3/32 inch (2.4 mm) thick for an area greater than 24 square inches (154.8 cm^2) or having any dimension more than 6 inches (152 mm).

b) 1/16 inch (1.6 mm) thick for an area of 24 square inches or less and having no dimension more than 6 inches. The area limitation may be obtained by the provision of reinforcing ribs subdividing a larger area.

c) 0.035 inch (0.89 mm) thick if the enclosure will not be used as a splice box and if the voltage rating of the complete device is such that the voltage between any two conductors is 250 volts or less and is limited to direct current or single-phase alternating current.

d) 0.028 inch (0.71 mm) thick if the enclosure houses only low-voltage circuits.

7.5 Sheet metal

7.5.1 Other than at points where a wiring system is to be connected, the thickness of a sheet-metal enclosure shall not be less than that specified in Table 7.1 and Table 7.2.

Documents
Document Sharing Hub
Full document details: UL 916 2021

Table 7.1
Minimum thickness of sheet metal for electrical enclosures – carbon steel or stainless steel

Without supporting frame[a]				With supporting frame or equivalent reinforcing[a]				Minimum thickness uncoated,		Minimum thickness metal coated,	
Maximum width,[b]		Maximum length,[c]		Maximum width,[b]		Maximum length,					
inches	(cm)	inches	(cm)	inches	(cm)	inches	(cm)	inch	(mm)	inch	(mm)
4.0	(10.2)	Not limited		6.25	(15.9)	Not limited					
4.75	(12.1)	5.75	(14.6)	6.75	(17.1)	8.25	(21.0)	0.020[d]	(0.51)	0.023[d]	(0.58)
6.0	(15.2)	Not limited		9.5	(24.1)	Not limited					
7.0	(17.8)	8.75	(22.2)	10.0	(25.4)	12.5	(31.8)	0.026[d]	(0.66)	0.029[d]	(0.74)
8.0	(20.3)	Not limited		12.0	(30.5)	Not limited					
9.0	(22.9)	11.5	(29.2)	13.0	(33.0)	16.0	(40.6)	0.032	(0.81)	0.034	(0.86)
12.5	(31.8)	Not limited		19.5	(49.5)	Not limited					
14.0	(35.6)	18.0	(45.7)	21.0	(53.3)	25.0	(63.5)	0.042	(1.07)	0.045	(1.14)
18.0	(45.7)	Not limited		27.0	(68.6)	Not limited					
20.0	(50.8)	25.0	(63.5)	29.0	(73.7)	36.0	(91.4)	0.053	(1.35)	0.056	(1.42)
22.0	(55.9)	Not limited		33.0	(83.8)	Not limited					
25.0	(63.5)	31.0	(78.7)	35.0	(88.9)	43.0	(109.2)	0.060	(1.52)	0.063	(1.60)
25.0	(63.5)	Not limited		39.0	(99.1)	Not limited					
29.0	(73.7)	36.0	(91.4)	41.0	(104.1)	51.0	(129.5)	0.067	(1.70)	0.070	(1.78)
33.0	(83.8)	Not limited		51.0	(129.5)	Not limited					
38.0	(96.5)	47.0	(119.4)	54.0	(137.2)	66.0	(167.6)	0.080	(2.03)	0.084	(2.13)
42.0	(106.7)	Not limited		64.0	(162.6)	Not limited					
47.0	(119.4)	59.0	(149.9)	68.0	(172.7)	84.0	(213.4)	0.093	(2.36)	0.097	(2.46)
52.0	(132.1)	Not limited		80.0	(203.2)	Not limited					
60.0	(152.4)	74.0	(188.0)	84.0	(213.4)	103.0	(261.6)	0.108	(2.74)	0.111	(2.82)
63.0	(160.0)	Not limited		97.0	(246.4)	Not limited					
73.0	(185.4)	90.0	(228.6)	103.0	(261.6)	127.0	(322.6)	0.123	(0.123)	0.126	(3.20)

[a] See 7.5.4 for description of supporting frame and method for accomplishing equivalent reinforcing.

[b] The width is the smaller dimension of a rectangular piece of sheet metal that is part of an enclosure. Adjacent surfaces of an enclosure may have common supports and be made of a single sheet.

[c] Not limited applies only if the edge of the surface is flanged at least 1/2 inch (12.7 mm) or fastened to adjacent surfaces not normally removed in use.

[d] Sheet steel for an enclosure intended for outdoor use – raintight or rainproof – shall not be less than 0.034 inch (0.86 mm) thick if zinc coated and not less 0.032 inch (0.81 mm) thick if uncoated.

Table 7.2
Minimum thickness of sheet metal for enclosures– aluminum, copper, or brass

Without supporting frame[a]				With supporting frame or equivalent reinforcing[a]				Minimum thickness,	
Maximum width,[b]		Maximum length,[c]		Maximum width,[b]		Maximum length,			
inches	(cm)	inches	(cm)	inches	(cm)	inches	(cm)	inch	(mm)
3.0	(7.6)	Not limited		7.0	(17.8)	Not limited			
3.5	(8.9)	4.0	(10.2)	8.5	(21.6)	9.5	(24.1)	0.023[d]	(0.58)

Table 7.2 Continued on Next Page

AVA Documents
Document Sharing Hub
Full document details: UL 916 2021

Table 7.2 Continued

Without supporting frame[a]				With supporting frame or equivalent reinforcing[a]				Minimum thickness,	
Maximum width,[b]		Maximum length,[c]		Maximum width,[b]		Maximum length,			
inches	(cm)	inches	(cm)	inches	(cm)	inches	(cm)	inch	(mm)
4.0	(10.2)	Not limited		10.0	(25.4)	Not limited			
5.0	(12.7)	6.0	(15.2)	10.5	(26.7)	13.5	(34.3)	0.029	(0.74)
6.0	(15.2)	Not limited		14.0	(35.6)	Not limited			
6.5	(16.5)	8.0	(20.3)	15.0	(38.1)	18.0	(45.7)	0.036	(0.91)
8.0	(20.3)	Not limited		19.0	(48.3)	Not limited			
9.5	(24.1)	11.5	(29.2)	21.0	(53.3)	25.0	(63.5)	0.045	(1.14)
12.0	(30.5)	Not limited		28.0	(71.1)	Not limited			
14.0	(35.6)	16.0	(40.6)	30.0	(76.2)	37.0	(94.0)	0.058	(1.47)
18.0	(45.7)	Not limited		42.0	(106.7)	Not limited			
20.0	(50.8)	25.0	(63.5)	45.0	(114.3)	55.0	(139.7)	0.075	(1.91)
25.0	(63.5)	Not limited		60.0	(152.4)	Not limited			
29.0	(73.7)	36.0	(91.4)	64.0	(162.6)	78.0	(198.1)	0.095	(2.41)
37.0	(94.0)	Not limited		87.0	(221.0)	Not limited			
42.0	(106.7)	53.0	(134.6)	93.0	(236.2)	114.0	(289.6)	0.122	(3.10)
52.0	(132.1)	Not limited		123.0	(312.4)	Not limited			
60.0	(152.4)	74.0	(188.0)	130.0	(330.2)	160.0	(406.4)	0.153	(3.89)

[a] See 7.5.4 for description of supporting frame and method for accomplishing equivalent reinforcing.

[b] The width is the smaller dimension of a rectangular piece of sheet metal that is part of an enclosure. Adjacent surfaces of an enclosure may have common supports and be made of a single sheet.

[c] Not limited applies only if the edge of the surface is flanged at least 1/2 inch (12.7 mm) or fastened to adjacent surfaces not normally removed in use.

[d] Sheet copper, brass, or aluminum for an enclosure intended for outdoor use – raintight or rainproof – shall not be less than 0.029 inch (0.74 mm) thick.

7.5.2 At points at which a wiring system is to be connected, uncoated steel shall be at least 0.032 inch (0.81 mm) thick, zinc-coated steel shall be at least 0.034 inch (0.86 mm) thick, and nonferrous metal shall be at least 0.045 inch (1.14 mm) thick.

7.5.3 Table 7.1 and Table 7.2 are based on a uniform deflection of the enclosure surface for any given load concentrated at the center of the surface regardless of metal thickness.

7.5.4 With reference to Table 7.1 and Table 7.2, a supporting frame is a structure of angle or channel, or a folded rigid section of sheet metal, that is rigidly attached and has essentially the same outside dimensions as the enclosure surface and sufficient torsional rigidity to resist the bending moments that may be applied via the enclosure surface when it is deflected. Equivalent reinforcing may be accomplished by constructions that will produce a structure that is as rigid as one built with a frame of angles or channels. Constructions considered to be without supporting frame include:

a) A single sheet with single formed flanges (formed edges);

b) A single sheet that is corrugated or ribbed;

c) An enclosure surface loosely attached to a frame – for example, with spring clips; and

d) An enclosure surface having an unsupported edge.

AVA Documents
Document Sharing Hub

Full document details: UL 916 2021

7.6 Nonmetallic

7.6.1 The requirements in 7.6.2 – 7.6.8 apply to polymeric enclosures.

7.6.2 A nonmetallic enclosure or enclosure part shall have mechanical strength and durability and be formed so that operating parts will be protected against damage and shall resist the abuses likely to be encountered during installation and normal use and service.

7.6.3 An enclosure or enclosure part shall protect persons against a risk of electric shock, and the material shall not create or contribute to a risk of fire, electric shock, or injury to persons.

7.6.4 Among the factors that are to be taken into consideration when judging a nonmetallic enclosure are:

a) Mechanical strength;

b) Resistance to impact;

c) Moisture absorption;

d) Resistance to combustion and to ignition from electrical sources;

e) Dielectric properties, insulation resistance, and resistance to arc tracking; and

f) Resistance to distortion and creeping at temperatures to which the material may be subjected under conditions of normal or abnormal use.

A material shall not display a loss of these properties beyond the minimum required level as a result of aging. Tests on nonmetallic enclosures for stationary equipment and equipment intended to be permanently connected electrically shall be conducted in accordance with Sections 81 – 96.

7.6.5 Enclosures for portable equipment shall be evaluated in accordance with the applicable requirements in the Standard for Polymeric Materials – Use in Electrical Equipment Evaluations, UL 746C.

7.6.6 A polymeric enclosure intended for connection to a permanent wiring system shall withstand the tests described in 61.1.1 – 61.1.6.

7.6.7 If continuity of a grounding system relies on dimensional integrity of a nonmetallic material, the dimensional stability of the material shall be considered in addition to the factors mentioned in 7.6.4. The material shall withstand the Creep and Overcurrent Test, Section 96.

7.6.8 If a bonding means is not assembled to the equipment, the equipment shall be marked in accordance with 75.7.

7.6.9 A part, such as a dial or nameplate, that is a part of an enclosure shall be metal or other material as specified for the enclosure in 7.4.1 – 7.6.4.

7.6.10 A nonmetallic part, such as a reset knob, lever, or button that protrudes through a hole in the enclosure that is not larger than an area of 1 square inch (6.45 cm^2) shall be made of material classified V-2 or better in accordance with the Standard for Tests for Flammability of Plastic Materials for Parts in Devices and Appliances, UL 94.

7.6.11 A nonmetallic part that protrudes through a hole having an area larger than 1 square inch (6.45 cm^2) shall be made of material that complies with the requirements in 7.6.2 – 7.6.4 and 7.6.9. See 8.2.1.

AVA Documents
Document Sharing Hub

Full document details: UL 916 2021

7.6.12 A nonmetallic cover attached by screws shall comply with the Cover Retention Test, Section 62, with the screws loosened one full turn.

7.6.13 Electrical controls employing polymeric parts that are intended to be installed in air handling spaces or in other environmental air space (plenums) shall be investigated for the application and their fire-resistance and low-smoke-producing characteristics in accordance with the Standard for Fire Test for Heat and Visible Smoke Release for Discrete Products and Their Accessories Installed in Air-Handling Spaces, UL 2043.

7.7 Windows

7.7.1 Glass covering an observation opening shall be secured in place so that it cannot be readily displaced in service, and shall provide mechanical protection for the enclosed parts.

7.7.2 Glass for an opening not more than 4 inches (101.6 mm) in any dimension shall be at least 1/16 inch (1.6 mm) thick, and glass for a larger opening, but not more than 144 square inches (929 cm^2) in area and having no dimension greater than 12 inches (304.8 mm), shall be at least 1/8 inch (3.2 mm) thick. Glass used to cover an area larger than 144 square inches shall not be less than 1/8 inch thick and shall conform to one of the following:

a) The glass shall be of a nonshattering or tempered type that, when broken, shall conform to the performance specifications in the Performance Specifications and Methods of Test for Safety Glazing Material Used in Buildings, ANSI Z97.1-1975; or

b) Shall withstand the 2.5 foot-pound (2.4 J) impact specified in the Glass Window Impact Test, Section 64.

7.7.3 A transparent material other than glass used as a covering over an opening in an enclosure shall comply with the requirements in 7.6.2 – 7.6.4 and 7.6.9 – 7.6.12.

7.8 Raintight and rainproof enclosures

7.8.1 When subjected to the Rain Test, Section 60, an enclosure designated as:

a) Raintight shall be constructed so that rain does not enter the enclosure.

b) Rainproof shall be constructed so that rain does not interfere with the operation of the apparatus used within the enclosure.

7.8.2 A raintight or rainproof enclosure shall be marked as specified in 72.7.

7.8.3 A gasket used to make an enclosure raintight or rainproof shall be tested as specified in the Accelerated Aging Tests, Section 58.

7.8.4 A raintight or rainproof enclosure shall be provided with external means for mounting.

Exception: A rainproof enclosure may be provided with internal means for mounting if the mounting means is constructed so that water cannot enter the enclosure.

7.8.5 An opening for conduit in a raintight enclosure, other than in the bottom of the enclosure, shall either be threaded, or accommodate a specific hub complying with the requirements for such devices.

7.8.6 An opening for conduit in a rainproof enclosure shall either:

Documents
Document Sharing Hub
Full document details: UL 916 2021

a) Be threaded or

b) Accommodate a specific hub complying with the requirements for such devices unless the opening is located wholly below the lowest terminal lug or other live part within the enclosure. There shall be provision for drainage of the enclosure if a knockout or unthreaded hole is provided other than in the bottom.

8 Openings in Enclosures

8.1 Ventilating openings

8.1.1 A ventilating opening shall not be provided in an enclosure that houses a fuse or any portion of a circuit breaker other than the operating handle, unless the construction affords containment of electrical breakdown disturbances equivalent to that provided by an enclosure complying with the requirements in 7.2.5 – 7.2.7.

8.1.2 A ventilating opening shall not be provided in a compartment or part of an enclosure that contains field-wiring splices in a line-voltage circuit.

8.1.3 A ventilating opening shall not be located in a mounting surface of an enclosure.

8.1.4 The shortest distance between a ventilating opening and the bottom of an enclosure or a wall-mounting surface shall be at least one-quarter of the enclosure height or depth, respectively, or 1 inch (25.4 mm), whichever is less.

8.1.5 A ventilating opening may be provided in the bottom surface of an enclosure if the opening does not permit materials to fall directly out from the interior of the unit. Figure 8.1 illustrates a construction that meets this requirement.

Documents
Document Sharing Hub
Full document details: UL 916 2021

Figure 8.1

Bottom panel baffles

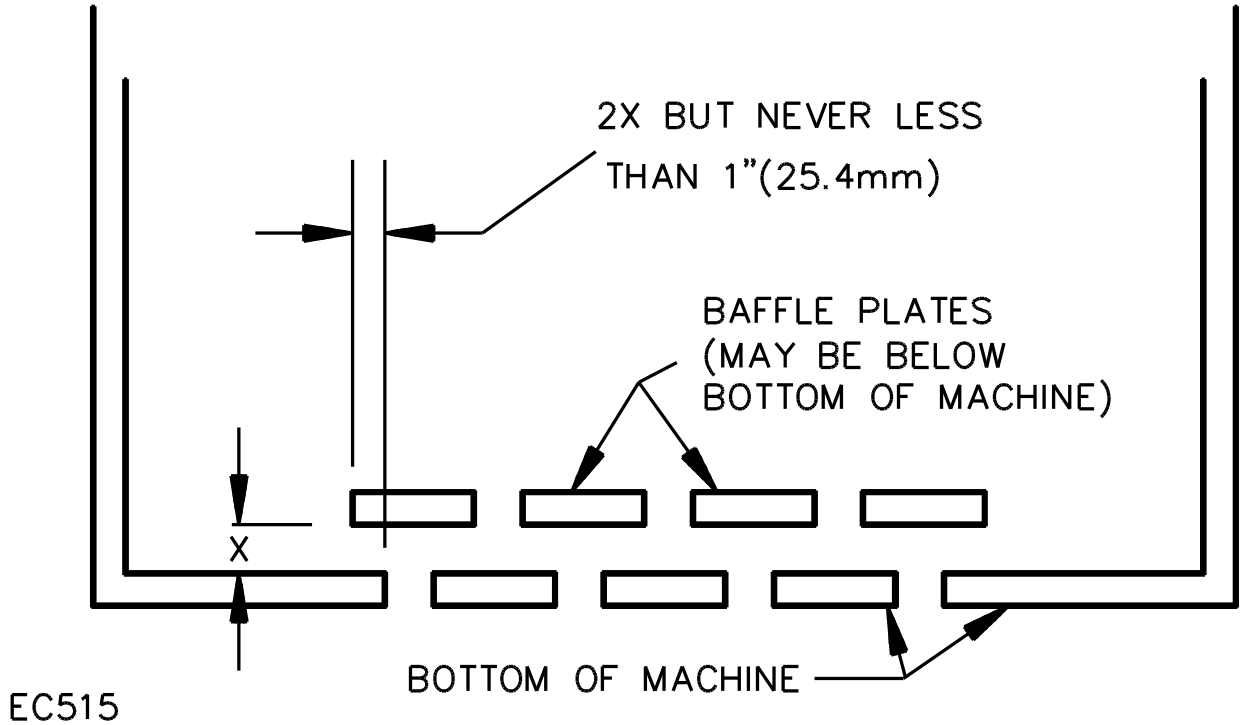

8.1.6 There shall be no emission of flame or molten material through a ventilating opening, or manifestation of risk of fire, during normal tests or during abnormal tests, such as transformer burnout and burnout of a relay with blocked armature.

8.1.7 Unless the construction of equipment provided with forced ventilation is such that there is no direct path between live parts and the outlet opening, burnout tests in addition to those mentioned in 8.1.6 shall be conducted to determine that there is no emission of flame or molten material through that opening.

8.1.8 Air from a ventilating opening, either forced or otherwise, shall not be directed:

a) Into a duct or into a concealed space in a building,

b) Against the mounting surface, and

c) So that a disturbance may be propagated to other equipment.

8.1.9 See Accessibility of Uninsulated Live Parts, Film-Coated Wire, and Moving Parts, Section 12, for requirements for accessibility of live parts in an enclosure having ventilating openings.

8.2 Other openings

8.2.1 The smaller dimension (width) of an opening in an enclosure around a dial, adjusting knob, lever, handle, pointer, or the like shall not be more than 1/8 inch (3.2 mm) for any setting or position of the dial, knob, or other members.

Documents
Document Sharing Hub
Full document details: UL 916 2021

8.2.2 Except for the openings described in 8.1.1 – 8.1.7, an enclosure shall have no open holes other than:

a) Not more than four unused holes intended for mounting various components inside the enclosure. The largest dimension of each such opening shall not be more than 3/16 inch (4.8 mm).

b) Not more than four holes 1/8 inch (3.2 mm) or less in diameter for the escape of air or drainage of paint during a painting process, located as close to the corners of the enclosure as possible, preferably at the rear of the enclosure.

c) A drainage opening in a rainproof enclosure that shall not exceed 1/4 by 1/4 inch (6.4 by 6.4 mm).

d) Not more than:

1) Four holes for mounting an enclosure having a maximum dimension of 18 inches (457 mm);

2) Six holes for an enclosure with a maximum dimension more than 18 inches but less than 48 inches (1.2 m); and

3) Eight holes for an enclosure with a maximum dimension of 48 inches or more.

Four of the holes for mounting an enclosure with a maximum dimension of 12 inches (305 mm) may be keyhole slots having the configuration illustrated in Figure 8.2. The dimensions specified in Figure 8.2 may vary if the area is equivalent. Four of the holes for mounting a larger enclosure may be keyhole slots, the dimensions of which are not specified, and which will be evaluated with regard to the enclosure dimensions and configurations.

e) The unclosed portion of an opening for passage of a capillary tube, an air pipe, a bellows, or other necessary mechanism, which shall not exceed 1/16 inch (1.6 mm).

Documents
Document Sharing Hub

Full document details: UL 916 2021

Figure 8.2

Keyhole slot

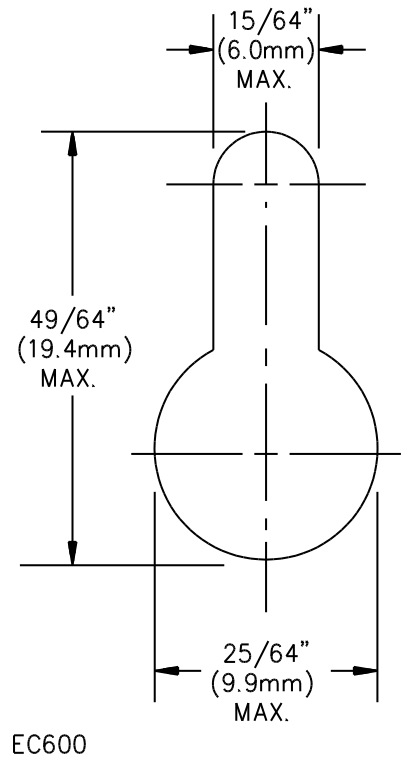

8.2.3 A plate or plug for an unused conduit opening or other hole in an enclosure shall have a thickness not less than:

a) 0.014 inch (0.36 mm) for steel or 0.019 inch (0.48 mm) for nonferrous metal for a hole having a 1/4 inch (6.35 mm) maximum dimension and

b) 0.027 inch (0.69 mm) for steel or 0.032 inch (0.81 mm) for nonferrous metal for a hole having a 1-3/8 inch (34.9 mm) maximum dimension. A closure for a larger hole shall have a thickness equal to that required for the enclosure of the equipment, or a standard knockout seal shall be used.

Such a plate or plug shall be securely mounted.

8.3 Screens and expanded metal

8.3.1 The wires of a screen shall not be less than 16 AWG (1.3 mm^2) if used in openings 1/2 square inch (3.2 cm^2) or less in area, and shall not be less than 12 AWG (3.3 mm^2) for larger openings.

8.3.2 Perforated sheet steel and sheet steel employed for expanded metal mesh shall not be less than 0.042 inch (1.07 mm) thick – 0.045 inch (1.14 mm) if zinc coated – for mesh openings or perforations 1/2 square inch (3.2 cm^2) or less in area and shall not be less than 0.080 inch (2.03 mm) thick – 0.084 inch (2.13 mm) if zinc coated – for larger openings.

Exception: Expanded metal mesh that complies with the requirements in 8.3.3 may be used.

8.3.3 In small equipment where the indentation of a guard or enclosure will not alter the clearance between uninsulated, movable, current-carrying parts and grounded metal so as to adversely affect

Documents
Document Sharing Hub
Full document details: UL 916 2021

performance or reduce spacings below the minimum values specified in Table 29.1, 0.020 inch (0.51 mm) expanded metal mesh – 0.023 inch (0.58 mm) if zinc coated – may be used, if:

a) The exposed mesh on any one side or surface of the device so protected has an area of not more than 72 square inches (464.5 cm^2) and has no dimension greater than 12 inches (305 mm) or

b) The width of an opening so protected is not greater than 3-1/2 inches (88.9 mm).

8.4 Wire openings

8.4.1 If threads for the connection of conduit are tapped all the way through a hole in an enclosure wall, or if an equivalent construction is used, there shall not be less than three threads in the metal, and the construction of the equipment shall be such that a conduit bushing can be attached.

8.4.2 If threads for the connection of conduit are not tapped all the way through a hole in:

a) An enclosure wall,

b) Conduit hub, or

c) A similar part,

there shall not be less than 3-1/2 threads in the metal and there shall be a smooth, rounded inlet hole for the conductors that affords protection to the conductors equivalent to that provided by a standard conduit bushing and that has an internal diameter approximately the same as that of the corresponding trade size of rigid conduit.

8.4.3 In an enclosure threaded for support by rigid conduit, at least five full threads shall be provided for engaging the conduit.

8.4.4 A conduit hub or nipple attached to the enclosure of a pressure switch or similar equipment by swaging, staking, or similar means shall withstand the pullout, torque, and bending tests described in 61.1.2 – 61.1.4.

8.4.5 Equipment provided with a conduit nipple and no mounting holes, and marked for direct attachment to an outlet box, need not be subjected to the torque, bending moment, and pull tests, but shall withstand the impact specified in 61.1.6.

Exception: A metallic enclosure with a welded-on nipple need not be subjected to the test described in 61.1.6.

8.4.6 Each clamp and fastener for the attachment of:

a) Conduit;

b) Electrical metallic tubing;

c) Armored cable;

d) Nonmetallic flexible tubing;

e) Nonmetallic-sheathed cable;

f) Service cable; or

g) Similar items

Documents
Document Sharing Hub

Full document details: UL 916 2021

that is supplied as a part of an enclosure shall comply with the requirements in the Standard for Conduit, Tubing, and Cable Fittings, UL 514B.

8.4.7 A knockout in a sheet-metal enclosure shall be reliably secured but shall be capable of being removed without undue deformation of the enclosure.

8.4.8 A knockout shall be provided with a flat surrounding surface for proper seating of a conduit bushing, and shall be located so that installation of a bushing at any knockout likely to be used during installation will not result in a spacing between uninsulated live parts and the bushing less than that required by this standard.

8.4.9 For an enclosure not provided with conduit openings or knockouts, spacings not less than the minimum required by this standard shall be provided between uninsulated live parts and a conduit bushing installed at any location likely to be used during installation. Permanent marking on the enclosure, a template, or a full-scale drawing furnished with the equipment may be used to limit such a location.

8.4.10 With regard to the requirement in 8.4.9, means shall be provided so that an opening for conduit can be made without subjecting internal parts to contamination resulting from the presence of metallic particles.

8.4.11 In measuring a spacing between an uninsulated live part and a bushing installed in the knockout referred to in 8.4.8 and 8.4.9, it is to be assumed that a bushing having the dimensions in Table 8.1 is in place, and that a single locknut is installed on the outside of the enclosure.

8.4.12 No wire other than wires leading to a part mounted on a door or cover shall be brought out through the door or cover.

Table 8.1
Dimensions of bushings

Trade size of conduit,	Overall diameter,		Height,	
inches	inches	(mm)	inches	(mm)
1/2	1	(25.4)	3/8	(9.5)
3/4	1-15/64	(31.4)	27/64	(10.7)
1	1-19/32	(40.5)	33/64	(13.1)
1-1/4	1-15/16	(49.2)	9/16	(14.3)
1-1/2	2-13/64	(56.0)	19/32	(15.1)
2	2-45/64	(68.7)	5/8	(15.9)
2-1/2	3-7/32	(81.8)	3/4	(19.1)
3	3-7/8	(98.4)	13/16	(20.6)
3-1/2	4-7/16	(112.7)	15/16	(23.8)
4	4-31/32	(126.2)	1	(25.4)
4-1/2	5-35/64	(140.9)	1-1/16	(27.0)
5	6-7/32	(158.0)	1-3/16	(30.2)
6	7-7/32	(183.4)	1-1/4	(31.8)

Documents
Document Sharing Hub
Full document details: UL 916 2021

9 Mounting

9.1 Equipment that is intended to be fastened in place shall have provision for mounting it securely in position. Bolts, screws, or other parts used for mounting the equipment shall be independent of those used to secure components of the equipment to the frame, base, or panel.

9.2 Portable equipment shall not be provided with means for permanent mounting.

10 Mechanical Assembly

10.1 A control switch, lampholder, attachment-plug receptacle, or plug connector provided as a part of the equipment shall be mounted securely and shall be prevented from turning by means other than friction between surfaces.

10.2 A lock washer, applied as intended, may be used to prevent a control switch from turning.

10.3 The equipment shall be assembled in accordance with 10.4 – 10.6 so that it will not be adversely affected by the vibration of normal operation.

10.4 Screws and nuts that attach operating parts to movable members shall be upset or otherwise locked to prevent loosening under the conditions of actual use.

10.5 An uninsulated live part, including a terminal, shall be secured to its supporting surface by a means other than friction between surfaces so that it will be prevented from turning or shifting in position if such motion may result in reduction of spacings to less than those required by this standard. Contact assemblies shall be secured so as to provide continued alignment of contacts.

10.6 A lock washer, applied as intended, may be used at a terminal or connection stud.

11 Operating Mechanism

11.1 The equipment shall be investigated under conditions of actual service to determine if it complies with all applicable requirements.

11.2 For equipment using electronic or solid-state components or circuits to control a motor, solenoid coil, or other inductive load, it shall be determined that the controlled load will not be caused to overheat due to half-waving or wave distortion of the controller output. This may be accomplished by testing the combination in accordance with 48.2.1, by incorporating protective devices into the controller, or by other equivalent means.

11.3 An operating mechanism shall not subject manually-operated switch parts to undue stress.

11.4 The position of an operating handle shall be marked, if necessary, as a guide for proper operation.

11.5 A control that has or is intended to have a marked off position or an implied off position shall:

a) Open all ungrounded conductors of the circuit with an air gap when the adjusting means is in the off position and

b) Be prevented from functioning automatically when in the off position either by a positive mechanical means or the equivalent.

Documents
Document Sharing Hub
Full document details: UL 916 2021

11.6 With reference to the requirements in 11.5, the off state of a solid-state switch is not considered to be an open circuit.

11.7 A component, such as a resistor, capacitor, diode, and the like, shall not be connected across the contacts of a safety control or a protective or limiting device.

Exception: A component may be connected across the contacts of a safety control if investigated and determined to comply with the requirements for use in the end product.

12 Accessibility of Uninsulated Live Parts, Film-Coated Wire, and Moving Parts

12.1 To reduce the risk of unintentional contact that may involve a risk of electric shock from an uninsulated live part or film-coated wire, or injury to persons from a moving part, an opening in an enclosure shall comply with either (a) or (b).

a) For an opening that has a minor dimension (see 12.5) less than 1 inch (25.4 mm), such a part or wire shall not be contacted by the probe illustrated in Figure 12.1.

b) For an opening that has a minor dimension of 1 inch or more, such a part or wire shall be spaced from the opening as specified in Table 12.1.

Exception: A motor other than one used in either a hand-held product or a hand-supported portion of a product need not comply with these requirements if it complies with the requirements in 12.2.

Documents
Document Sharing Hub

Full document details: UL 916 2021

Figure 12.1

Articulate probe with web stop

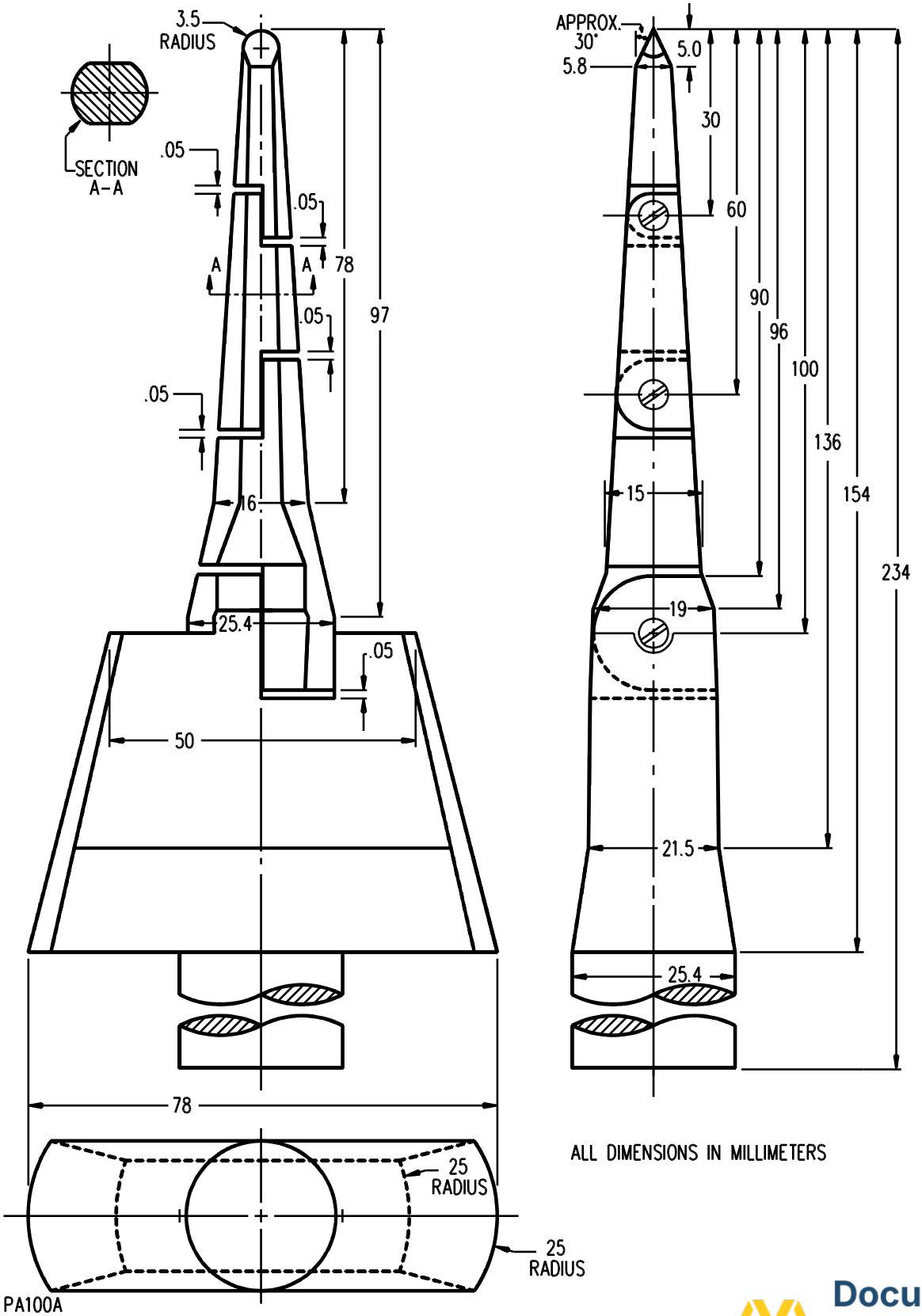

Documents
Document Sharing Hub
Full document details: UL 916 2021

Table 12.1
Minimum distance from an opening to a part that may involve a risk of electric shock or injury to persons

Minor dimension[a] of opening,		Minimum distance from opening to part,	
inches[b]	(mm)	inches[b]	(mm)
3/4[c]	(19.1)	4-1/2	(114.0)
1	(25.4)	6-1/2	(165.0)
1-1/4	(31.8)	7-1/2	(190.0)
1-1/2	(38.1)	12-1/2	(318.0)
1-7/8	(47.6)	15-1/2	(394.0)
2-1/8	(54.0)	17-1/2	(444.0)
d	d	30	(762.0)

[a] See 12.5 for explanation of diameter of opening.

[b] Between 3/4 and 2-1/8 inches, interpolation is to be used to determine a value between values specified in the table.

[c] Any dimension less than 1 inch applies to a motor only.

[d] More than 2-1/8 inches, but not more than 6 inches (152.0 mm).

12.2 With reference to a part or wire in an integral enclosure of a motor as mentioned in the Exception to 12.1:

a) An opening may have a minor dimension (see 12.5) less than 3/4 inch (19.1 mm) if:

1) A moving part cannot be contacted by the probe illustrated in Figure 12.2;

2) Film-coated wire cannot be contacted by the probe illustrated in Figure 12.3;

3) In a directly accessible motor (see 12.7), an uninsulated live part cannot be contacted by the probe illustrated in Figure 12.4; and

4) In an indirectly accessible motor (see 12.6), an uninsulated live part cannot be contacted by the probe illustrated in Figure 12.2.

b) An opening may have a minor dimension of 3/4 inch or more if a part or wire is spaced from the opening as specified in Table 12.1.

Documents
Document Sharing Hub
Full document details: UL 916 2021

Figure 12.2

Probe for moving parts and uninsulated live parts

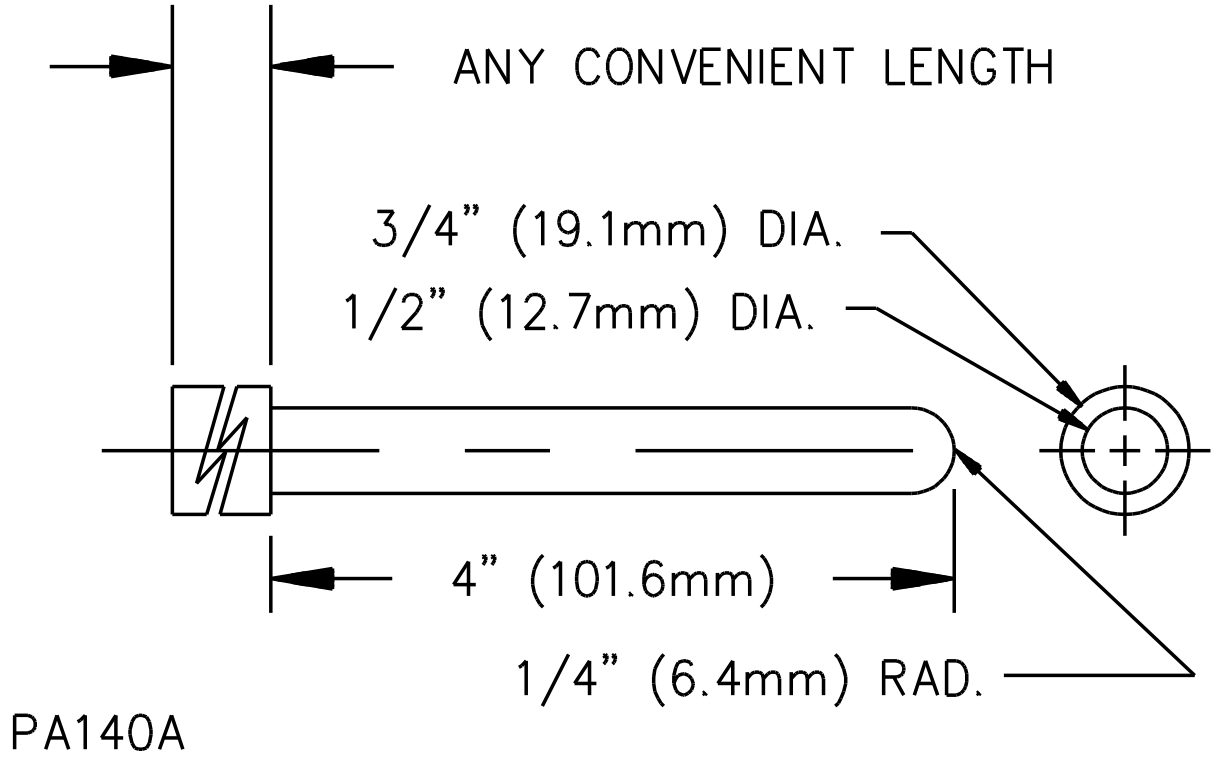

Documents
Document Sharing Hub
Full document details: UL 916 2021

Figure 12.3

Probe for film-coated wire

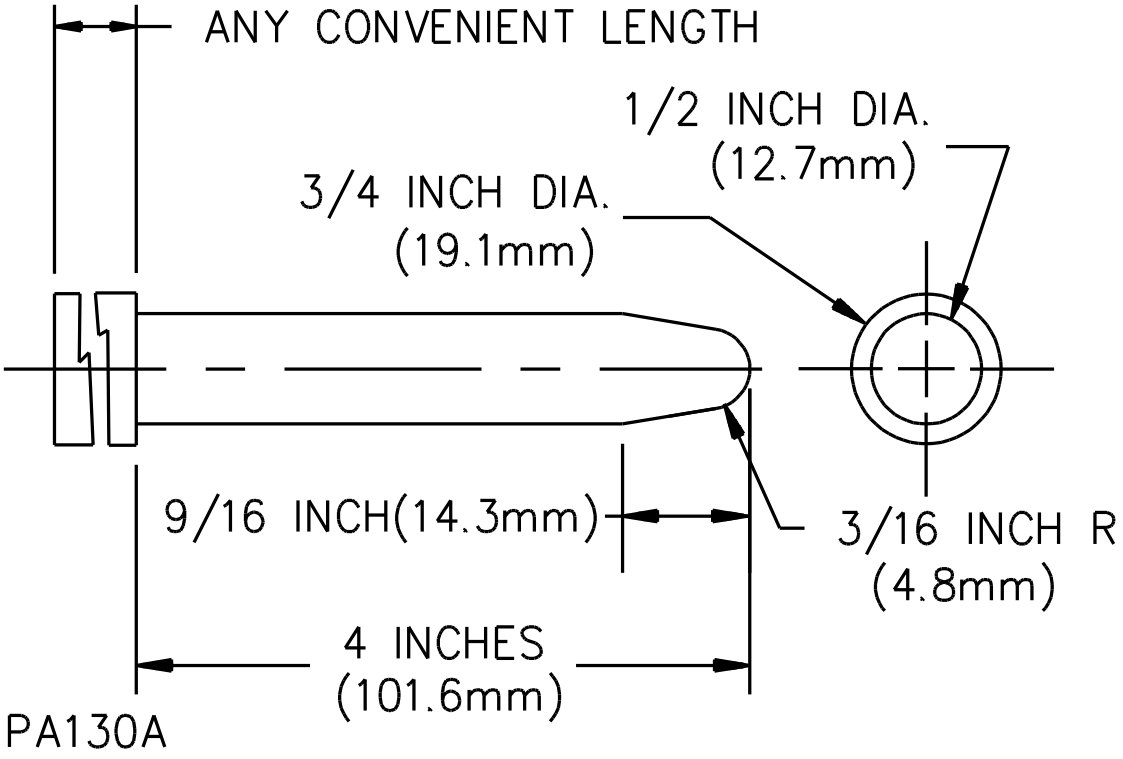

Documents
Document Sharing Hub
Full document details: UL 916 2021

Figure 12.4

Articulate probe

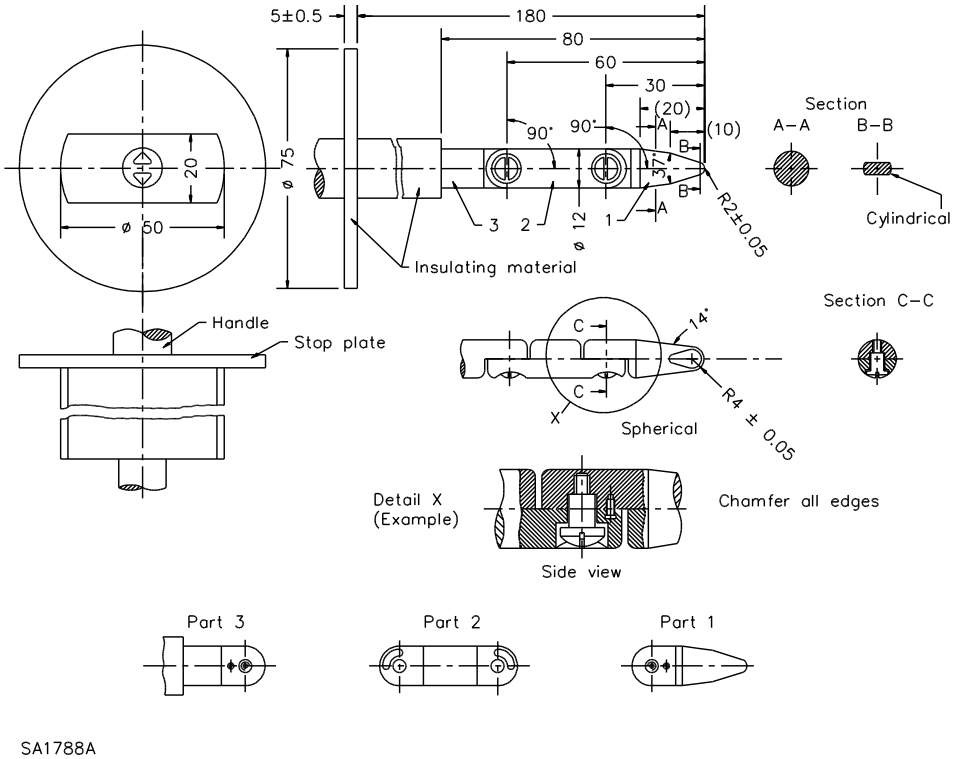

12.3 The probes mentioned in 12.1 and 12.2 and illustrated in Figure 12.1 – Figure 12.4 are to be applied to any depth that the opening will permit; and are to be rotated or angled before, during, and after insertion through the opening to any position that is necessary to examine the enclosure. The probes illustrated in Figure 12.1 and Figure 12.4 are to be applied in any possible configuration; and, if necessary, the configuration is to be changed after insertion through the opening.

12.4 The probes mentioned in 12.3 and 12.5 shall be used as measuring instruments to judge the accessibility provided by an opening, and not as instruments to judge the strength of a material; they shall be applied with the minimum force necessary to determine accessibility.

12.5 With reference to the requirements in 12.1 and 12.2, the minor dimension of an opening is the diameter of the largest cylindrical probe having a hemispherical tip that can be inserted through the opening.

12.6 With reference to the requirements in 12.2, an indirectly accessible motor is a motor that is:

a) Accessible only by opening or removing a part of the outer enclosure, such as a guard or panel, that can be opened or removed without using a tool or

b) Located at such a height or is otherwise guarded or enclosed so that it is unlikely to be contacted.

12.7 With reference to the requirements in 12.2, a directly accessible motor is a motor that can be contacted without opening or removing any part, or is located so as to be accessible to contact.

Documents
Document Sharing Hub
Full document details: UL 916 2021

12.8 During the examination of a product to determine whether it complies with the requirements in 12.1 or 12.2, a part of the enclosure that may be opened or removed by the user without using a tool (to attach an accessory, to make an operating adjustment, or for other reasons) is to be opened or removed.

12.9 With reference to the requirements in 12.1 and 12.2, insulated brush caps are not required to be additionally enclosed.

13 Protection Against Corrosion

13.1 Iron and steel parts shall be protected against corrosion by:

a) Enameling;

b) Galvanizing;

c) Sherardizing;

d) Plating; or

e) Other equivalent means.

Exception No. 1: Bearings, thermal elements, or the like, if such protection is impracticable, need not be protected.

Exception No. 2: Small minor parts of iron or steel, such as washers, screws, bolts, and the like, that do not carry current need not be protected if corrosion of such unprotected parts would not be likely to result in a risk of fire, electric shock, or injury to persons.

Exception No. 3: Parts made of stainless steel, properly polished or treated if necessary, need not be protected.

13.2 The requirement in 13.1 applies to all enclosing cases whether of sheet steel or cast iron, and to all springs and other parts upon which proper mechanical operation may depend.

13.3 An enclosure designated either raintight or rainproof shall be protected against corrosion in accordance with the requirements in 13.4 – 13.18.

13.4 Metal shall be used in combinations that are galvanically compatible.

13.5 A hinge or other attachment shall be resistant to corrosion.

13.6 These requirements do not contemplate corrosion that might be caused by exposure to the earth or other corrosive agents.

13.7 The requirements in 13.8 – 13.18 do not apply to a part, such as a decorative grille, that is not a required part of an enclosure.

13.8 A nonmetallic enclosure is to be evaluated on the basis of the effect of exposure to ultraviolet light and water. See Component Evaluation, Section 66.

13.9 A metallic enclosure shall be protected against corrosion as specified in 13.10 – 13.18. See 7.3.1 – 7.5.4 for the required enclosure thickness.

Documents
Document Sharing Hub

Full document details: UL 916 2021

13.10 Copper, bronze, brass containing not less than 80 percent copper, or stainless steel may be used without additional protection against corrosion. Sheet, extruded or cast aluminum, die-cast zinc, or other metal shall be of a grade or alloy having resistance to atmospheric corrosion equivalent to that specified for sheet steel of the required thickness, or shall be subjected to appropriate tests, or shall be additionally protected against corrosion.

13.11 An enclosure of cast iron or malleable iron at least 1/8 inch (3.2 mm) thick shall be protected against corrosion by:

a) A 0.00015-inch (0.0038-mm) thick coating of zinc, cadmium, or the equivalent on the outside surface and a visible coating of such metal on the inside surface or

b) One coat of an organic finish of the epoxy or alkyd-resin type or other outdoor paint on each surface.

13.12 Unless the paint can be determined to comply with these requirements by consideration of its composition, corrosion tests are required.

13.13 An enclosure of sheet steel less than 0.126 inch (3.20 mm) thick if zinc-coated or 0.123 inch (3.12 mm) thick if uncoated shall be protected against corrosion by one of the following means or by other metallic or nonmetallic coatings that have been found to give equivalent protection as described in 13.16.

a) Hot-dipped, mill-galvanized sheet steel conforming with the coating Designation G90 in Table I of the Standard Specification for Steel Sheet, Zinc Coated (Galvanized) or Zinc-Iron Alloy-Coated (Galvannealed) by the Hot Dip Process, ASTM A653/A653M, with not less than 40 percent of the zinc on any side, based on the minimum single-spot test requirement in this ASTM designation. The weight of zinc coating may be determined by any appropriate method; however, in case of question, the weight of coating shall be established in accordance with the Standard Test Method for Weight of Coating on Zinc Coated (Galvanized) Iron or Steel Articles of ASTM A90-87.

b) A zinc coating, other than that provided on hot-dipped, mill-galvanized sheet steel, uniformly applied to an average thickness of not less than 0.00061 inch (0.0155 mm) on each surface with a minimum thickness of 0.00054 inch (0.0137 mm). The thickness of the coating shall be established by the Metallic Coating Thickness Test, Section 59. An annealed coating shall also comply with 13.18.

c) A zinc coating complying with 13.14 (a) or (b) with one coat of an organic finish of the epoxy or alkyd-resin type or other outdoor paint on each surface applied after forming. See 13.12.

d) A cadmium coating not less than 0.001 inch (0.03 mm) thick on both surfaces. The thickness of coating shall be established in accordance with the Metallic Coating Thickness Test, Section 59.

e) A cadmium coating not less than 0.00075 inch (0.0191 mm) thick on both surfaces with one coat of outdoor paint on both surfaces, or not less than 0.00051 inch (0.013 mm) thick on both surfaces with two coats of outdoor paint on both surfaces. The thickness of the cadmium coating shall be established in accordance with the Metallic Coating Thickness Test, Section 59, and the paint shall be as specified in (c).

13.14 An enclosure of sheet steel not less than 0.126 inch (3.20 mm) thick if zinc-coated or not less than 0.123 inch (3.12 mm) thick if uncoated shall be protected against corrosion by one of the following means or by other metallic or nonmetallic coatings that have been shown to give equivalent protection as described in 13.16.

a) Hot-dipped, mill-galvanized sheet steel conforming with the coating Designation G60 or A60 in Table I of the Standard Specification for Steel Sheet, Zinc Coated (Galvanized) or Zinc-Iron Alloy-Coated (Galvannealed) by the Hot-Dip Process, General Requirements, ASTM A653/A653M, with

AVA Documents
Document Sharing Hub
Full document details: UL 916 2021

not less than 40 percent of the zinc on any side, based on the minimum single-spot test requirement in this ASTM designation. The weight of zinc coating may be determined by any appropriate method; however, in case of question, the weight of coating shall be established in accordance with the Standard Test Method for Weight of Coating on Zinc-Coated (Galvanized) Iron or Steel Articles, ASTM A90-87.

b) A zinc coating, other than that provided on hot-dipped, mill-galvanized sheet steel, uniformly applied to an average thickness of not less than 0.00041 inch (0.0104 mm) on each surface with a minimum thickness of 0.00034 inch (0.0086 mm). The thickness of the coating shall be established by the Metallic Coating Thickness Test, Section 59.

c) Two coats of an organic finish of the epoxy or alkyd resin or other outdoor paint on each surface. Compliance with these requirements is to be determined by consideration of the composition of the paint or by corrosion tests.

d) Any one of the means specified in 13.13.

13.15 The requirements in 13.14 also apply to an enclosure of zinc-coated sheet steel not less than 0.056 inch (1.42 mm) thick and an enclosure of uncoated sheet steel not less than 0.053 inch (1.35 mm) thick if the enclosure is intended to be mounted within and protected from direct exposure to weather by the enclosure of other equipment, such as an air conditioner. Such an enclosure shall not be marked rainproof or raintight.

13.16 With reference to 13.13 – 13.15, other finishes, including paints, metallic finishes and combinations of the two may be used when comparative tests with galvanized sheet steel – without annealing, wiping or other surface treatment – complying with 13.13(a) or 13.14(a), as applicable, indicate they provide equivalent protection. Among the factors that are to be taken into consideration when judging the compliance of such coating systems are exposure to salt spray, moist carbon dioxide-sulphur dioxide-air mixtures, moist hydrogen sulphide-air mixtures, ultraviolet light and water.

13.17 If tests are required, test specimens of a finish as described in 13.12, 13.13(c), 13.14(c), or 13.16, if the paint is tested, are to be consistent with the finish that is to be used in production with regard to the base metal, cleaning or pretreatment method, application method, number of coats, curing method, thickness, or the like.

13.18 A hot-dipped, mill-galvanized A60 (alloyed) coating or an annealed zinc coating that is bent or similarly formed after annealing and that is not otherwise required to be painted shall be painted in the bent or formed area if the bending or forming process damages the zinc coating, except that such areas on the inside surface of an enclosure that water does not enter during the rain test need not be painted. The zinc coating is considered to be damaged if flaking or cracking of the zinc coating at the outside radius of the bent or formed section is visible at 25 power magnification. Simple sheared or cut edges and punched holes are not considered to be formed.

14 Insulating Materials

14.1 A barrier or integral part, such as an insulating washer or bushing, and a base or a support for mounting live parts, shall be moisture-resistant material that will not be adversely affected by the temperature and stresses to which it will be subjected under conditions of use.

14.2 Insulating material shall be evaluated with regard to its use. Materials, such as mica, some molded compounds, and certain refractory materials usually comply with the requirements for sole support of live parts. When an investigation is required to determine whether a material complies, the investigation shall be conducted in accordance with the Standard for Polymeric Materials – Use in Electrical Equipment Evaluations, UL 746C, with consideration given to:

Documents
Document Sharing Hub
Full document details: UL 916 2021

a) The material's;

1) Mechanical strength;

2) Resistance to hot wire ignition;

3) Resistance to high-current-arc ignition;

4) Resistance to high-voltage-arc ignition;

5) Dielectric strength;

6) Insulation resistance; and

7) Heat-resistant qualities

in both the aged and unaged conditions;

b) The degree to which the material is enclosed; and

c) Any other feature affecting the risk of fire, electric shock, or injury to persons.

All factors are to be considered with regard to conditions of actual service.

14.3 Ordinary vulcanized fiber may be used for insulating bushings, washers, separators, and barriers, but not as sole support for uninsulated live parts.

14.4 A sensor such as a current transformer, transducer, or the like, shall be provided with insulation that has been evaluated for the maximum voltage and temperature involved in its application, while taking into consideration the presence of other circuits.

14.5 All internal polymeric parts shall be classified at least HB in accordance with the Standard for Tests for Flammability of Plastic Materials for Parts in Devices and Appliances, UL 94.

15 Field Connections

15.1 General

15.1.1 Compartments, raceways, and the like, for routing and stowage of conductors connected in the field shall not contain rough, sharp, or moving parts that may damage conductor insulation.

15.2 Equipment permanently connected electrically

15.2.1 For power circuit connections, permanently-connected equipment shall have provision for the connection of a wiring system.

15.2.2 Wiring terminals or leads shall be provided and shall comply with the requirements for the connection of conductors having an ampacity not less than the largest of the following ratings that are applicable:

a) One hundred twenty-five percent of the ampere rating of an electric space-heating equipment load that is to be permanently connected electrically.

b) One hundred twenty-five percent of a continuous duty load.

Documents
Document Sharing Hub

Full document details: UL 916 2021

c) One hundred twenty-five percent of the full-load motor-current rating in accordance with 71.4 and 71.5. See Table 49.2 or Table 49.3 for the ampere rating corresponding to a horsepower rating.

d) For a combination load, 125 percent of the full-load motor current of the largest motor, plus 125 percent of the ampere rating of an electric space-heating equipment load that is to be permanently connected electrically, plus 125 percent of the continuous duty load, plus 100 percent of the sum of the current ratings of all other loads.

e) For direct-current motors intended to be operated from a rectified single-phase power supply unless marked in accordance with 73.18,

1) One hundred ninety percent if a half-wave rectifier is used.

2) One hundred fifty percent if a full-wave rectifier is used.

f) The ampere rating of the equipment for a load not specified in (a), (b), (c), (d), or (e).

15.2.3 With reference to 15.2.2, it is assumed that 75°C (167°F) conductors will be employed for currents of more than 100 amperes.

15.2.4 For equipment marked to indicate that it may be used with copper, copper-clad aluminum, or aluminum conductors, the field wiring terminals shall comply with the requirements for such devices and with the requirement in 15.2.2 for a wire of each metal for which it is marked. See 73.12.

15.2.5 A terminal box or compartment on equipment permanently connected electrically shall be located so that wire connections therein will be accessible for inspection, without disturbing either factory or field connected wiring, after the equipment is installed in the intended manner.

Exception No. 1: Wire connections to equipment intended to be mounted on an outlet box may be accessible upon removal of the equipment from the outlet box.

Exception No. 2: Factory supplied low-voltage, non-safety circuit wire connected to a hinged panel or cover may be flexed.

15.2.6 A field-wiring lead shall not be more than two standard wire sizes smaller than the copper conductor to which it will be connected, and shall not be smaller than 18 AWG (0.82 mm^2). For example, a 10 AWG (5.3 mm^2) or larger field-wiring lead is required for connection to a 6 AWG (13.3 mm^2) field-provided conductor. A field-wiring lead shall not be less than 6 inches (152.4 mm) long. Insulation on such a lead shall be:

a) At least 1/32-inch (0.8-mm) thick thermoplastic;

b) At least 1/64-inch (0.4-mm) thick rubber plus a braid cover for 300-volt or less applications; or

c) At least 1/32-inch thick rubber plus a braid cover for applications between 301 and 600 volts.

Exception No. 1: An 18 AWG size field-wiring lead may be provided for connection to a No. 12 (3.3 mm^2) size branch circuit conductor.

Exception No. 2: A lead may be more than two wire sizes smaller than the field-provided copper conductor to which it will be connected, but not smaller than 18 AWG, if more than one factory-provided copper lead is intended for connection to the same field-provided lead, and the construction complies with the following conditions:

Documents
Document Sharing Hub
Full document details: UL 916 2021

a) A wire connector for connection of the field-provided wire is provided as part of the unit or remote-control assembly, and the wire connector can be used with the combination of wires that will be spliced;

b) The factory-provided leads are bunched or otherwise arranged so that stress does not result on an individual lead; and

c) The equipment is marked in accordance with 73.14.

15.2.7 A pigtail lead intended for field-wiring connection shall be subjected to the test specified in 57.1.2.

15.2.8 A lead provided for connection to an external line-voltage circuit shall not be connected to a wire-binding screw or pressure terminal connector located in the same compartment as the splice unless the screw or connector is rendered unusable for field-wiring connection or:

a) The lead is insulated at the unconnected end, and

b) A marking on the equipment clearly indicates the intended use of the lead.

15.2.9 The free end of field-wiring leads that will not be used in every installation – such as a tap for a multivoltage transformer or one free lead for a single-pole, double-throw switch – shall be insulated. For a grounding lead see 19.3.9.

15.2.10 Equipment that can be used with a fitting for only one type of wiring system shall be supplied with such a fitting.

15.2.11 An opening for the entry of a conductor or conductors of a circuit of limited power and voltage shall be provided with an insulating bushing. The bushing may be mounted in place in the opening or may be within the enclosure so that it shall be properly mounted when the equipment is installed.

15.2.12 The opening mentioned in 15.2.11 may be used for accommodating armored cable or conduit.

15.2.13 A bushing of rubber or rubber-like material provided in accordance with 15.2.11 shall be not less than 1/8 inch (3.2 mm) thick, except that it may be not less than 3/64 inch (1.2 mm) thick if the metal around the hole is eyeletted or similarly treated to provide smooth edges. A bushing shall be located so that it will not be exposed to oil, grease, oily vapors, or other substances having a deleterious effect on the material of the bushing. A hole in which such a bushing is mounted shall be free from sharp edges, burrs, projections, or the like, that might damage the bushing.

15.3 Terminals

15.3.1 Terminal parts by which supply connections are made shall comply with the requirements in 15.3.2 – 15.3.7 so as to provide good connections even under hard usage.

15.3.2 A wiring terminal shall be able to hold the next larger size conductor than that required in 15.2.2 if the terminal receives the larger size conductor, unless the equipment is marked in accordance with 73.15.

15.3.3 Soldering lugs or solderless (pressure) wire connectors shall be used. A solderless (pressure) connector intended for connection of a 14 AWG (2.1 mm^2) or smaller copper conductor shall comply with the Torque Test specified in the Standard for Wire Connectors, UL 486A-486B, or the Standard for Equipment Wiring Terminals for Use with Aluminum and/or Copper Conductors, UL 486E, at a tightening torque of not less than 7 pound-inches (0.8 N·m).

Documents
Document Sharing Hub
Full document details: UL 916 2021

Exception No. 1: For a 10 AWG (3.5 mm^2) or smaller wire, the parts to which connections are made may consist of clamps or binding screws with terminal plates having upturned lugs or the equivalent to hold the wires in position.

Exception No. 2: Quick-connect terminals may be used for field wiring connections of a Class 2 circuit, providing:

a) The circuit is not a safety control circuit;

b) A positive engaging detent or the equivalent is provided on the connector; and

c) For each such terminal, a mating connector is furnished together with instructions covering the proper method of installation.

15.3.4 A wire-binding screw used at a wiring terminal shall not be smaller than No. 8 (4.2 mm diameter).

Exception: A 6 (3.5 mm diameter) screw may be used for the connection of one 14, 16, or 18 AWG (2.1, 1.3, or 0.82 mm^2) conductor.

15.3.5 A terminal plate tapped for a wire-binding screw shall be of metal not less than 0.030 inch (0.76 mm) thick for a 14 AWG (2.1 mm^2) or smaller wire, and not less than 0.050 inch (1.27 mm) thick for a wire larger than 14 AWG. There shall not be less than two full threads in the metal.

Exception: A low-voltage transformer may have terminal plates 0.030 inch (0.76 mm) thick for either primary or secondary connections.

15.3.6 A terminal plate formed from stock having the required thickness specified in 15.3.5 may have the metal extruded at a tapped hole for a binding screw so as to provide two full threads.

Exception: Two full threads are not required if fewer threads make a connection in which the threads do not strip when it is subjected to a 20-pound-inch (2.3-N·m) tightening torque.

15.3.7 A wire-binding screw shall not thread into material other than metal.

15.3.8 The surface of an insulated lead intended solely for the connection of an equipment-grounding conductor shall be green with or without one or more yellow stripes, and no other lead in a field-wiring compartment shall be so identified.

15.4 Outlet-box-mounted devices

15.4.1 Wiring terminals and other live parts and sharp-edged grounded or dead metal parts of a device intended for mounting on an outlet box or similar enclosure shall be located or protected so that they will not be forced against wiring in the box during installation.

15.4.2 With reference to the requirements in 15.4.1, back wiring terminals may be employed if they are recessed or are protected by close-fitting barriers of insulating material or the equivalent so that contact with wiring installed in the box will not occur.

15.4.3 Terminals that do not project into a box beyond the plane of the front edge of the box may be used.

15.4.4 With reference to 15.4.2, guards provided alongside terminals and extending at least 1/4 inch (6.4 mm) beyond the terminals before wiring, with a corresponding guard between double-pole switching mechanisms, may be used.

AVA Documents
Document Sharing Hub
Full document details: UL 916 2021

15.4.5 To determine whether a construction other than that described in 15.4.4 is such that wiring in the box cannot be forced against live parts or sharp edges, a trial installation using only ordinary care is to be made on an appropriately sized outlet box, employing both copper and aluminum Type TW wire having ampacities in accordance with the rating of the device. The wire is to extend 6 inches (152 mm) inside the box from its point of entrance into the box.

15.5 Portable equipment

15.5.1 Portable equipment shall be provided with a length of flexible cord and an attachment plug for connection to the supply circuit. The type of cord shall comply with the requirements for the application, and the rating of the plug and the ampacity of the cord shall be as specified in 15.2.2.

15.5.2 The attachment plug shall be of the polarized type if the product is not provided with a grounding type attachment plug. See 19.1.1.

15.5.3 All external connection to the equipment shall be by means of a cord and attachment plug.

15.6 Stationary equipment

15.6.1 In determining the compliance of cord and plug connection for stationary equipment, the decision should include consideration of

a) Whether:

1) The cord connection of the equipment facilitates frequent interchange,

2) Reduction of the transmission of noise or vibration is accomplished,

3) The fastening means or mechanical connections are intended to permit removal for maintenance and repair, or

4) All external connections to the equipment are by means of cord and attachment plug, and

b) Whether the equipment is to be connected at the end of the run.

15.6.2 The cord on stationary equipment shall be Type SJ or an equivalent hard-usage cord, not more than 3 feet (914 mm) long, directly connected to the equipment and terminate in an attachment plug. The rating of the plug and the ampacity of the cord shall be as specified in 15.2.2.

15.7 Polarity

15.7.1 Equipment permanently connected electrically and intended to be connected to a supply circuit rated at 125 or 125/250 volts or less and using an Edison screw-shell lampholder or a single-pole switch or overcurrent-protective device other than an automatic control, shall have one terminal or lead identified for connection to the grounded conductor of the supply circuit.

15.7.2 A terminal, lead, or a blade of an attachment plug identified for connection to the grounded supply conductor shall be electrically connected to the screw shell of a lampholder, if provided, and shall not be connected to a single-pole switch or a single-pole overcurrent-protective device.

15.8 Strain relief

15.8.1 Strain relief shall be provided so that mechanical stress on a flexible supply cord will not be transmitted to terminals, splices, or interior wiring.

Documents
Document Sharing Hub
Full document details: UL 916 2021

15.8.2 A strain-relief device shall be subjected to the test described in 57.1.1.

15.8.3 A surface against which a knot in a flexible cord that serves as strain relief may bear or which it may contact shall be free from:

a) Projections,

b) Sharp edges,

c) Burrs,

d) Fins, and

e) Similar features

that may abrade the insulation or conductors.

15.9 Bushings

15.9.1 Where a flexible cord passes or is intended to pass through an opening in a wall, barrier, or enclosing case, there shall be a substantial bushing or the equivalent that is reliably secured in place, and has a smoothly rounded surface against which the cord may bear. An insulating bushing shall be provided for a cord lighter than Type SJ that passes through a wall or barrier of metal if the construction is such that the cord may be subjected to stress or motion.

15.9.2 A cord hole with a smoothly rounded surface through wood, porcelain, phenolic composition, or other acceptable nonconductive material, is considered to be the equivalent of a bushing.

15.9.3 Ceramic materials and some molded compositions may be used for insulating bushings, but a separate bushing of wood or so-called hot-molded shellac and tar composition shall not be used.

15.9.4 A fiber bushing shall not be less than 3/64 inch (1.2 mm) thick, shall be formed and secured in place so that it will not be adversely affected by conditions of ordinary moisture, and shall not be used where it will be subjected to a temperature higher than 90°C (194°F) under normal operating conditions.

15.9.5 A soft-rubber bushing shall not be less than 3/64 inch (1.2 mm) thick and shall be located so that it will not be exposed to oil, grease, oily vapor, or other substance having a deleterious effect on rubber. Such a bushing may be used only in the frame of a motor or for a cord connected to a supply circuit of limited voltage and power. A hole in metal in which a soft-rubber bushing is used shall be free from sharp edges, burrs, projections, and the like, that may cut into the rubber.

15.9.6 Insulating material in an insulated metal grommet used in lieu of an insulating bushing shall not be less than 1/32 inch (0.8 mm) thick and shall completely fill the space between the grommet and the metal in which it is mounted.

16 Current-Carrying Parts

16.1 A current-carrying part shall have the necessary mechanical strength and ampacity for the service, and shall be of metal that complies with the requirements for the application.

16.2 An uninsulated live part, including a terminal, shall be secured to its supporting surface by a method other than friction between surfaces so that it is prevented from turning or shifting in position if such motion may result in reduction of spacings to less than those required by this standard. The security of a contact assembly shall provide for the continued alignment of contacts.

AVA Documents
Document Sharing Hub

Full document details: UL 916 2021