UL 962A

Underwriters Laboratories Inc.

Standard for Safety

Furniture Power Distribution Units

Documents
Document Sharing Hub

Full document details: UL 962A 2008

UL Standard for Safety for Furniture Power Distribution Units, UL 962A

Second Edition, Dated December 22, 2008

Summary of Topics

This revision of UL 962A is being issued to address universal upkeep of UL Standards for Safety. These revisions are considered to be non-substantive and not subject to UL's STP process.

Text that has been changed in any manner or impacted by UL's electronic publishing system is marked with a vertical line in the margin. Changes in requirements are marked with a vertical line in the margin and are followed by an effective date note indicating the date of publication or the date on which the changed requirement becomes effective.

All rights reserved. No part of this publication may be reproduced, stored in a retrieval system, or transmitted in any form by any means, electronic, mechanical photocopying, recording, or otherwise without prior permission of UL.

UL provides this Standard ″as is″ without warranty of any kind, either expressed or implied, including but not limited to, the implied warranties of merchantability or fitness for any purpose.

In no event will UL be liable for any special, incidental, consequential, indirect or similar damages, including loss of profits, lost savings, loss of data, or any other damages arising out of the use of or the inability to use this Standard, even if UL or an authorized UL representative has been advised of the possibility of such damage. In no event shall UL's liability for any damage ever exceed the price paid for this Standard, regardless of the form of the claim.

Users of the electronic versions of UL's Standards for Safety agree to defend, indemnify, and hold UL harmless from and against any loss, expense, liability, damage, claim, or judgment (including reasonable attorney's fees) resulting from any error or deviation introduced while purchaser is storing an electronic Standard on the purchaser's computer system.

The requirements in this Standard are now in effect, except for those paragraphs, sections, tables, figures, and/or other elements of the Standard having future effective dates as indicated in the note following the affected item. The prior text for requirements that have been revised and that have a future effective date are located after the Standard, and are preceded by a ″SUPERSEDED REQUIREMENTS″ notice.

UL COPYRIGHTED MATERIAL –
NOT AUTHORIZED FOR FURTHER REPRODUCTION OR
DISTRIBUTION WITHOUT PERMISSION FROM UL

Documents
Document Sharing Hub

标准分享网 www.bzfxw.com 免费下载

Full document details: UL 962A 2008

No Text on This Page

UL COPYRIGHTED MATERIAL –
NOT AUTHORIZED FOR FURTHER REPRODUCTION OR
DISTRIBUTION WITHOUT PERMISSION FROM UL
Documents
Document Sharing Hub

December 22, 2008
(Title Page Reprinted: October 13, 2009)

1

UL 962A

Standard for Furniture Power Distribution Units

First Edition – September, 2003

Second Edition

December 22, 2008

Comments or proposals for revisions on any part of the Standard may be submitted to UL at any time. Proposals should be submitted via a Proposal Request in UL's On-Line Collaborative Standards Development System (CSDS) at http://csds.ul.com.

UL's Standards for Safety are copyrighted by UL. Neither a printed nor electronic copy of a Standard should be altered in any way. All of UL's Standards and all copyrights, ownerships, and rights regarding those Standards shall remain the sole and exclusive property of UL.

COPYRIGHT © 2009 UNDERWRITERS LABORATORIES INC.

UL COPYRIGHTED MATERIAL –
NOT AUTHORIZED FOR FURTHER REPRODUCTION OR
DISTRIBUTION WITHOUT PERMISSION FROM UL

Documents
Document Sharing Hub

标准分享网 www.bzfxw.com 免费下载

Full document details: UL 962A 2008

No Text on This Page

UL COPYRIGHTED MATERIAL –
NOT AUTHORIZED FOR FURTHER REPRODUCTION OR
DISTRIBUTION WITHOUT PERMISSION FROM UL

Documents
Document Sharing Hub

Full document details: UL 962A 2008

CONTENTS

INTRODUCTION

1 Scope 5
2 Components 6
3 Units of Measurement 6
4 Undated References 6
5 Glossary 6

CONSTRUCTION

6 Enclosure 7
6.1 General 7
6.2 Metallic 7
6.3 Nonmetallic 8
7 Mechanical Assembly 8
8 Accessibility of Live Parts 9
9 Mounting Means 11
10 Corrosion Protection 11
11 Insulating Materials 11
12 Power-Supply Cord 12
12.1 General 12
12.2 Bushings 13
12.3 Strain Relief 13
12.4 Push Back Relief 13
13 Receptacles 14
14 Supplementary Protection 14
15 Switches 16
16 Live Parts 16
17 Internal Wiring 17
18 Spacings 18
19 Printed-Wiring Boards 19
20 Separation of Circuits 19
21 Grounding 19
21.1 General 19
21.2 Bonding 21

PERFORMANCE

22 General 21
23 Temperature Test 22
24 Dielectric Voltage-Withstand Test 24
25 Leakage Current Test 25
25.1 General 25
25.2 Leakage current after humidity conditioning 28
26 Grounding Continuity Test 28
27 Fault Current Test 29
27.1 General 29
27.2 Calibration of test circuits 29
28 Overcurrent Test 30
29 Mounting Hole Barrier Tests 31

UL COPYRIGHTED MATERIAL –
NOT AUTHORIZED FOR FURTHER REPRODUCTION OR
DISTRIBUTION WITHOUT PERMISSION FROM UL
Documents
Document Sharing Hub
标准分享网 www.bzfxw.com 免费下载
Full document details: UL 962A 2008

29.1 General 31
29.2 Mounting hole barrier impact test 32
29.3 Mounting hole barrier probe test 32
30 Strain Relief Test 33
31 Push Back Relief Test 34
32 Impact Tests 34
32.1 General 34
32.2 Drop impact test 35
32.3 Steel sphere impact test 36
32.4 Low-temperature steel sphere impact test 39
33 Crushing Test 39
34 Adequacy of Mounting Test 40
35 Mold Stress-Relief Distortion Test 41
36 Spill Test 42
37 Accessibility Tests 42
37.1 Enclosure accessibility test 42
37.2 Accessibility of live parts test 42
38 Test for Permanence of Cord Tag 44
38.1 General 44
38.2 Test conditions 44
38.3 Test method 45

MANUFACTURING AND PRODUCTION-LINE TESTS

39 Dielectric Voltage-Withstand Test 46
40 Grounding Continuity Test 48

RATINGS

41 Details 48

MARKINGS

42 Details 48

APPENDIX A

Standards for Components A1

UL COPYRIGHTED MATERIAL –
NOT AUTHORIZED FOR FURTHER REPRODUCTION OR
DISTRIBUTION WITHOUT PERMISSION FROM UL
Documents
Document Sharing Hub
Full document details: UL 962A 2008

INTRODUCTION

1 Scope

1.1 These requirements cover cord-connected, indoor use, furniture power distribution units (FPDU) that consist of single or multiple outlet wiring devices that provide power for and are intended to be installed in commercial or household (residential) portable or stationary furnishings only. These units provide outlet receptacle(s) for computers, audio and video equipment, and other equipment that is mounted on or in commercial or household (residential) portable or stationary furnishings. Furniture power distribution units may also be provided with fuses or other supplementary overcurrent protection, switches, suppression components, EMI filters, uninterruptible power supplies, and/or indicator lights in any combination, or connections for cable communications, telephone and/or antenna. FPDUs are intended to be directly connected to a permanently installed branch circuit receptacle. FPDUs are not intended to be series connected (daisy chained) to other FPDUs, relocatable power taps, or to extension cords.

1.2 These requirements cover products rated 250 V AC or less and 16 A AC or less.

1.3 These requirements do not cover products for use in fixed furnishings.

1.4 Furniture power distribution units are not intended to function as general use relocatable power taps.

1.5 A furniture power distribution unit that employs an electromagnetic interference filter shall also comply with the Standard for Electromagnetic Interference Filters, UL 1283.

1.6 A furniture power distribution unit that employs a transient voltage surge suppressor shall also comply with the Standard for Surge Protective Devices, UL 1449.

1.7 Telephone equipment and communication circuit protectors included in a furniture power distribution unit shall comply with the requirements in the Standard for Information Technology Equipment Safety - Part 1: General Requirements , UL 60950-1, and the requirements in the Standard for Secondary Protectors for Communications Circuits, UL 497A, respectively.

1.8 A furniture power distribution unit that incorporates an antenna discharge unit or provides antenna connections to a television, a high-voltage video product, or antenna shall comply with the applicable requirements in the Standard for Antenna-Discharge Units, UL 452, and the Standard for Audio-Video Products and Accessories, UL 1492.

1.9 A cord-connected product that employs ground-fault protection shall comply with the requirements in the Standard for Ground-Fault Circuit Interrupters, UL 943.

1.10 A product that employs an uninterruptible power supply shall comply with the requirements in the Standard for Uninterruptible Power Systems, UL 1778.

UL COPYRIGHTED MATERIAL –
NOT AUTHORIZED FOR FURTHER REPRODUCTION OR
DISTRIBUTION WITHOUT PERMISSION FROM UL

Documents
Document Sharing Hub

标准分享网 www.bzfxw.com 免费下载

Full document details: UL 962A 2008

2 Components

2.1 Except as indicated in 2.2, a component of products covered by this standard shall comply with the requirements for that component. See Appendix A for a list of standards covering components used in the products covered by this standard.

2.2 A component is not required to comply with a specific requirement that:

a) Involves a feature or characteristic not required in the application of the component in the product covered by this standard, or

b) Is superseded by a requirement in this standard.

2.3 A component shall be used in accordance with its rating established for the intended conditions of use.

2.4 Specific components are incomplete in construction features or restricted in performance capabilities. Such components are intended for use only under limited conditions, such as certain temperatures not exceeding specified limits, and shall be used only under those specific conditions.

3 Units of Measurement

3.1 Values stated without parentheses are the requirement. Values in parentheses are explanatory or approximate information.

3.2 Unless otherwise indicated, all voltage and current values mentioned in this standard are root-mean-square (rms).

4 Undated References

4.1 Any undated reference to a code or standard appearing in the requirements of this standard shall be interpreted as referring to the latest edition of that code or standard.

5 Glossary

5.1 For the purpose of this standard the following definitions apply.

5.2 FIXED FURNISHING – A furnishing that is provided with a means for permanent connection to the power supply and is not intended to be moved.

5.3 FURNITURE POWER DISTRIBUTION UNIT (FPDU) – A furniture power distribution unit consists of an attachment plug cap and a length of flexible cord terminated in an enclosure in which are mounted one or more receptacles. This unit is able to include power, phone, data, or video connectors. These units provide outlet receptacle(s) for computers, audio and video equipment, and other equipment. They may also be provided with fuses or other supplementary overcurrent protection, switches, suppression components, EMI filters, uninterruptible power supplies, and/or indicator lights in any combination, or connections for cable communications, telephone and/or antenna.

5.4 OVERCURRENT PROTECTION (OCP) DEVICE – A supplementary protection device provided within a furniture power distributions unit that provides overcurrent and short-circuit protection. It is not intended to be a substitute for branch circuit protection.

UL COPYRIGHTED MATERIAL –
NOT AUTHORIZED FOR FURTHER REPRODUCTION OR
DISTRIBUTION WITHOUT PERMISSION FROM UL
Documents
Document Sharing Hub
Full document details: UL 962A 2008

5.5 PORTABLE FURNISHING – A cord-connected furnishing capable of being easily moved by hand from place to place in normal use.

5.6 STATIONARY FURNISHING – A cord-connected furnishing that is intended to be fastened in place or located in a dedicated space.

5.7 SUPPLEMENTARY PROTECTION DEVICE – A device intended for use as overcurrent, over-temperature, or over- or under-voltage protection within a FPDU where branch circuit overcurrent protection is already provided.

CONSTRUCTION

6 Enclosure

6.1 General

6.1.1 The enclosure shall be formed and assembled so that it has the strength and rigidity required to resist the abuses to which it is subjected, without resulting in a risk of fire, electric shock, or injury to persons, due to total or partial collapse with resulting reduction of spacings, loosening or displacement of parts or other serious defects.

6.1.2 An opening in an enclosure shall have such size and shape - or shall be so covered by screening or barrier or by an expanded, perforated, or louvered panel - that a test rod having a maximum diameter of 1/16 in (1.6 mm) shall be prevented from contacting live parts. See Accessibility Test, Section 37.

6.1.3 A keyhole slot, notch, or similar means for mounting, when provided, shall be located so that the supporting screws or the like cannot damage any electrical insulation or reduce spacings to live parts.

6.1.4 A barrier that covers a mounting hole and thereby forms part of the required enclosure shall be subjected to the Mounting Hole Barrier Tests, Section 37.

6.2 Metallic

6.2.1 A metal enclosure of a FPDU shall have a minimum thickness in accordance with Table 6.1.

UL COPYRIGHTED MATERIAL –
NOT AUTHORIZED FOR FURTHER REPRODUCTION OR
DISTRIBUTION WITHOUT PERMISSION FROM UL

Documents
Document Sharing Hub

标准分享网 www.bzfxw.com 免费下载

Full document details: UL 962A 2008

Table 6.1
Minimum thicknesses of enclosure metal

Metal	At small, flat unreinforced surfaces and at surfaces of a shape or size to provide adequate mechanical strength		At relatively larger unreinforced flat surfaces	
	inch	(mm)	inch	(mm)
Die-cast metal	3/64	1.2	5/64	2.0
Cast malleable iron	1/16	1.6	3/32	2.4
Other cast metal	3/32	2.4	1/8	3.2
Uncoated sheet steel	0.026	0.66	0.026	0.66
Galvanized sheet steel	0.029	0.74	0.029	0.74
Nonferrous sheet metal	0.036	0.91	0.036	0.91

6.3 Nonmetallic

6.3.1 A polymeric enclosure of a FPDU for use in a portable furnishing shall comply with the flammability requirements in the Standard for Polymeric Materials – Use in Electrical Equipment Evaluations, UL 746C, for non-attended, non-intermittent duty portable equipment and shall be marked in accordance with 42.15.

6.3.2 A polymeric enclosure of a FPDU for use in a stationary furnishing shall comply with the flammability requirements in the Standard for Polymeric Materials – Use in Electrical Equipment Evaluations, UL 746C, for stationary equipment.

6.3.3 The enclosure shall comply with the strain relief, impact, crush and mold stress-relief test requirements of Sections 30, 32, 33 and 35 respectively, of this standard.

7 Mechanical Assembly

7.1 A FPDU shall be formed and assembled so as to reduce the risk of contact with any sharp edges, fins, burrs or the like that are capable of increasing the risk of injury to persons, or abrade the insulation on conductors or otherwise damage wires.

7.2 A switch, a lampholder, a power-supply cord and its strain-relief bushing, receptacle, or similar component shall be mounted securely and, except as noted in 7.3 and 7.4, shall be restrained from turning. See 7.5.

7.3 The requirement that a switch be restrained from turning is capable of being waived when all of the following conditions are met:

a) The switch is to be of the plunger or other type whose actuator does not tend to rotate when operated (the actuator of a toggle or rocker switch is considered to be subject to forces that tend to turn the switch during operation of the switch).

b) The means of mounting the switch makes it unlikely that operation of the switch loosens it.

c) The spacings are not to be reduced below the minimum acceptable values when the switch rotates.

UL COPYRIGHTED MATERIAL –
NOT AUTHORIZED FOR FURTHER REPRODUCTION OR
DISTRIBUTION WITHOUT PERMISSION FROM UL
Documents
Document Sharing Hub
Full document details: UL 962A 2008

7.4 A lampholder of a type in which the lamp is not intended to be replaced, such as a neon pilot or indicator light in which the lamp is sealed in a nonremovable jewel, is not required to be restrained from turning when the rotation is not capable of reducing spacings below the minimum acceptable values.

7.5 The means by which the turning specified in 7.2 is prevented is to include more than friction between surfaces. For example, a lockwasher, properly applied, is not prohibited from being used as a means to restrain turning of a device having a single-hole mounting means.

8 Accessibility of Live Parts

8.1 The electrical parts of a FPDU that do not require use of a tool for access shall be located or enclosed so that persons are protected against inadvertent contact with uninsulated live parts and film-coated magnet wire.

8.2 An opening in the enclosure of a FPDU is not prohibited when an uninsulated live part or film-coated magnet wire is not capable of being contacted by the probe shown in Figure 8.1. The probe shall be applied to any depth that the opening permits, and shall be rotated or angled before, during, and after insertion through the opening to any position that is required to examine the enclosure. The probe shall be applied in any possible configuration; and, when required, the configuration shall be changed after insertion through the opening.

8.3 The probe shall be used as a measuring instrument to evaluate the accessibility provided by an opening, and not as an instrument to evaluate the strength of a material; it shall be applied with the minimum force required to determine accessibility in accordance with the Accessibility Test, Section 37.

UL COPYRIGHTED MATERIAL –
NOT AUTHORIZED FOR FURTHER REPRODUCTION OR
DISTRIBUTION WITHOUT PERMISSION FROM UL
Documents
Document Sharing Hub
标准分享网 www.bzfxw.com 免费下载
Full document details: UL 962A 2008

Figure 8.1
Accessibility probe

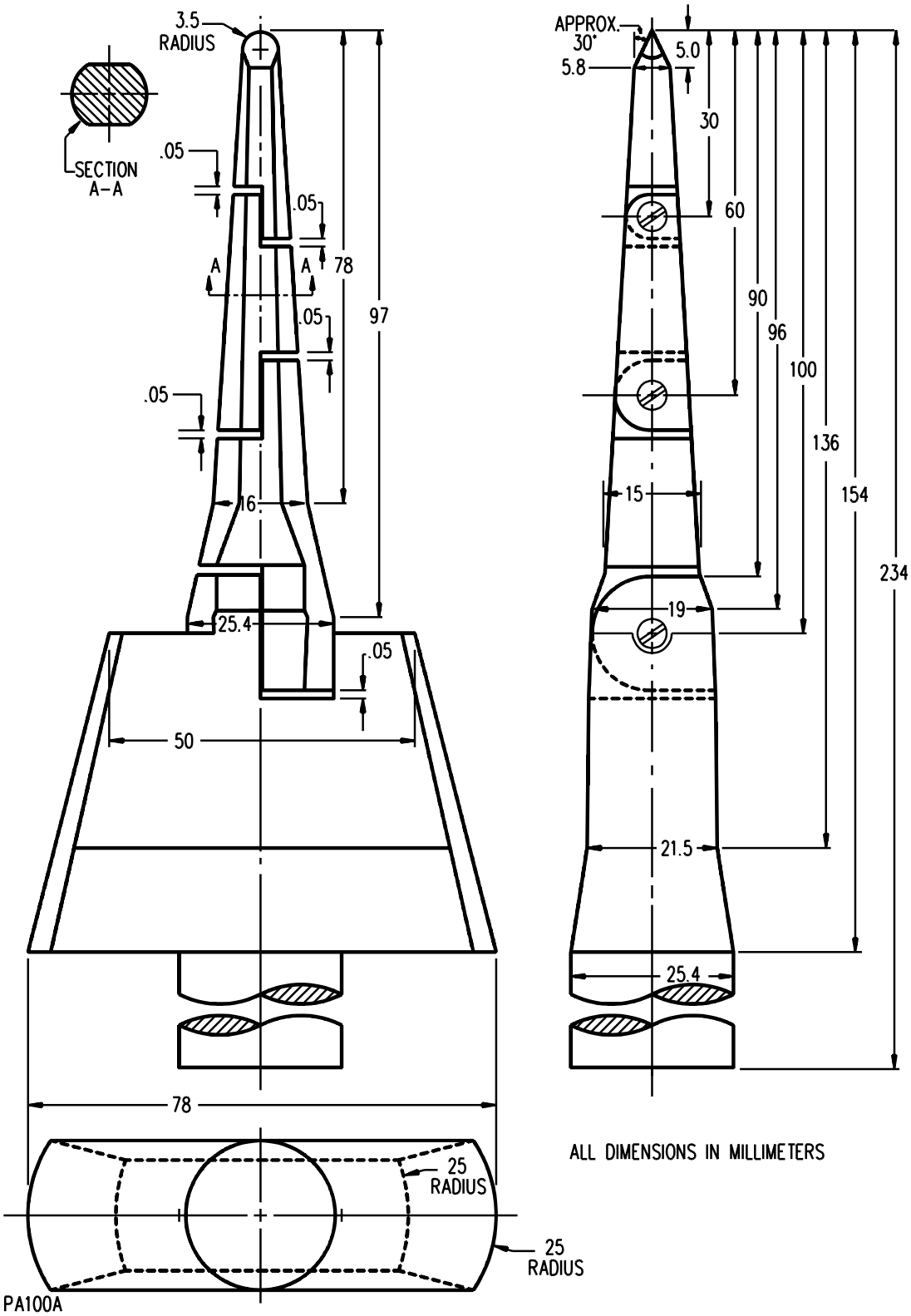

UL COPYRIGHTED MATERIAL –
NOT AUTHORIZED FOR FURTHER REPRODUCTION OR
DISTRIBUTION WITHOUT PERMISSION FROM UL

Documents
Document Sharing Hub

9 Mounting Means

9.1 A FPDU shall be provided with a mounting means.

9.2 The mounting means shall comply with Section 30, Mounting Hole Barrier Test, and Section 35, Adequacy of Mounting Test.

9.3 Adhesive may be used to secure a FPDU when the adhesive complies with the Specialized Applications – General Adhesives, Functional Analysis, and Program of Investigation for Adhesives in the Standard for Polymeric Materials – Use in Electrical Equipment Evaluations, UL 746C. When performing the adhesive investigations, the maximum force for the Program of Investigation – End-Product Evaluation of UL 746C shall be the weight of the FPDU. When a suitable adhesive is used to mount the FPDU, the Adequacy of Mounting test is not required to be conducted.

10 Corrosion Protection

10.1 Iron and steel parts or other parts not inherently corrosion resistant shall be protected against corrosion by painting, enameling, galvanizing, plating, or other equivalent means.

Exception: This requirement does not apply to minor parts of iron or steel, such as washers, screws and the like that are not in the grounding conductor path.

11 Insulating Materials

11.1 A barrier or integral part, such as an insulating washer or bushing, and a base or support for the mounting of live parts, shall be of a moisture-resistant material that will not be damaged by the temperature and stresses to which it will be subjected under conditions of actual use.

11.2 An insulating material is to be investigated with regard to its acceptability for the application in accordance with the Standard for Polymeric Materials – Use in Electrical Equipment Evaluations, UL 746C. Materials, such as mica, ceramic, or some molded compounds are capable of being used as the sole support of live parts. When it is required to investigate a material to determine its acceptability, consideration is to be given to such factors as its mechanical strength, resistance to ignition sources, dielectric strength, insulation resistance, and heat-resistant properties in both the aged and unaged conditions, the degree to which it is enclosed, and any other features affecting the risk of fire and electric shock.

11.3 Vulcanized fiber, industrial laminates, polymeric films or similar materials are capable of being used for insulating bushings, washers, separators, and barriers, but not as sole support for uninsulated live parts. Hard rubber is not to be used.

Exception: Industrial laminates that have been investigated for the purpose are capable of being used as sole support for uninsulated live parts.

UL COPYRIGHTED MATERIAL –
NOT AUTHORIZED FOR FURTHER REPRODUCTION OR
DISTRIBUTION WITHOUT PERMISSION FROM UL
Documents
Document Sharing Hub
标准分享网 www.bzfxw.com 免费下载
Full document details: UL 962A 2008

12 Power-Supply Cord

12.1 General

12.1.1 The power-supply cord shall be of the grounding type and shall employ one of the following flexible cord Types: SJ, SJE, SJO, SJT, SJTO, or equivalent.

Exception: SPT-3 is not prohibited from being used on a FPDU rated 12 A or less when marked in accordance with 42.14.

12.1.2 A detachable power-supply cord shall not be used.

12.1.3 The minimum conductor size of the power-supply cord shall be as indicated in Table 12.1.

12.1.4 The length of a power-supply cord – as measured from the outside surface of the enclosure of the FPDU to the plane of the face of the attachment plug – shall not exceed 25 ft (7.6 m) nor be less than 3 ft (0.9 m).

12.1.5 A power-supply cord shall have a voltage rating not less than the rated voltage of the FPDU and have an ampacity not less than the current rating of the FPDU.

Table 12.1
Guide to construction and performance requirements for furniture power distribution units

FPDU rating (A)	Minimum power cord size (AWG)	Number of receptacles	Supplementary OCP required?	Supplementary OCP rating[a] (A)	Temperature test load (A)	Minimum internal wiring size[b] (AWG)
13 – 16	12	<6	NO	20[c]	20	12
13 – 16	12	≥6	YES	20	20	12
12	14	<4	NO	15[c]	15	14
12	14	≥4	YES[g, h]	15	15	14
<12	14	<4	NO	15[c,d]	15[e,f]	14
<12	14	≥4	YES	15[d]	OCP[f]	14

[a] OCP shall not trip when the FPDU is operated at the FPDU marked rated current.

[b] Smaller AWG is not prohibited from being used when an OCP is provided and the results of the Temperature Test (Section 23), the Fault Current Test (Section 27), and the Overcurrent Test (Section 28) comply with the requirements of those tests using the smaller AWG wire.

[c] When provided with an OCP.

[d] Maximum rating. An OCP rated less than 12 A and not less than the FPDU rating complies with the intent of this requirement. See note (a) above.

[e] Test is capable of being conducted at OCP rating when provided.

[f] When the OCP rating is greater than the FPDU rating, conduct the Temperature Test at the OCP rating. The OCP is not prohibited from being bypassed when nuisance tripping occurs. See 23.3.

[g] An OCP is not required for a 12 A FPDU with four receptacles as long as:

a) Internal wiring is 12 AWG;

b) The power-supply cord is 12 AWG;

c) All other components are evaluated for use at 20 A; and

d) The Temperature Test load is 20 A.

UL COPYRIGHTED MATERIAL –
NOT AUTHORIZED FOR FURTHER REPRODUCTION OR
DISTRIBUTION WITHOUT PERMISSION FROM UL

Table 12.1 Continued on Next Page

Documents
Document Sharing Hub
Full document details: UL 962A 2008

Table 12.1 Continued

FPDU rating (A)	Minimum power cord size (AWG)	Number of receptacles	Supplementary OCP required?	Supplementary OCP rating[a] (A)	Temperature test load (A)	Minimum internal wiring size[b] (AWG)
[h]An OCP is not required for a household (residential) 12 A FPDU with four receptacles and 16 AWG power supply cord as long as: a) Internal wiring is 16 AWG; b) The power-supply cord is 16 AWG; c) All other components are evaluated for use at 15 A; d) The Temperature Test load is 15 A. e) The FPDU is marked in accordance with 42.16.						

12.1.6 The power-supply cord shall not include a through-cord switch.

12.2 Bushings

12.2.1 Where the power-supply cord passes through an opening in the enclosure, a smooth, well-rounded surface shall be provided to protect the cord from damage.

12.3 Strain Relief

12.3.1 Strain relief shall be provided so that a mechanical stress on a power-supply cord is not transmitted to terminals, splices, or interior wiring. See Strain Relief Test, Section 30.

12.3.2 The strain relief means shall not damage the insulation or cord jacket. The normal compressive deformation inherent in providing strain relief is not considered to be damage.

12.4 Push Back Relief

12.4.1 Means shall be provided to prevent the supply cord or lead from being pushed into the enclosure of an appliance through the cord-entry hole when such displacement results in:

a) Subjecting the supply cord or lead to mechanical damage;

b) Exposing the supply cord or lead to a temperature higher than that for which it is rated;

c) Reducing spacings (such as to a metal strain-relief clamp) below the minimum required values; or

d) Damaging internal connections or components.

To determine compliance, the supply cord or lead shall be tested in accordance with Section 31, Push Back Relief Test.

UL COPYRIGHTED MATERIAL –
NOT AUTHORIZED FOR FURTHER REPRODUCTION OR
DISTRIBUTION WITHOUT PERMISSION FROM UL
Documents
Document Sharing Hub
标准分享网 www.bzfxw.com 免费下载
Full document details: UL 962A 2008

13 Receptacles

13.1 The receptacle outlets of a FPDU shall have a current rating of 15 or 20 A and a voltage rating of 125 or 250 V. The contact components of a receptacle shall have a voltage and current rating equal to that of the attachment plug on the power-supply cord.

Exception: A 15 A receptacle is not prohibited from being used with a FPDU rated 16 A with a 20 A attachment plug.

13.2 All of the receptacle outlets of a FPDU shall have the same current rating and shall be of the grounding type. They are not prohibited from being of the same or different slot configurations (locking and non-locking).

13.3 The receptacle outlets of a FPDU shall comply with the applicable requirements in the Standard for Attachment Plugs and Receptacles, UL 498. The grounding contact of the receptacle shall comply with the requirements of the Grounding Contact Test in UL 498.

13.4 The receptacle outlets of a FPDU that also incorporates terminals for coaxial cable (TV/CATV) connection shall be marked in accordance with 42.13.

13.5 A FPDU intended to be mounted on or inside a desk or similar furnishing surface shall be covered or otherwise protected from spillage while not in use and shall comply with the Spill Test, Section 36.

Exception: When the intended use of the FPDU is for it to be mounted above the furnishing surface and oriented such that spilled liquid on the furnishing surface cannot enter any part of the FPDU, these requirements do not apply.

13.6 A FPDU shall be provided with a maximum of eight receptacles.

Exception: A FPDU is able to be provided with more than eight receptacles when the FPDU is provided with a circuit breaker that complies with the requirements in the Standard for Molded-Case Circuit Breakers, Molded-Case Switches and Circuit-Breaker Enclosures, UL 489, and is in accordance with the National Electrical Code, ANSI/NFPA 70 branch circuit protection.

14 Supplementary Protection

14.1 A FPDU shall be provided with supplementary overcurrent protection as indicated in Table 12.1.

14.2 A supplementary protection device shall not open during the Temperature Test, Section 23.

14.3 A supplementary overcurrent protection device shall be capable of clearing a fault current of not less than that indicated in Table 14.1 and shall comply with the requirements in the Standard for Supplementary Protectors for Use in Electrical Equipment, UL 1077. The supplementary overcurrent protection device shall have been subjected to the Overload Test in UL 1077, tested for motor starting at 6 times the AC full load current rating.

Exception No. 1: A fuse that is capable of clearing a fault current of not less than that indicated in Table 14.1, and that complies with the requirements in the Standard for Low-Voltage Fuses – Part 14: Supplemental Fuses, UL 248-14, is not prohibited from being used as a supplementary overcurrent protection device.

UL COPYRIGHTED MATERIAL –
NOT AUTHORIZED FOR FURTHER REPRODUCTION OR
DISTRIBUTION WITHOUT PERMISSION FROM UL
Documents
Document Sharing Hub
Full document details: UL 962A 2008