UL 962A

STANDARD FOR SAFETY

Furniture Power Distribution Units

Documents
Document Sharing Hub

Full document details: UL 962A 2024

Documents
Document Sharing Hub

Full document details: UL 962A 2024

UL Standard for Safety for Furniture Power Distribution Units, UL 962A

Sixth Edition, Dated July 13, 2023

Summary of Topics

This revision of ANSI/UL 962A dated October 10, 2024 includes the following changes in requirements:

– Class 2 Markings Alignment with UL 1310; 53.25

Text that has been changed in any manner or impacted by ULSE's electronic publishing system is marked with a vertical line in the margin.

The revised requirements are substantially in accordance with Proposal(s) on this subject dated June 21, 2024 and September 6, 2024.

All rights reserved. No part of this publication may be reproduced, stored in a retrieval system, or transmitted in any form by any means, electronic, mechanical photocopying, recording, or otherwise without prior permission of ULSE Inc. (ULSE).

ULSE provides this Standard "as is" without warranty of any kind, either expressed or implied, including but not limited to, the implied warranties of merchantability or fitness for any purpose.

In no event will ULSE be liable for any special, incidental, consequential, indirect or similar damages, including loss of profits, lost savings, loss of data, or any other damages arising out of the use of or the inability to use this Standard, even if ULSE or an authorized ULSE representative has been advised of the possibility of such damage. In no event shall ULSE's liability for any damage ever exceed the price paid for this Standard, regardless of the form of the claim.

Users of the electronic versions of UL's Standards for Safety agree to defend, indemnify, and hold ULSE harmless from and against any loss, expense, liability, damage, claim, or judgment (including reasonable attorney's fees) resulting from any error or deviation introduced while purchaser is storing an electronic Standard on the purchaser's computer system.

Documents
Document Sharing Hub

Full document details: UL 962A 2024

No Text on This Page

Documents
Document Sharing Hub

Full document details: UL 962A 2024

JULY 13, 2023
(Title Page Reprinted: October 10, 2024)

ANSI/UL 962A-2024

UL 962A

Standard for Furniture Power Distribution Units

First Edition – September, 2003
Second Edition – December, 2008
Third Edition – September, 2014
Fourth Edition – February, 2016
Fifth Edition – June, 2018

Sixth Edition

July 13, 2023

This ANSI/UL Standard for Safety consists of the Sixth Edition including revisions through October 10, 2024.

The most recent designation of ANSI/UL 962A as an American National Standard (ANSI) occurred on October 10, 2024. ANSI approval for a standard does not include the Cover Page, Transmittal Pages, and Title Page.

Comments or proposals for revisions on any part of the Standard may be submitted to ULSE at any time. Proposals should be submitted via a Proposal Request in ULSE's Collaborative Standards Development System (CSDS) at https://csds.ul.com.

Our Standards for Safety are copyrighted by ULSE Inc. Neither a printed nor electronic copy of a Standard should be altered in any way. All of our Standards and all copyrights, ownerships, and rights regarding those Standards shall remain the sole and exclusive property of ULSE Inc.

© 2024 ULSE Inc. All rights reserved.

Documents
Document Sharing Hub

Full document details: UL 962A 2024

No Text on This Page

Documents
Document Sharing Hub

Full document details: UL 962A 2024

CONTENTS

INTRODUCTION

1 Scope 9
2 Components 10
3 Use 10
4 Units of Measurement 10
5 Referenced Publications 10
6 Glossary 13

CONSTRUCTION

7 Enclosure 15
7.1 General 15
7.2 Metallic 16
7.3 Nonmetallic 17
8 Mechanical Assembly 17
9 Enclosure Accessibility and Accessibility of Live Parts 18
10 Mounting Means 21
11 Corrosion Protection 21
12 Insulating Materials 21
13 Power-Supply Cord 21
13.1 General 21
13.2 Class 2 lead 23
13.3 Bushings 23
13.4 Strain relief 23
13.5 Push back relief 23
14 Receptacles 24
15 Current Tap 25
16 Supplementary Overcurrent Protection 25
17 Switches 26
18 Live Parts 27
19 Internal Wiring 27
20 Spacings 28
21 Clearance and Creepage Distances – Isolated Secondary Circuits 29
22 Printed-Wiring Boards 30
23 Separation of Circuits 30
24 Low Voltage Charging and Isolated Secondary Output Circuits 30
25 Grounding 31
25.1 General 31
25.2 Bonding 32
26 Low Voltage Charging and Isolated Secondary Output Circuits 33

PERFORMANCE

27 General 33
28 Motorized or Self-Propelled Movable Parts 33
29 Temperature Test 34
30 Dielectric Voltage-Withstand Test 35
31 Leakage Current Test 36
31.1 General 36
31.2 Leakage current after humidity conditioning 38
32 Grounding Continuity Test 38
33 Fault Current Test 39

AVA Documents
Document Sharing Hub
Full document details: UL 962A 2024

33.1 General....39
33.2 Calibration of test circuits....39
34 Overcurrent Test....40
35 Mounting Hole Barrier Tests....41
35.1 General....41
35.2 Mounting hole barrier impact test....41
35.3 Mounting hole barrier probe test....42
36 Strain Relief Test....43
37 Push Back Relief Test....43
38 Impact Tests....44
38.1 General....44
38.2 Drop impact test....45
38.3 Steel sphere impact test....45
38.4 Low-temperature steel sphere impact test....47
38.5 Supplementary overcurrent protector check test....47
39 Crushing Test....47
40 Adequacy of Mounting Test....48
41 Retractable Force Test....49
42 Mold Stress-Relief Distortion Test....49
43 Spill Test....50
44 Accessibility Tests....52
44.1 Enclosure accessibility test....52
44.2 Accessibility of live parts test....52
45 Test for Permanence of Cord Tag....53
45.1 General....53
45.2 Test conditions....53
45.3 Test method....54
46 Pinch Force Evaluation Test....55
47 Normal Operation Test....55
48 Cycling Test....55
49 Flexing Endurance Test....56

MANUFACTURING AND PRODUCTION-LINE TESTS

50 Dielectric Voltage-Withstand Test....57
51 Grounding Continuity Test....58

RATINGS

52 Details....59

MARKINGS

53 Details....59

INSTRUCTIONS

54 Details....62

ANNEX A (normative) – FURNITURE POWER DISTRIBUTION UNITS INCORPORATING BATTERIES

INTRODUCTION

A1 Scope....63

Documents
Document Sharing Hub
Full document details: UL 962A 2024

A2 Glossary....63
A3 General....63
A4 Battery Chargers and Circuits....64

CONSTRUCTION

A5 Batteries....64
A5.1 General....64
A5.2 Non-replaceable batteries....64
A5.3 Technician replaceable batteries....64
A5.4 User replaceable batteries....64
A5.5 Battery packs....65
A5.6 Lithium-ion battery cells or packs....65
A6 Battery Compartments....65
A7 Battery Circuits....66
A8 Battery Charging....66

PERFORMANCE

A9 Temperature Test....66
A9.1 General....66
A9.2 Temperature test method I....67
A9.3 Temperature test method II....67
A9.4 Temperature test method III....67
A10 Discharge Test....67
A11 Lithium-ion Batteries....68
A11.1 Lithium-ion battery abnormal tests....68
A11.2 Impact tests....69
A12 Markings....69
A13 Installation and Operation Instructions....69

ANNEX B (normative) – FURNITURE POWER DISTRIBUTION UNITS FOR CLUSTERED SEATING

INTRODUCTION

B1 Scope....71
B2 Glossary....71
B3 General....72
B4 Use....72

CONSTRUCTION

B5 General....73
B6 Enclosure....74
B6.1 Nonmetallic....74
B6.2 Metallic....74
B7 Enclosure Accessibility and Accessibility of Live Parts....75
B8 Mounting Means....76
B9 Power-Supply and Interconnecting Cords....76
B9.1 General....76
B9.2 Power-supply cord....77
B9.3 Interconnecting cords....77
B9.4 Interconnection plugs and cord connectors....77
B9.5 Interconnection inlet and outlet....77
B9.6 Bushings....78

Documents
Document Sharing Hub
Full document details: UL 962A 2024

B10 Supplementary Overcurrent Protection 78
B10.1 General 78
B10.2 Primary supplementary overcurrent protection 78
B10.3 Subordinate supplementary overcurrent protection 78
B11 Internal Wiring 79
B12 Receptacles for Connection to Utilization Equipment 79

PERFORMANCE

B13 General 80
B14 Temperature Test 80
B15 Fault Current Test 80
B15.1 General 80
B16 Adequacy of Mounting Test 80
B16.1 Static mechanical load test 80
B16.2 Abrupt pull test 80
B17 Spill Test 83
B18 Latching Test 84

MARKINGS

B19 Details 84

INSTRUCTIONS

B20 Details 84

ANNEX C (normative) – FURNITURE POWER DISTRIBUTION UNITS FOR KITCHEN AND BATHROOM COUNTERTOPS

INTRODUCTION

C1 Scope 86
C2 Glossary 86
C3 General 87

CONSTRUCTION

C4 General 87

PERFORMANCE

C5 General 87
C6 Mechanical Endurance Test 87
C7 Kitchen and Bathroom Countertop Spill Test 88

MARKINGS

C8 General 88

ANNEX D (normative) – FURNITURE POWER DISTRIBUTION UNITS FOR PORTABLE (MOVABLE) WORK SPACE TABLES

Documents
Document Sharing Hub
Full document details: UL 962A 2024

INTRODUCTION

D1 Scope 89
D2 Glossary 89
D3 General 90
D4 Use 90

CONSTRUCTION

D5 General 91
D6 Enclosure 94
D6.1 Nonmetallic 94
D6.2 Metallic 94
D7 Enclosure Accessibility and Accessibility of Live Parts 94
D8 Mounting Means 95
D9 Power-Supply and Interconnecting Cords 96
D9.1 General 96
D9.2 Power-supply cord 96
D9.3 Interconnecting cords 96
D9.4 Interconnection plugs and cord connectors 98
D9.5 Interconnecting inlet and outlet 98
D9.6 Bushings 98
D10 Supplementary Overcurrent Protection 99
D10.1 General 99
D10.2 Primary supplementary overcurrent protection 99
D10.3 Subordinate supplementary overcurrent protection 99
D11 Internal Wiring 99
D12 Receptacles for Connection to Utilization Equipment 99

PERFORMANCE

D13 General 100
D14 Temperature Test 100
D15 Fault Current Test 101
D15.1 General 101
D16 Adequacy of Mounting Test 101
D16.1 Static mechanical load test 101
D16.2 Abrupt pull test 101
D16.3 Clamp-Mounted FPDU Test 103
D17 Spill Test 104
D18 Latching Test 104

MARKINGS

D19 Details 105

INSTRUCTIONS

D20 Details 106

ANNEX E (informative) – STANDARDS FOR COMPONENTS

Documents
Document Sharing Hub
Full document details: UL 962A 2024

No Text on This Page

Documents
Document Sharing Hub

Full document details: UL 962A 2024

INTRODUCTION

1 Scope

1.1 These requirements cover indoor use cord and plug connected of permanently connected, furniture power distribution units (FPDU) rated 250 V AC or less and 20 Amperes or less. An FPDU may provide one or more receptacle outlets, inclusive of one current tap integral to the attachment plug, if provided, for connection of utilization equipment. An FPDU may include an integral Class 2 power supply employing integral output lead(s) and/or output connector(s) and may include receptacles with integral power supplies employing Class 2 output connector(s). FPDU's are for fixed mounting to portable or stationary furnishings as a power supply connection for cord and plug connected electrical utilization equipment in accordance with the National Electrical Code, NFPA 70.

1.2 In accordance with the National Electrical Code, NFPA 70, furniture power distribution units (FPDUs) shall not serve as fixed wiring of a structure or of fixed furnishings, such as but not limited to applications in permanent countertops of kitchens and bathrooms.

1.3 A cord-and-plug-connected product as described in 1.1 with less than three receptacle outlets and provided with a Luminaire is covered under the Standard for Portable Electric Luminaires, UL 153.

1.4 A cord-and-plug-connected product as described in 1.1 with less than three receptacle outlets and that employs an electromagnetic interference filter is covered under the Standard for Electromagnetic Interference Filters, UL 1283.

1.5 A cord-and-plug-connected product as described in 1.1 with less than three receptacle outlets and that employs a surge protective device (SPD) is covered under the Standard for Surge Protective Devices, UL 1449, for SPD Type 3.

1.6 A cord-and-plug-connected product as described in 1.1 that employs ground-fault protection is covered under the requirements for portable GFCIs in the Standard for Ground-Fault Circuit Interrupters, UL 943.

1.7 This standard does not cover FPDUs intended for use with medical equipment.

1.8 These requirements cover FPDUs provided with isolated secondary circuits.

1.9 These requirements cover FPDUs provided with batteries located in isolated secondary circuits.

1.10 A product that has a battery backup feature or other uninterruptible power supply equipment located in the Primary Circuit shall comply with the applicable requirements in the Standard for Uninterruptible Power Supply Equipment, UL 1778.

1.11 A FPDU with three or more receptacle outlets may employ a Light Emitting Diode (LED) Luminaire.

1.12 This standard contains the following Annexes:

a) Annex A – Furniture Power Distribution Units Incorporating Batteries.

b) Annex B – Furniture Power Distribution Units for Clustered Seating.

c) Annex C – Furniture Power Distribution Units for Kitchen and Bathroom Countertops.

d) Annex D – Furniture Power Distribution Units for Portable (Movable) Work Space Tables.

AVA Documents
Document Sharing Hub
Full document details: UL 962A 2024

2 Components

2.1 Except as indicated in 2.2, a component of products covered by this standard shall comply with the requirements for that component. See Annex E for a list of standards covering components used in the products covered by this standard.

2.2 A component is not required to comply with a specific requirement that:

a) Involves a feature or characteristic not required in the application of the component in the product covered by this standard, or

b) Is superseded by a requirement in this standard.

2.3 A component shall be used in accordance with its rating established for the intended conditions of use.

2.4 Specific components are incomplete in construction features or restricted in performance capabilities. Such components are intended for use only under limited conditions, such as certain temperatures not exceeding specified limits, and shall be used only under those specific conditions.

2.5 A FPDU that incorporates a LED Luminaire and LED components and subassemblies shall comply with the applicable requirements of UL 8750.

3 Use

3.1 A FPDU is intended to be connected to a permanently installed branch circuit receptacle outlet.

3.2 A FPDU is intended to be mounted to an indoor use portable or stationary furnishing. A FPDU is not intended to serve as fixed wiring of a structure or of fixed furnishings.

3.3 FPDU are not intended to be series connected (daisy chained) to other FPDUs to relocatable power taps or to extension cords.

4 Units of Measurement

4.1 Values stated without parentheses are the requirement. Values in parentheses are explanatory or approximate information.

4.2 Unless otherwise indicated, all voltage and current values mentioned in this standard are root-mean-square (rms).

5 Referenced Publications

5.1 Any undated reference to a code or standard appearing in the requirements of this standard shall be interpreted as referring to the latest edition of that code or standard.

5.2 The following publications are referenced in this Standard:

ASTM E230/E230M, *Standard Specification and Temperature-Electromotive Force (emf) Tables for Standardized Thermocouples*

ASTM G155, *Standard Practice for Operating Xenon Arc Light Apparatus for Exposure of Non-Metallic Materials*

AVA Documents
Document Sharing Hub

Full document details: UL 962A 2024

NEMA WD6, *Wiring Devices – Dimensional Specifications*

NFPA 70, *National Electrical Code*

UL 13, *Power-Limited Circuit Cables*

UL 20, *General-Use Snap Switches*

UL 44, *Thermoset-Insulated Wires and Cables*

UL 50E, *Enclosures for Electrical Equipment, Environmental Considerations*

UL 62, *Flexible Cords and Cables*

UL 83, *Thermoplastic-Insulated Wires and Cables*

UL 94, *Tests for Flammability of Plastic Materials for Parts in Devices and Appliances*

UL 153, *Portable Electric Luminaires*

UL 157, *Gaskets and Seals*

UL 244A, *Solid-State Controls for Appliances*

UL 248-14, *Low-Voltage Fuses – Part 14: Supplemental Fuses*

UL 325, *Door, Drapery, Gate, Louver, and Window Operators and Systems*

UL 452, *Antenna-Discharge Units*

UL 467, *Grounding and Bonding Equipment*

UL 486C, *Splicing Wire Connectors*

UL 489, *Molded-Case Circuit Breakers, Molded-Case Switches and Circuit-Breaker Enclosures*

UL 497A, *Secondary Protectors for Communications Circuits*

UL 498, *Attachment Plugs and Receptacles*

UL 746C, *Polymeric Materials – Use in Electrical Equipment Evaluations*

UL 758, *Appliance Wiring Material*

UL 796, *Printed Wiring Boards*

UL 817, *Cord Sets and Power Supply Cords*

UL 840, *Insulation Coordination Including Clearance and Creepage Distances for Electrical Equipment*

UL 917, *Clock-Operated Switches*

Documents
Document Sharing Hub

Full document details: UL 962A 2024

UL 943, *Ground-Fault Circuit Interrupters*

UL 969, *Marking and Labeling Systems*

UL 969A, *Marking and Labeling Systems – Flag Labels, Flag Tags, Wrap-Around Labels and Related Products*

UL 1004-1, *Rotating Electrical Machines – General Requirements*

UL 1077, *Supplementary Protectors for Use in Electrical Equipment*

UL 1283, *Electromagnetic Interference Filters*

UL 1310, *Class 2 Power Units*

UL 1439, *Tests for Sharpness of Edges on Equipment*

UL 1449, *Surge Protective Devices*

UL 1492, *Audio-Video Products and Accessories*

UL 1642, *Lithium Batteries*

UL 1778, *Uninterruptible Power Supply Equipment*

UL 1977, *Component Connectors for Use in Data, Signal, Control and Power Applications*

UL 1989, *Valve Regulated or Vented Batteries with Aqueous Electrolytes*

UL 2054, *Household and Commercial Batteries*

UL 2238, *Cable Assemblies*

UL 2738, *Induction Power Transmitters and Receivers for Use with Low Energy Products*

UL 8750, *Light Emitting Diode (LED) Equipment for Use in Lighting Products*

UL 60065, *Audio, Video, and Similar Electronic Apparatus – Safety Requirements*

UL 60320-1, *Appliance Couplers for Household and Similar General Purposes – Part 1: General Requirements*

UL 60384-14, *Fixed Capacitors for Use in Electronic Equipment – Part 14: Sectional Specification: Fixed Capacitors for Electromagnetic Interference Suppression and Connection to the Supply Mains*

UL 60730-1, *Automatic Electrical Controls – Part 1: General Requirements*

UL 60950-1, *Information Technology Equipment – Safety – Part 1: General Requirements*

UL 61058-1, *Switches for Appliances – Part 1: General Requirements*

Documents
Document Sharing Hub

Full document details: UL 962A 2024

UL 62368-1, *Audio/Video, Information and Communication Technology Equipment – Part 1: Safety Requirements*

6 Glossary

6.1 For the purpose of this standard the following definitions apply.

6.2 ATTACHMENT PLUG – A male contact device for the temporary connection of a flexible cord or cable to a receptacle outlet or cord connector.

6.3 CLASS 2 LEAD – Consists of a factory-made, power-limited cable with an output connector at one end. The other end is secured within the housing or enclosure of the FPDU. The output connector is intended for connection to the Class 2 separable interface (such as Universal Serial Bus [USB] connectors).

6.4 CLASS 2 SEPARABLE INTERFACE – A separable component containing Class 2 low-voltage connector(s) only (such as Universal Serial Bus (USB) connectors).

6.5 CORD CONNECTOR – A female contact device assembled or molded on flexible cord to allow a detachable electrical connection to an attachment plug.

6.6 CURRENT TAP – A single-outlet contact device that is integral to the attachment plug of the FPDU power supply cord.

6.7 FIXED FURNISHING – Intended to be permanently connected electrically to a source of supply and meets any of the following:

a) Intended to be fastened in place and requiring tools for removal; or

b) Integrated into the structure as a permanent fixture, such as but not limited to permanent countertops of kitchens and bathrooms.

6.8 FURNITURE POWER DISTRIBUTION UNIT (FPDU) – An electrical enclosure provided with an attached power supply cord and attachment plug or current tap for connection to a permanently installed branch circuit receptacle outlet. The FPDU is provided with a mounting means for attachment to a furnishing. The electrical enclosure may be provided with one or more receptacle outlets. The FPDU may also be provided in any combination of the following configurations:

a) The electrical enclosure connected to the power supply cord and attachment plug may be supplied with up to six lengths of flexible cord not exceeding 6 feet in length; each length shall be terminated with a maximum of 3 receptacle outlets within an electrical enclosure or 3 cord connectors. Refer to 14.6 limiting the total number of outlets, Table 13.1 for overload requirements and 13.1.8 for interconnecting cord requirements.

b) Provided with supplementary overcurrent protection.

c) Provided with manual or automatic switch(es) such as an integral appliance timer to control all or some of the receptacle outlets.

d) Provided with indicator lights.

e) When provided with three or more receptacle outlets the FPDU may be provided with a surge protective device (SPD) or an electromagnetic interference (EMI) filter.

f) A FPDU may employ non-electrical decorative features. The decorative features may include various shapes such as rocks, birds and animals, etc.

AVA Documents
Document Sharing Hub
Full document details: UL 962A 2024

g) A FPDU may employ telephone equipment and communication circuit protectors.

h) A FPDU may employ an antenna discharge unit or provide antenna connections for televisions and video products.

i) When provided with three or more receptacle outlets the FPDU may be provided with LED (Light Emitting Diode) Luminaire(s).

j) A FPDU may be provided with a wireless charging circuit.

k) Provided with isolated secondary circuits.

l) Provided with batteries located in isolated secondary circuits. See UL 962A Annex A – Furniture Power Distribution Units Incorporating Batteries.

m) Provided with an integral Class 2 lead and mating Class 2 separable interface, or an integral power supply with one or more Class 2 output connector(s).

n) Provided with receptacles with integral power supplies with Class 2 output connectors.

6.9 ISOLATED SECONDARY CIRCUIT – A circuit derived from an isolating source (such as a transformer, optical isolator, limiting impedance or electro-mechanical relay) and having no direct connection back to the primary circuit (other than through the grounding means). A secondary circuit that has a direct connection back to the primary circuit is considered part of the primary circuit.

6.10 PORTABLE FURNISHING – Meets all of the following:

a) Not secured to the building structure unless provided with a securement means that allows the furnishing to be removed without the use of tools, and

b) Connected electrically to an electrical source of supply with a power supply cord and plug.

Exception: A securement means to the structure or to stationary or fixed furnishings in order to prevent tipping of the portable furnishing that requires the use of tools is not prohibited from being employed.

6.11 PORTABLE GROUND-FAULT CIRCUIT INTERRUPTER (GFCI) CLASS A – A plug-in type ground-fault circuit interrupter provided with male blades or with a power-supply cord with an attachment plug. Portable GFCIs are constructed so that when any single supply conductor, including the neutral conductor, is opened protection to the user is maintained. Class A GFCIs trip when the current to ground has a value in the range of 4 through 6 mA.

6.12 PRIMARY CIRCUIT – A circuit in which the wiring and components are conductively connected to the AC power interface.

6.13 RECEPTACLE OUTLET – A female contact device mounted within an electrical enclosure to allow a detachable electrical connection of an attachment plug.

6.14 RISK OF FIRE – A risk of fire is considered to exist at any two points in a circuit where:

a) The open circuit voltage is more than 30 Vrms (42.4 V peak) and the energy available to the circuit under any condition of load including short circuit, results in a current of 8 A or more after 1 minute of operation; or

b) A power of more than 15 watts can be delivered into an external resistor connected between the two points.

Documents
Document Sharing Hub
Full document details: UL 962A 2024

6.15 STATIONARY FURNISHING – Intended to be relocatable and meets all of the following:

a) In normal use of the furnishing, not readily movable by an unaided individual due to the weight, size, or configuration of the furnishing, and

b) Not secured to the building structure unless provided with a securement means that allows the furnishing to be removed without the use of tools; and

c) Connected electrically to an electrical source of supply with a power supply cord and plug.

Exception: A securement means to the structure or to fixed or other stationary furnishings in order to prevent tipping of the stationary furnishing that requires the use of tools is not prohibited from being employed.

6.16 SUPPLEMENTARY PROTECTOR – A manually resettable device designed to open the circuit automatically on a predetermined value of time versus current or voltage within an appliance or other electrical equipment. It is permitted to be provided with a manual means for opening or closing the circuit.

CONSTRUCTION

7 Enclosure

7.1 General

7.1.1 The enclosure shall be formed and assembled so that it has the strength and rigidity required to resist the abuses to which it is subjected, without resulting in a risk of fire, electric shock, or injury to persons, due to total or partial collapse with resulting reduction of spacings, loosening or displacement of parts or other serious defects.

7.1.2 An opening in an enclosure shall have such size and shape – or shall be so covered by screening or barrier or by an expanded, perforated, or louvered panel – that a test rod having a maximum diameter of 1/16 in (1.6 mm) shall be prevented from contacting live parts. See Accessibility Tests, Section 44.

7.1.3 A keyhole slot, notch, or similar means for mounting, when provided, shall be located so that the supporting screws or the like cannot damage any electrical insulation or reduce spacings to live parts.

7.1.4 A barrier that covers a mounting hole and thereby forms part of the required enclosure shall be subjected to the Mounting Hole Barrier Tests, Section 35.

7.1.5 If a FPDU employs a decorative or ancillary feature, such as a rock, bird, animal, Luminaire, or a storage compartment, it shall be designed so that the addition of the decorative feature part(s) does not:

a) Interfere with the function or mounting means described in Section 10, Mounting Means;

b) Interfere with turning the power "on" or "off" using the switch provided on the FPDU; or

c) Interfere with an attachment plug from fully seating in the receptacle outlet slot(s) of the FPDU.

7.1.6 An FPDU that employs an enclosure cap or cover over the reset actuator (i.e. stem) of a supplementary protector shall not interfere with trip and/or reset function of the supplementary overcurrent protector.

7.1.7 A FPDU that incorporates devices such as an integral appliance timer to control all or some of the receptacles shall comply with UL 917 or UL 244A. Compliance with UL 60730-1, and/or the applicable Part 2 standard from the UL 60730 series fulfills the UL 244A requirements.

AVA Documents
Document Sharing Hub
Full document details: UL 962A 2024

7.1.8 Products that employ timer(s) as specified in 6.5 shall be marked as specified in 53.23 to warn the user of the possible hazards.

7.1.9 Telephone equipment and communication circuit protectors included in a FPDU shall comply with the requirements in UL 60950-1 or UL 62368-1 and the requirements in UL 497A.

7.1.10 A FPDU that incorporates an antenna discharge unit or provides antenna connections to a television, a high-voltage video product, or antenna shall comply with the applicable requirements in UL 452, and UL 1492 or UL 60065, or UL 62368-1.

7.1.11 A cord-and-plug-connected FPDU with three or more receptacle outlets and that employs an electromagnetic interference filter shall also comply with UL 1283.

7.1.12 A cord-and-plug-connected FPDU with three or more receptacle outlets and that employs a surge protective device shall also comply with UL 1449, for SPD Type 3.

7.1.13 A FPDU that employs an uninterruptible power supply located in the primary circuit shall comply with the requirements in UL 1778.

7.1.14 The enclosure interior of a FPDU intended to be mounted on or inside a desk or similar furnishing surface shall be covered or otherwise protected from spillage while not in use. The FPDU enclosure interior containing power circuits shall comply with the Spill Test, Section 43. The FPDU enclosure interior portion containing solely Class 2 load circuits is not considered during this test.

Exception No. 1: When the instructed installation of the FPDU is for it to be mounted above the furnishing surface and oriented such that spilled liquid on the furnishing surface cannot enter any part of the FPDU, these requirements do not apply.

Exception No. 2: When the FPDU is provided with a portable GFCI Class A that complies with UL 943 and the GFCI is located at the attachment plug or within 12 in (305 mm) of the attachment plug compliance with the spill test is not required.

7.1.15 Removable knock-outs and pry-outs shall be fully concealed by any of the following:

a) A pressure-sensitive label that complies with UL 969, and includes markings or instructions, or

b) A blank pressure-sensitive label that complies with UL 969, provided that the FPDU also includes an installation instruction that complies with 54.6.

Exception: This requirement does not apply to removable knock-outs or pry-outs that, if removed, permit access solely to Class 2 wiring terminals or circuits.

7.2 Metallic

7.2.1 A metal enclosure of a FPDU shall have a minimum thickness in accordance with Table 7.1.

Documents
Document Sharing Hub
Full document details: UL 962A 2024

Table 7.1
Minimum Thicknesses of Enclosure Metal

Metal	At small, flat unreinforced surfaces and at surfaces of a shape or size to provide adequate mechanical strength		At relatively larger unreinforced flat surfaces	
	inch	(mm)	inch	(mm)
Die-cast metal	3/64	(1.2)	5/64	(2.0)
Cast malleable iron	1/16	(1.6)	3/32	(2.4)
Other cast metal	3/32	(2.4)	1/8	(3.2)
Uncoated sheet steel	0.026	(0.66)	0.026	(0.66)
Galvanized sheet steel	0.029	(0.74)	0.029	(0.74)
Nonferrous sheet metal	0.036	(0.91)	0.036	(0.91)

7.2.2 The enclosure shall comply with the strain relief, impact, and crush test requirements of Sections 36, 38, and 39 respectively, of this standard.

7.3 Nonmetallic

7.3.1 A polymeric enclosure of a FPDU for use in a portable furnishing shall comply with the flammability requirements in UL 746C, for non-attended, non-intermittent duty portable equipment and shall be marked in accordance with 53.15.

7.3.2 A polymeric enclosure of a FPDU for use in a stationary furnishing shall comply with the flammability requirements in UL 746C, for stationary equipment.

7.3.3 The enclosure shall comply with the strain relief, impact, crush and mold stress-relief test requirements of Sections 36, 38, 39 and 42 respectively, of this standard.

7.3.4 A decorative feature or mounting means of a FPDU which is constructed of polymeric material and does not function as an enclosure of live parts shall comply with the flammability requirements for an enclosure material as identified in UL 746C, for non-attended, non-intermittent duty portable equipment.

Exception: Decorative parts are not required to be made of a material classed 5VA, 5VB, V-0, V-1, V-2, or HB, providing the part does not occupy a volume greater than 2 cubic centimeters (0.122 cubic inch), does not have any dimension greater than 3 cm (1.18 inch), and is located so it cannot propagate flame from one area to another or bridge between a possible source of ignition and other ignitable parts.

7.3.5 A polymeric enclosure portion of a FPDU that houses solely an electrical part that is supplied from an isolated power supply of less than 42.4 volts AC or less than 60 volts DC and the power available is less than 15 watts shall comply with the flammability requirements for an enclosure material as identified in UL 746C, for non-attended, non-intermittent duty portable equipment.

8 Mechanical Assembly

8.1 A FPDU shall be formed and assembled so as to reduce the risk of contact with any sharp edges, fins, burrs or the like that are capable of increasing the risk of injury to persons, or abrade the insulation on conductors or otherwise damage wires.

8.2 A switch, a lampholder, a power-supply cord and its strain-relief bushing, receptacle, or similar component shall be mounted securely and, except as noted in 8.3 and 8.4, shall be restrained from turning. See 8.5.

AVA Documents
Document Sharing Hub
Full document details: UL 962A 2024

8.3 The requirement that a switch be restrained from turning is capable of being waived when all of the following conditions are met:

a) The switch is to be of the plunger or other type whose actuator does not tend to rotate when operated (the actuator of a toggle or rocker switch is considered to be subject to forces that tend to turn the switch during operation of the switch).

b) The means of mounting the switch makes it unlikely that operation of the switch loosens it.

c) The spacings are not to be reduced below the minimum acceptable values when the switch rotates.

8.4 A lampholder of a type in which the lamp is not intended to be replaced, such as a neon pilot or indicator light in which the lamp is sealed in a nonremovable jewel, is not required to be restrained from turning when the rotation is not capable of reducing spacings below the minimum acceptable values.

8.5 The means by which the turning specified in 8.2 is prevented is to include more than friction between surfaces. For example, a lockwasher, properly applied, is not prohibited from being used as a means to restrain turning of a device having a single-hole mounting means.

8.6 A FPDU with a retractable vertical tower, that has a horizontal platform area greater than 9 in^2 (58.1 cm^2) and is also provided with a means for locking the vertical tower in an open (upright) position must remain in the open (upright) position when subjected to the Retractable Force Test in Section 41. A retractable vertical tower is considered to have a means for locking in an open (upright) position when a separate mechanism or motion, other than pushing the tower straight down, is required to release the locking mechanism to allow for closing (lowering) of the vertical tower.

Exception: A FPDU with a retractable vertical tower not provided with a means for locking the vertical tower in an open (upright) position does not need to comply with the Retractable Force Test in Section 41.

8.7 A FPDU with a retractable vertical tower intended to be closed with power supply cord(s) connected to each receptacle, must be able to completely close and reopen with the intended power supply cord(s) connected and shall be constructed so as not to pinch, compress or damage the power supply cord jacket or insulation and shall comply with the Cycling Test, Section 48.

8.8 To prevent personal injury, the retracting mechanism of a FPDU with a retractable vertical tower must not be accessible. Compliance is determined using the accessibility probe in Figure 9.1.

9 Enclosure Accessibility and Accessibility of Live Parts

9.1 The electrical parts of a FPDU that do not require use of a tool for access shall be located or enclosed so that persons are protected against inadvertent contact with uninsulated live parts and film-coated magnet wire.

Exception: Connectors and contacts supplied by an isolated secondary circuit meeting Class 2 or Limited Power Circuit (LPS) power levels may be accessible to the user.

9.2 An opening in the enclosure of a FPDU is not prohibited when an uninsulated live part or film-coated magnet wire is not capable of being contacted by the probes specified in 44.1.2 and shown in Figure 9.1. The probes shall be applied to any depth that the opening permits, and shall be rotated or angled before, during, and after insertion through the opening to any position that is required to examine the enclosure. The probes shall be applied in any possible configuration; and, when required, the configuration shall be changed after insertion through the opening.

Documents
Document Sharing Hub
Full document details: UL 962A 2024

9.3 The probes shall be used as a measuring instrument to evaluate the accessibility provided by an opening, and not as an instrument to evaluate the strength of a material; it shall be applied with the minimum force required to determine accessibility in accordance with the Accessibility Tests, Section 44.

Documents
Document Sharing Hub

Full document details: UL 962A 2024

Figure 9.1

Accessibility Probe

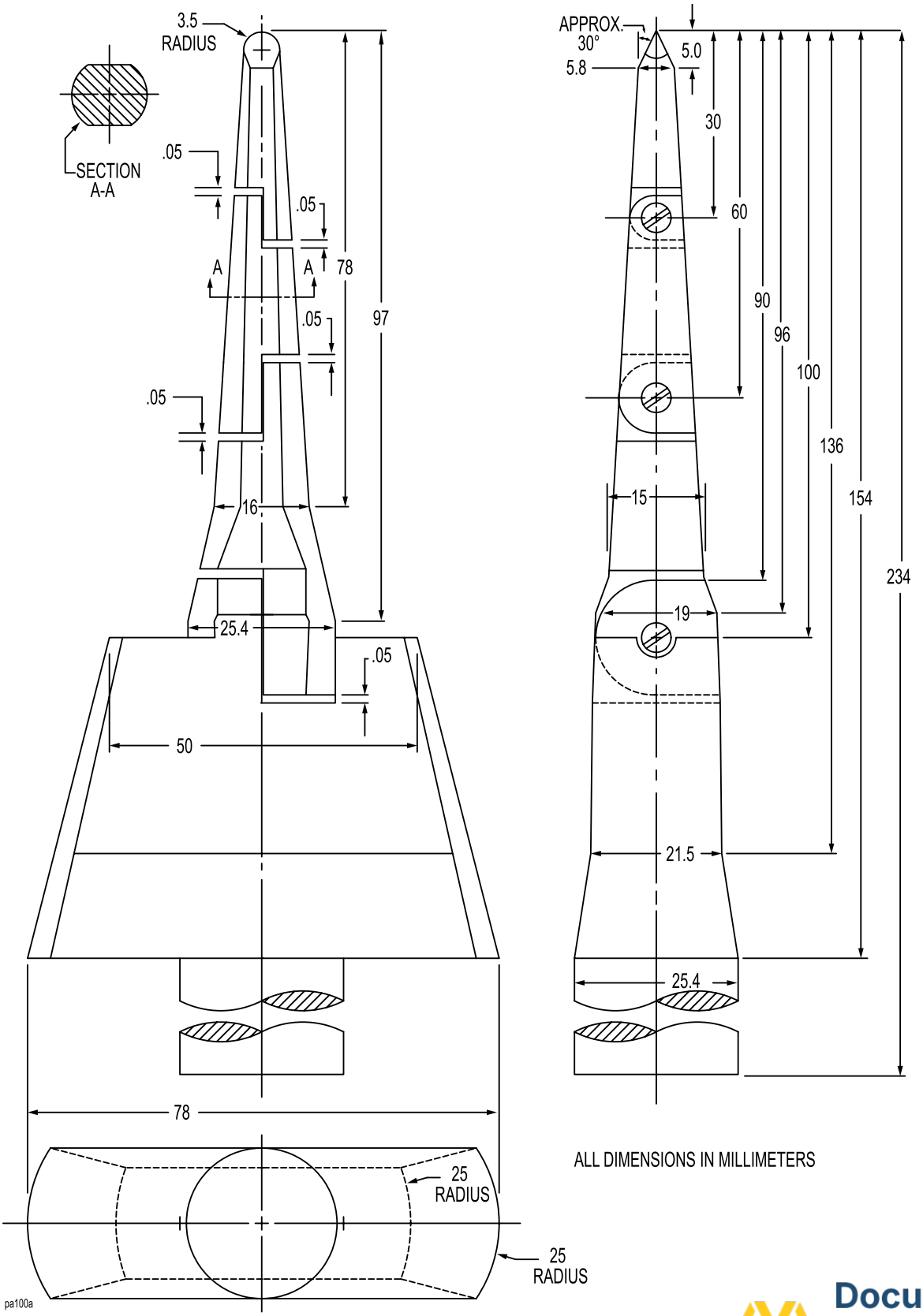

Documents
Document Sharing Hub
Full document details: UL 962A 2024

10 Mounting Means

10.1 A FPDU shall be provided with a mounting means.

10.2 The mounting means shall comply with Section 35, Mounting Hole Barrier Test, and Section 40, Adequacy of Mounting Test.

10.3 Adhesive may be used to secure a FPDU when the adhesive complies with the Specialized Applications – General Adhesives, Functional Analysis, and Program of Investigation for Adhesives in UL 746C. When performing the adhesive investigations, the maximum force for the Program of Investigation – End-Product Evaluation of UL 746C shall be the weight of the FPDU. When a suitable adhesive is used to mount the FPDU, the Adequacy of Mounting test is not required to be conducted.

11 Corrosion Protection

11.1 Iron and steel parts or other parts not inherently corrosion resistant shall be protected against corrosion by painting, enameling, galvanizing, plating, or other equivalent means.

Exception: This requirement does not apply to minor parts of iron or steel, such as washers, screws and the like that are not in the grounding conductor path.

12 Insulating Materials

12.1 A barrier or integral part, such as an insulating washer or bushing, and a base or support for the mounting of live parts, shall be of a moisture-resistant material that will not be damaged by the temperature and stresses to which it will be subjected under conditions of actual use.

12.2 An insulating material is to be investigated with regard to its acceptability for the application in accordance with UL 746C. Materials, such as mica, ceramic, or some molded compounds are capable of being used as the sole support of live parts. When it is required to investigate a material to determine its acceptability, consideration is to be given to such factors as its mechanical strength, resistance to ignition sources, dielectric strength, insulation resistance, and heat-resistant properties in both the aged and unaged conditions, the degree to which it is enclosed, and any other features affecting the risk of fire and electric shock.

12.3 Vulcanized fiber, industrial laminates, polymeric films or similar materials are capable of being used for insulating bushings, washers, separators, and barriers, but not as sole support for uninsulated live parts. Hard rubber is not to be used.

Exception: Industrial laminates that have been investigated for the purpose are capable of being used as sole support for uninsulated live parts.

13 Power-Supply Cord

13.1 General

13.1.1 The power-supply cord shall be of the grounding type and shall employ one of the following flexible cord Types: SJ, SJE, SJO, SJT, SJTO, or equivalent.

Exception: SPT-3 is not prohibited from being used on a FPDU rated 15 A or less when marked in accordance with 53.14.

13.1.2 A detachable power-supply cord shall not be used.

Documents
Document Sharing Hub
Full document details: UL 962A 2024

13.1.3 The minimum conductor size of the power-supply cord shall be as indicated in Table 13.1.

Table 13.1
Guide to Construction and Performance Requirements for Furniture Power Distribution Units

FPDU rating (A)	Minimum power cord size (AWG)	Number of receptacles	Supplementary OCP required?		Maximum supplementary OCP rating[a, d] (A)	Temperature test load (A)	Minimum internal wiring size[b] (AWG)
				When LED[i] luminaire or wireless charging circuits are incorporated			
≤ 20	12	<6	NO	YES	20[c]	20[l]	12
≤ 20	12	≥6	YES	YES	20	20[h]	12
≤ 15	14[g]	<4	NO	YES	15[c]	15[h]	14[g]
≤ 15	14[g]	≥4	YES[g]	YES	15	15[h]	14[g]
≤ 15	14[g]	<4	NO	YES	15[c]	15[e,f]	14[g]
≤ 15	14[g]	≥4	YES[g]	YES	15	OCP[f]	14[g]
≤12	16[g]	<4	NO	Not permitted	15	15	16[g]

[a] OCP shall not trip when the FPDU is operated at the FPDU marked rated current.

[b] Smaller AWG is not prohibited from being used when an OCP is provided and the results of the Temperature Test (Section 29), the Fault Current Test (Section 33), and the Overcurrent Test (Section 34) comply with the requirements of those tests using the smaller AWG wire. Isolated secondary conductors shall also comply with Sections 19 and 23.

[c] When provided with an OCP.

[d] Maximum rating. An OCP rated less than the Maximum Supplementary OCP rating and not less than the FPDU rating complies with the intent of this requirement. See note (a) above.

[e] Test is capable of being conducted at OCP rating when provided.

[f] When the OCP rating is greater than the FPDU rating, conduct the Temperature Test at the OCP rating. The OCP is not prohibited from being bypassed when nuisance tripping occurs during the Temperature Test. If the OCP is bypassed during the Temperature Test at OCP rating, then the Temperature Test needs to be repeated at FPDU rating to confirm that the OCP does not nuisance trip at this level. See note (a) above.

[g] An OCP is not required and/or the power supply cord is permitted to be 16 AWG and/or the internal wiring is permitted to be 16 AWG for a household (residential) FPDU as long as:

a) FPDU is not rated higher than 12 amps;

b) Either one, two, three or four receptacles are provided;

c) All other components are evaluated for use at 15 A;

d) The Temperature Test load is 15 A.

e) The FPDU is marked in accordance with 53.16, except for a FPDU with one receptacle.

f) No LED Luminaire is provided.

[h] The OCP is not prohibited from being bypassed when nuisance tripping occurs during the Temperature Test. If the OCP is bypassed during the Temperature Test at Temperature Test Load rating, then the Temperature Test needs to be repeated at FPDU rating to confirm that the OCP does not nuisance trip at this level. See note (a) above.

[i] A FPDU incorporating an LED Luminaire shall be provided with supplementary OCP as shown in the column "Maximum Supplementary OCP rating[a,d] (A)". The FPDU shall also be provided with instructions as indicated in 54.1.

13.1.4 The length of a power-supply cord – as measured from the outside surface of the enclosure of the FPDU to the plane of the face of the attachment plug – shall not exceed 25 ft (7.6 m) nor be less than 1.5 ft (0.46 m).

13.1.5 A power-supply cord shall have a voltage rating not less than the rated voltage of the FPDU and have an ampacity not less than the current rating of the FPDU.

AVA Documents
Document Sharing Hub
Full document details: UL 962A 2024

13.1.6 The power-supply cord shall not include a through-cord switch.

13.1.7 An FPDU as described in 1.1 shall be constructed such that the total combined length of the power supply cord and the longest interconnecting cord shall not exceed 25 ft (7.6 m).

13.1.8 An interconnecting cord shall comply with all the requirements of power supply cords except 13.1.4 and cannot exceed 6 ft (1.8 m) in length.

13.1.9 The plug that is employed in a FPDU shall be molded-on or assembled-on to the flexible cord. The plug shall be the grounding type and shall comply with the requirements in UL 498 or UL 817. The molded-on or attachment plug is permitted to be hospital grade plugs complying with UL 817 or with Supplement SC of UL 498, respectively, but the FPDU shall be marked in shall be in accordance with 53.19.

13.2 Class 2 lead

13.2.1 A Class 2 lead may be one of the following types:

a) Type CL2 cable in accordance with UL 13.

b) An appliance wiring material with a maximum length of 10 feet (3.5 m), minimum of 26 AWG, rated minimum VW-1 flammability and minimum 300 V, in accordance with UL 758.

13.2.2 One end of a Class 2 lead shall be either molded-on or permanently attached to the FPDU housing or enclosure. Where the Class 2 lead passes into the interior of the FPDU housing or enclosure, the power-limited cable shall be separated in accordance with 23.1 from AC power circuit conductors and from conductive parts energized by AC power circuits.

13.2.3 The other end of a Class 2 lead shall terminate in a connector capable of being inserted into the mating connector of the Class 2 separable interface.

13.2.4 Permanently attached can be achieved by crimping, welding, riveting, or equivalent, to render the connector non-rewireable.

13.3 Bushings

13.3.1 Where the power-supply cord passes through an opening in the enclosure, a smooth, well-rounded surface shall be provided to protect the cord from damage.

13.4 Strain relief

13.4.1 Strain relief shall be provided so that a mechanical stress on a power-supply cord or a Class 2 lead is not transmitted to terminals, splices, or interior wiring. See Strain Relief Test, Section 36.

13.4.2 The strain relief means shall not damage the insulation or cord jacket. The normal compressive deformation inherent in providing strain relief is not considered to be damage.

13.5 Push back relief

13.5.1 Means shall be provided to prevent the supply cord or lead from being pushed into the enclosure of an appliance through the cord-entry hole when such displacement results in:

a) Subjecting the supply cord or lead to mechanical damage;

Documents
Document Sharing Hub
Full document details: UL 962A 2024

b) Exposing the supply cord or lead to a temperature higher than that for which it is rated;

c) Reducing spacings (such as to a metal strain-relief clamp) below the minimum required values; or

d) Damaging internal connections or components.

To determine compliance, the supply cord or lead shall be tested in accordance with Section 37, Push Back Relief Test.

14 Receptacles

14.1 The receptacle outlets of a FPDU shall have a current rating of 15 or 20 A and a voltage rating of 125 or 250 V. The contact components of a receptacle shall have a voltage and current rating equal to that of the attachment plug on the power-supply cord.

Exception: A 15 A receptacle is not prohibited from being used with a FPDU with a 20 A attachment plug.

14.2 All of the receptacle outlets of a FPDU shall have the same current rating and shall be of the grounding type. They are not prohibited from being of the same or different slot configurations (locking and non-locking).

14.3 The receptacle outlets of a FPDU shall comply with the applicable requirements in UL 498. The grounding contact of the receptacle shall comply with the requirements of the Grounding Contact Test in UL 498. Receptacle outlets of a FPDU are permitted to be hospital grade receptacles complying with Supplement SC of UL 498 but the FPDU shall be marked in accordance with 53.19.

14.4 The receptacle outlets of a FPDU that also incorporates terminals for coaxial cable (TV/CATV) connection shall be marked in accordance with 53.13.

14.5 A FPDU intended to be mounted on or inside a desk or similar furnishing surface shall be covered or otherwise protected from spillage while not in use. The receptacle(s) shall comply with the Spill Test, Section 43; the Class 2 output connector(s) of receptacles with integral power supplies employing Class 2 output connector(s) is (are) not considered during this test.

Exception No. 1: When the instructed installation of the FPDU is for it to be mounted above the furnishing surface and oriented such that spilled liquid on the furnishing surface cannot enter any part of the FPDU, these requirements do not apply.

Exception No. 2: When the FPDU is provided with a portable GFCI Class A that complies with UL 943 and the GFCI is located at the attachment plug or within 12 in (305 mm) of the attachment plug compliance with the spill test is not required.

14.6 A FPDU shall be provided with a maximum of eight receptacles.

Exception No. 1: A FPDU is able to be provided with more than eight receptacles when the FPDU is provided with a circuit breaker that complies with the requirements in UL 489, and is in accordance with NFPA 70 branch circuit protection.

Exception No. 2: A FPDU is able to be provided with more than eight receptacles when the FPDU is provided with a supplementary overcurrent protection device that shall be capable of clearing a fault current of not less than that indicated in Table 16.1 and shall also comply with the requirements in UL 1077. The supplementary overcurrent protection device shall have been subjected to the overload test in UL 1077, tested for motor starting at 6 times the AC full load current rating.

AVA Documents
Document Sharing Hub
Full document details: UL 962A 2024

14.7 A FPDU employing tamper-resistant receptacle outlets shall be marked "TR" or "Tamper Resistant" provided the receptacle outlets comply with the Tamper-Resistant Receptacle requirements, as specified in UL 498.

15 Current Tap

15.1 The outlet of a current tap shall have the same current rating of 15 or 20 Amps and the same voltage rating of either 125 or 250 V as the current tap's plug.

15.2 A current tap shall be of the grounding type. The current tap outlet may be the same or different slot configuration (locking and non-locking) as the plug.

15.3 A FPDU may employ a current tap fitting when the power supply cord size and the number of outlets, including the outlet of the current tap, do not require supplementary protection or the current tap is protected by the supplementary protection. A FPDU may not utilize a current tap when supplementary overcurrent protection is required.

15.4 The outlet of a current tap in a FPDU shall comply with the applicable requirements for a current tap outlet in UL 498. The grounding contact of the current tap outlet shall comply with the current tap requirements of the Grounding Contact Test in UL 498.

16 Supplementary Overcurrent Protection

16.1 A FPDU shall be provided with supplementary overcurrent protection as indicated in Table 13.1.

16.2 A supplementary protection device shall not open during the Temperature Test, Section 29.

16.3 A supplementary overcurrent protection device shall be capable of clearing a fault current of not less than that indicated in Table 16.1 and shall comply with the requirements in UL 1077. The supplementary overcurrent protection device shall have been subjected to the Overload Test in UL 1077, tested for motor starting at 6 times the AC full load current rating.

Exception No. 1: A fuse that is capable of clearing a fault current of not less than that indicated in Table 16.1, and that complies with the requirements in UL 248-14, is not prohibited from being used as a supplementary overcurrent protection device.

Exception No. 2: A circuit breaker that complies with the requirements in UL 489, and is in accordance with NFPA 70 for branch circuit protection, is not prohibited from being used in lieu of a supplementary overcurrent protection device.

Table 16.1
Circuit Capacity of Supply Source

Rating (VA)	Available fault current (A)
1875 or less	1000
More than 1875 to 3750	2000
More than 3750	3500

16.4 The overcurrent protective device shall be a supplementary protector of the trip-free type with a manual reset (i.e. rocker switch or push button), or a replaceable fuse installed in an extractor type fuse holder. An FPDU that is provided with fuses that are intended to be replaced in the field shall be marked in accordance with the requirements in 53.10.

AVA Documents
Document Sharing Hub
Full document details: UL 962A 2024

Exception: A non-replaceable fuse is permitted if the enclosure of the FPDU is marked in accordance with the requirements in 53.28.

16.5 An FPDU that employs an enclosure cap or cover over the reset actuator (i.e. stem) of a supplementary overcurrent protector shall comply with Impact test 38.1.4 followed by the Supplementary Overcurrent Protector Check Test, 38.5.

16.6 A single-pole supplementary protection device shall be connected in the ungrounded (line) conductor of the supply circuit only. A double-pole device shall be connected on both the ungrounded and grounded (neutral) conductors such that when it operates, it opens both ungrounded and grounded conductors.

16.7 A supplementary protection device shall not be connected in the grounding conductor.

16.8 The ampere rating of the overcurrent protective device of 16.2 shall not be greater than the ampacity of:

a) The configuration of the receptacles it is to protect; or

b) That of the power-supply cord; or

c) Other electrical components, whichever is lower.

Exception: See note (g) of Table 13.1.

16.9 Where a single overcurrent protective device does not protect all receptacle outlets, more than one overcurrent protective device shall be used, and each receptacle outlet shall be marked to indicate the rating of the overcurrent protective device connected to it. See 53.7.

16.10 Thermal cutoff devices, thermal relays, and similar devices, shall not be used as supplementary overcurrent protection devices.

16.11 A FPDU incorporating LED Luminaires or wireless charging circuits shall be provided with supplementary overcurrent protection. See Table 13.1.

17 Switches

17.1 Each switch shall have a voltage and current rating not less than the load it is intended to control. A switch shall open all ungrounded circuit conductors and, in addition, is not prohibited from opening the grounded circuit conductor.

17.2 A switch provided in a FPDU shall comply with the requirements of UL 61058-1. The switch shall be rated for use with other than resistive (Res), AC Tungsten filament lamp (L), or AC and DC Tungsten filament lamp (T) loads.

Exception: A switch that complies with the requirements of UL 20, for a general-use AC switch is not prohibited from being used in a FPDU.

17.3 Each switch shall indicate to the user when its associated circuit is energized. See 53.9.

Exception: A FPDU is not prohibited from being equipped with indicator or pilot lights, such as neon-series-resistor, LED type, or similar items, to show which receptacles are live, or to indicate that the unit is energized.

Documents
Document Sharing Hub
Full document details: UL 962A 2024

18 Live Parts

18.1 Current-carrying parts shall have adequate ampacity, and shall be of copper, a copper-base alloy, or other material determined to be acceptable for the use.

18.2 Uninsulated live parts shall be secured to the base or mounting surface so that they do not turn or shift in position, when such motion results in a reduction of spacings below the minimum acceptable values.

18.3 Friction between surfaces is not to be used as the sole means to prevent shifting or turning of live parts. A lockwasher is not prohibited from being used in such a manner.

19 Internal Wiring

19.1 The minimum conductor size of the internal wiring of a FPDU shall be as indicated in Table 13.1. The internal wiring of a FPDU enclosure shall be rated for the maximum voltage, temperature, and other conditions of use encountered in that FPDU enclosure.

19.2 Internal wiring shall be routed and secured to reduce the risk of mechanical damage to the insulation or stress on wiring terminations. The internal wiring shall be positively routed away from any exposed screw threads.

19.3 Screw threads, including those of sheet metal screws, shall not be exposed for more than 3/16 in (4.76 mm) inside a compartment containing wiring and shall be located so that contact with conductor insulation is unlikely.

19.4 Metal clamps and guides used for routing wiring shall have smooth, well-rounded edges.

19.5 A hole through which insulated wires pass through a sheet-metal wall within the overall enclosure of a FPDU shall be provided with a smooth, well rounded bushing or any surfaces upon which the wire can bear shall be smooth and well-rounded.

19.6 All splices and connections shall be mechanically secure and shall provide sufficient ampacity. A soldered connection shall be made mechanically secure before being soldered.

Exception: Printed-wiring board joints are not required to be mechanically secure before soldering.

19.7 A lead is considered to be mechanically secure when it is:

a) Wrapped at least halfway (180°s) around a terminal;

b) Provided with at least one right angle bend when passed through an eyelet or opening; or

c) Twisted with other conductors.

19.8 A splice shall be provided with insulation at least equivalent to the conductor insulation.

19.9 In determining whether splice insulation consisting of coated-fabric, thermoplastic, or another type of tape or tubing is capable of being used, consideration is to be given to such factors as mechanical strength, dielectric properties, heating and moisture-resistant characteristics, and the equivalent.

19.10 Where stranded wiring is connected to a wire-binding screw, the construction shall be such that any loose strand of wire is prevented from contacting live parts of opposite polarity or dead metal parts that

AVA Documents
Document Sharing Hub
Full document details: UL 962A 2024

may be grounded. This can be accomplished by use of upturned lugs on the terminal plate, pressure terminal connectors, soldering lugs, crimped eyelets, or equivalent means.

19.11 Soldered stranded (bunch tinned/solder dipped/tinned bonded) wire shall not be used with the terminals of a receptacle unless the receptacle has been investigated for such use.

19.12 A conductor that passes through and/or is connected to a movable joint such that the conductor will be flexed, shall be subjected to the Flexing Endurance Test, Section 49.

20 Spacings

20.1 The spacings of a FPDU shall comply with the requirements of Table 20.1.

Exception No. 1: The spacings between the live parts of a receptacle or switch and the intended mounting surface for the receptacle or switch shall not be less than 3/64 in (1.2 mm).

Exception No. 2: As an alternative to Table 20.1, lesser spacings may be acceptable when determined in accordance with the requirements for Clearance and Creepage Distances – Isolated Secondary Circuits, Section 21.

Exception No. 3: The acceptability of the inherent spacings of a component shall be based on the requirements for the component.

Exception No. 4: Circuits that comply with the requirements for Isolated Secondary Circuits need not be evaluated for spacings. The spacing between these circuits and other circuits shall comply with Table 20.1.

Table 20.1
Minimum Spacings

Potential involved in volts		Minimum spacing					
		0 – 50		51 – 125		126 – 250	
		inch	(mm)	inch	(mm)	inch	(mm)
Between any uninsulated live part and an uninsulated live part of opposite polarity, uninsulated grounded part other than the enclosure, or exposed metal part[b]	Through air	3/64	(1.2)	1/16	(1.6)	3/32	(2.4)
	Over surface	3/64	(1.2)	1/16	(1.6)	3/32	(2.4)
Between any uninsulated live part and the walls of a metal enclosure[b]	Shortest distance	3/64	(1.2)	1/4	(6.4)	1/4	(6.4)

[a] A printed-wiring board intended to be completely encapsulated in a suitable potting compound, epoxy, or be conformally coated shall not have any spacing less than 1/32 in (0.8 mm).

[b] For the purpose of this requirement, a metal piece or component attached to the enclosure is considered to be a part of the enclosure when deformation of the enclosure reduces the spacing between the metal piece or component and uninsulated live parts.

20.2 A barrier or liner of insulating material used in areas where spacings do not comply with the requirements in this standard shall be evaluated and determined to comply with the requirements for internal barriers outlined in UL 746C, and shall be secured in place or its position fixed by space limitations. An adhesive used to position a barrier shall be investigated for the effects of temperature, humidity, and cyclic conditions outlined in UL 746C.

20.3 Vulcanized fiber not less than 0.028 in (0.71 mm) thick is not prohibited from being used as a barrier or liner.

AVA Documents
Document Sharing Hub
Full document details: UL 962A 2024

Exception: Where required spacings are insufficient but at least 1/2 of the required spacing is provided, the vulcanized fiber is not prohibited from being 1/64 in (0.40 mm) thick.

20.4 All uninsulated live parts connected to different circuits shall be spaced from one another as though they were parts of opposite polarity, in accordance with the requirement in 20.6, and shall be investigated on the basis of the highest voltage involved.

20.5 An electrically energized screw head or nut on the underside of an insulating base shall be prevented from loosening.

20.6 In multicomponent equipment, the spacings from one component to another, from any component to the enclosure, or to other uninsulated dead metal parts excluding the component mounting surface, are based on the maximum voltage rating of the complete equipment and not on the individual component ratings. The inherent spacings within an individual component are investigated on the basis of the voltage used and controlled by the individual component. Spacings between metal oxide varistors, capacitors, and other components shall comply with the minimum spacing requirements in Table 20.1.

20.7 Spacings at a fuse and fuseholder are to be measured with a fuse in place that has the maximum standard dimensions for the rating, and such spacings are to not be less than those specified in Table 20.1.

21 Clearance and Creepage Distances – Isolated Secondary Circuits

21.1 As an alternative approach to the spacing requirements specified in 20.1, and other than as noted in 21.2, clearances and creepage distances in isolated secondary circuits of FPDU's are able to be evaluated in accordance with the requirements in UL 840, as described in 21.2.

21.2 In conducting evaluations in accordance with the requirements in UL 840, the following guidelines shall be used:

a) Unless specified elsewhere in this standard, the pollution degree within an FPDU housing, based on the presence of contaminants and possibility of condensation or moisture, shall be pollution degree 2 – Normal.

b) Pollution degree 2 exists on a printed wiring board between adjacent conductive material which is covered by any coating which provides an uninterrupted covering over at least one side and the complete distance up to the other side of conductive material;

c) Any printed wiring board which complies with the requirements in UL 796, shall be considered to provide a Comparative Tracking Index (CTI) of 100, and if it further complies with the requirements for Direct Support in UL 796 then it provides a CTI of 175;

d) For the purposes of compliance with the requirements for coatings of printed wiring boards used to achieve pollution degree 1 in accordance with UL 840, a coating which complies with the requirements for Conformal Coatings in UL 746C, complies with the requirements;

e) Pollution degree 1 is also achievable at a specific printed wiring board location by application of at least a 0.79 mm (1/32 inch) thick layer of silicone rubber or for a group of printed wiring boards through potting, without air bubbles, in epoxy or potting material.

f) Evaluation of clearances, only, to determine equivalence with current through air spacings requirements are able to be conducted in accordance with the requirements for Clearance A (Equivalency) of UL 840. An impulse test potential having a value as determined in UL 840 is to be applied across the same points of the device as would be required for the Dielectric Voltage-Withstand Test, Section 30;

Documents
Document Sharing Hub
Full document details: UL 962A 2024

g) As an alternative approach to the spacing requirements specified in 20.1 evaluation of clearances and creepage distances shall be conducted in accordance with the requirements in UL 840 for Clearance B (Controlled Overvoltage), and Creepage Distances;

h) The System Voltage used in the evaluation of the isolated secondary circuitry is able to be interpolated with interpolation continued across the table for the Rated Impulse Withstand Voltage Peak and Clearance; and

i) Determination of the dimensions of clearance and creepage distances shall be conducted in accordance with the requirements for Measurement of Clearance and Creepage Distances of UL 840.

22 Printed-Wiring Boards

22.1 A printed-wiring board shall comply with the requirements in UL 796, including direct support criteria, and shall be classed V-0, V-1, or V-2 in accordance with the requirements in UL 94.

22.2 A resistor, capacitor, inductor, or other part that is mounted on a printed-wiring board to form a printed-wiring assembly shall be secured to reduce the risk of electric shock or fire as the result of displacement from forces exerted on it during assembly, normal operation, or servicing.

22.3 A FPDU that has a receptacle grounding path through traces on a printed-wiring board shall comply with the Fault Current Test, Section 33, and the Overcurrent Test, Section 34.

22.4 A FPDU that has a load-current-carrying circuit conductor path through traces on a printed-wiring board shall comply with the Overcurrent Test, Section 34.

23 Separation of Circuits

23.1 A FPDU employing connection to telephone communication, or to data communication or incorporating isolated secondary circuits or a power-limited Class 2 circuit, shall be provided with a barrier, physically secured by means other than friction, that separates the AC power circuit conductors from the conductors of the other circuits. Bonding of the equipment grounding conductor and the referenced conductors of the telecommunication circuits is permissible.

Exception No. 1: A barrier is not required between conductors that are separated by a minimum spacing of 2 inches (50.8 mm), including lead dress.

Exception No. 2: Conductors that are suitably insulated for the maximum AC power circuit voltage involved are not required to be separated from the AC power circuit conductors, when breakage or loosening of a conductor at a terminal in either circuit cannot result in contact between uninsulated parts of one circuit and uninsulated or inadequately insulated parts of the other circuit.

Exception No. 3: For conductors other than AWM (traces on a printed-wiring board, terminals mounted on insulating blocks, and the like), the minimum separation between communication circuits and the AC power circuits shall be in accordance with Table 20.1.

24 Low Voltage Charging and Isolated Secondary Output Circuits

24.1 A FPDU provided with receptacles with integral power supplies with Class 2 output connectors shall comply with UL 498 and its Supplement SE – Receptacles with Integral Power Supplies with Class 2 Output Connectors.

Documents
Document Sharing Hub
Full document details: UL 962A 2024