UL 982

ISBN 0-7629-1013-5

Motor-Operated Household Food Preparing Machines

Documents
Document Sharing Hub

Full document details: UL 982 2006

Documents
Document Sharing Hub

Full document details: UL 982 2006

Underwriters Laboratories Inc. (UL)
333 Pfingsten Road
Northbrook, IL 60062-2096

UL Standard for Safety for Motor-Operated Household Food Preparing Machines, UL 982

Fifth Edition, Dated October 6, 2004

Revisions: This Standard contains revisions through and including March 21, 2006.

Summary of Topics

These editorial revisions to ANSI/UL 982 replace all references to UL 1020, the Standard for Thermal Cutoffs for Use in Electrical Appliances and Components, with reference to UL 60691, the Standard for Thermal-Links – Requirements and Application Guide. UL 1020 was withdrawn and superseded by UL 60691.

Text that has been changed in any manner is marked with a vertical line in the margin. Changes in requirements are marked with a vertical line in the margin and are followed by an effective date note indicating the date of publication or the date on which the changed requirement becomes effective.

The following table lists the future effective dates with the corresponding reference:

Future Effective Dates	References
April 6, 2006	Paragraphs 30.4.3, 70.2, 70.17.1(d) Exception to 60.4.1, Sections 44, 50, and 51

The revisions dated March 21, 2006 include a reprinted title page (page1) for this Standard.

The revisions dated March 21, 2006 editorially replace all references to UL 1020 with the reference to UL 60691.

As indicated on the title page (page 1), this UL Standard for Safety is an American National Standard. Attention is directed to the note on the title page of this Standard outlining the procedures to be followed to retain the approved text of this ANSI/UL Standard.

The UL Foreword is no longer located within the UL Standard. For information concerning the use and application of the requirements contained in this Standard, the current version of the UL Foreword is located on ULStandardsInfoNet at: http://ulstandardsinfonet.ul.com/ulforeword.html

The master for this Standard at UL's Northbrook Office is the official document insofar as it relates to a UL service and the compliance of a product with respect to the requirements for that product and service, or if there are questions regarding the accuracy of this Standard.

UL's Standards for Safety are copyrighted by UL. Neither a printed copy of a Standard, nor the distribution diskette for a Standard-on-Diskette and the file for the Standard on the distribution diskette should be altered in any way. All of UL's Standards and all copyrights, ownerships, and rights regarding those Standards shall remain the sole and exclusive property of UL.

Documents
Document Sharing Hub

Full document details: UL 982 2006

All rights reserved. No part of this publication may be reproduced, stored in a retrieval system, or transmitted in any form by any means, electronic, mechanical photocopying, recording, or otherwise without prior permission of UL.

Revisions of UL Standards for Safety are issued from time to time. A UL Standard for Safety is current only if it incorporates the most recently adopted revisions.

UL provides this Standard ″as is″ without warranty of any kind, either expressed or implied, including but not limited to, the implied warranties of merchantability or fitness for any purpose.

In no event will UL be liable for any special, incidental, consequential, indirect or similar damages, including loss of profits, lost savings, loss of data, or any other damages arising out of the use of or the inability to use this Standard, even if UL or an authorized UL representative has been advised of the possibility of such damage. In no event shall UL's liability for any damage ever exceed the price paid for this Standard, regardless of the form of the claim.

UL will attempt to answer support requests concerning electronic versions of its Standards. However, this support service is offered on a reasonable efforts basis only, and UL may not be able to resolve every support request. UL supports the electronic versions of its Standards only if they are used under the conditions and operating systems for which it is intended. UL's support policies may change from time-to-time without notification.

UL reserves the right to change the format, presentation, file types and formats, delivery methods and formats, and the like of both its printed and electronic Standards without prior notice.

Purchasers of the electronic versions of UL's Standards for Safety agree to defend, indemnify, and hold UL harmless from and against any loss, expense, liability, damage, claim, or judgement (including reasonable attorney's fees) resulting from any error or deviation introduced while purchaser is storing an electronic Standard on the purchaser's computer system.

If a single-user version electronic Standard was purchased, one copy of this Standard may be stored on the hard disk of a single personal computer, or on a single LAN file-server or the permanent storage device of a multiple-user computer in such a manner that this Standard may only be accessed by one user at a time and for which there is no possibility of multiple concurrent access.

If a multiple-user version electronic Standard was purchased, one copy of the Standard may be stored on a single LAN file-server, or on the permanent storage device of a multiple-user computer, or on an Intranet server. The number of concurrent users shall not exceed the number of users authorized.

Electronic Standards are intended for on-line use, such as for viewing the requirements of a Standard, conducting a word search, and the like. Only one copy of the Standard may be printed from each single-user version of an electronic Standard. Only one copy of the Standard may be printed for each authorized user of a multiple-user version of an electronic Standard. Because of differences in the computer/software/printer setup used by UL and those of electronic Standards purchasers, the printed copy obtained by a purchaser may not look exactly like the on-line screen view or the printed Standard.

An employee of an organization purchasing a UL Standard can make a copy of the page or pages being viewed for their own fair and/or practical internal use.

The requirements in this Standard are now in effect, except for those paragraphs, sections, tables, figures, and/or other elements of the Standard having future effective dates as indicated in the note following the affected item. The prior text for requirements that have been revised and that have a future effective date are located after the Standard, and are preceded by a ″SUPERSEDED REQUIREMENTS″ notice.

Documents
Document Sharing Hub

Full document details: UL 982 2006

New product submittals made prior to a specified future effective date will be judged under all of the requirements in this Standard including those requirements with a specified future effective date, unless the applicant specifically requests that the product be judged under the current requirements. However, if the applicant elects this option, it should be noted that compliance with all the requirements in this Standard will be required as a condition of continued Listing and Follow-Up Services after the effective date, and understanding of this should be signified in writing.

Copyright © 2006 Underwriters Laboratories Inc.

This Standard consists of pages dated as shown in the following checklist:

Page	Date
1	March 21, 2006
2-129	October 6, 2004
130	October 22, 2004
131-138	October 6, 2004
A1-A2	March 21, 2006
SR1-SR10	October 6, 2004

Documents
Document Sharing Hub

Full document details: UL 982 2006

No Text on This Page

Documents
Document Sharing Hub

Full document details: UL 982 2006

OCTOBER 6, 2004
(Title Page Reprinted: March 21, 2006)

ANSI/UL 982-2004

1

UL 982

Standard for Motor-Operated Household Food Preparing Machines

Prior to the first edition, the requirements for the products covered by this standard were included in the Standard for Motor-Operated Appliances, UL 73.

First Edition – January, 1975
Second Edition – May, 1979
Third Edition – February, 1989
Fourth Edition – February, 1995

Fifth Edition

October 6, 2004

The most recent designation of ANSI/UL 982 as an American National Standard (ANSI) occurred on September 16, 2004.

This ANSI/UL Standard for Safety, which consists of the Fifth edition with revisions through March 21, 2006, is under continuous maintenance, whereby each revision is ANSI approved upon publication. Comments or proposals for revisions on any part of the Standard may be submitted to UL at any time. Proposals should be submitted via a Proposal Request in UL's On-Line Collaborative Standards Development System (CSDS) at http://csds.ul.com.

An effective date included as a note immediately following certain requirements is one established by Underwriters Laboratories Inc.

Revisions of this Standard will be made by issuing revised or additional pages bearing their date of issue. A UL Standard is current only if it incorporates the most recently adopted revisions, all of which are itemized on the transmittal notice that accompanies the latest set of revised requirements.

ISBN 0-7629-1013-5

COPYRIGHT © 1973, 2006 UNDERWRITERS LABORATORIES INC.

Documents
Document Sharing Hub

Full document details: UL 982 2006

No Text on This Page

Documents
Document Sharing Hub

Full document details: UL 982 2006

CONTENTS

INTRODUCTION

1 Scope 8
2 Components 8
3 Units of Measurement 9
4 Undated References 9
5 Glossary 9

CONSTRUCTION

6 General 11
7 Frame and Enclosure 11
8 Overcurrent-Protective Devices 19
9 Mechanical Assembly 19
10 Protection Against Corrosion 20
11 Power Supply Connections – Cord-Connected Appliances 20
11.1 Cords and plugs 20
11.2 Pin terminals 25
11.3 Strain relief 25
11.4 Cord bushings 26
12 Power Supply Connections – Permanently-Connected Appliances 26
12.1 General 26
12.2 Wiring terminals 27
12.3 Grounded terminals and leads 28
13 Internal Wiring 30
14 Live Parts 31
15 Electrical Insulation 32
16 Motors 32
16.1 General 32
16.2 Overload protection 33
17 Switches 35
18 Capacitors 37
19 Spacings 38
20 Grounding 40
20.1 Required grounding 40
20.2 Continuity 40
20.3 Grounding identification 41
21 Flooding of Live Parts 41

PROTECTION AGAINST PERSONAL INJURY

22 General 42
23 Attachments 43
24 Moving Members 43
25 Stability 44
26 Stability – Floor Supported Carts and Stands 45
27 Enclosure and Guards 46
28 Switches, Controls, and Interlocks 47
29 Surface Temperatures 48
30 Appliances 49

Documents
Document Sharing Hub
Full document details: UL 982 2006

30.1 All knives 49
30.2 Cord-connected knives 49
30.3 Battery-operated knives 49
30.4 Blenders 50
30.5 Food processors 52
30.6 Food choppers 53
30.7 Meat grinders and pasta extruding attachments 53
30.8 Coffee grinders 53
30.9 Vegetable shredders/slicers and centrifugal juicers 54
30.10 Ice-cube crushers 55
30.11 Wand-type mixers 56
30.12 Coffee mills 56
30.13 Pasta mixer-extruders 57

PERFORMANCE

31 General 57
32 Leakage Current Test 58
33 Operational Tests 61
34 Starting Current Test 61
34.1 Protection by fuses 61
34.2 Other overcurrent protection 62
35 Input Test 62
36 Normal Temperature Test 63
36.1 General 63
36.2 Food mixers 66
36.3 Blending mixers 67
36.4 Liquid mixers 68
36.5 Juice extractors 68
36.6 Meat grinders 69
36.7 Baby-food grinders 69
36.8 Baby-food choppers 69
36.9 Meat slicers 69
36.10 Churns 70
36.11 Knife sharpeners 70
36.12 Can openers 70
36.13 Ice crushers 70
36.14 Vegetable shredders 70
36.15 Ice cream mixer freezers (bucket type) 71
36.16 Coffee mills/grinders 71
36.17 Knives 71
36.18 Food choppers 72
36.19 Food processors 72
36.20 Battery-operated appliances 73
36.21 Under-cabinet or wall-mounted appliances 74
36.22 Wand-type mixers 74
36.23 Wand-type mixers with a milk shake attachment 74
36.24 Pasta mixer-extruders 75
36.25 Pasta extruding attachments 75
36.26 Handheld pizza cutters 75
37 Dielectric Voltage-Withstand Test 76
38 Leakage Current Following Humidity Tests 77
39 Leakage Current and Dielectric Voltage-Withstand Test (Repeated) 78

Documents
Document Sharing Hub
Full document details: UL 982 2006

40 Flooding of Live Parts Tests 78
41 Test for Deterioration of Parts Subject to Flexing 79
42 Test for Reliability of Parts Not Subject to Flexing 79
43 Insulation Resistance Test 81
44 Blender Cover Opening Splash Test 81
45 Resistance to Moisture Test 82
46 Continuous Operation Test 85
47 Abnormal Operation Test 86
48 Power Supplies and Battery Chargers Test 87
49 Electronic Control Circuits Test 88
50 Cut Strainer/Enclosure Stress Withstand Test 89
51 Operational Test Following Environmental Conditionings 90
52 Switch Overload Test 91
53 Switch Endurance Test 92
54 Strain Relief Test 92
55 Push Back Relief Test 93
56 Appliance Coupler Retention 93
57 Metal Enclosure Impact Tests 93
58 Enclosures of Polymeric Material for Portable Appliances 93
58.1 Scope 93
58.2 General 94
58.3 Flammability of enclosure 97
58.4 Resistance to hot-wire ignition 98
58.5 Impact 98
58.6 Stress-relief distortion 102
58.7 Input (repeated) 103
58.8 Strain relief (repeated) 103
58.9 Accessibility 103
58.10 Spacings to enclosure 106
58.11 Abnormal operation 106
58.12 Severe-use conditions 107
58.13 Thermal aging 108
58.14 Load test 108
59 Enclosures of Polymeric Material for Stationary or Fixed Appliances 109
60 Thermoplastic Coil Forms and Thermoplastic Insulating Material 109
60.1 General 109
60.2 Normal conditioning 109
60.3 Abnormal conditioning 110
60.4 Running-burnout conditioning 110

MANUFACTURING AND PRODUCTION TESTS

61 Dielectric Voltage-Withstand Test 111
62 Grounding Continuity Test 114
63 Polarization Test 114
64 Electrical Indicating Device 114

MARKINGS

65 General 114
66 Cautionary 116
66.1 General 116
66.2 Food mixer markings 117

Documents
Document Sharing Hub
Full document details: UL 982 2006

66.3 Blending mixer markings 117
66.4 Liquid mixer markings 118
66.5 Cord-connected knife markings 118
66.6 Battery-operated knife markings 118
66.7 Can openers and knife sharpener markings 118
66.8 Combination cleaver-meat tenderizer markings 119
66.9 Vegetable shredder (cone type) markings 119
66.10 Vegetable shredder (disc type) markings 119
66.11 Food grinder, ice cream freezer, and juicer (reamer type) markings 120
66.12 Food processor and food chopper markings 120
66.13 Baby-food chopper/grinder markings 120
66.14 Juicer or juice extractor (centrifugal type) markings 120
66.15 Slicer markings 121
66.16 Ice crushing appliance and ice-crushing attachment markings 121
66.17 Appliance with a lamp markings 121
66.18 Appliance (outdoor-use type) markings 122
66.19 Coffee mill and butter churn markings 122
66.20 Combination appliance markings 122
66.21 Multi-speed appliance markings 122
66.22 Appliance cart or stand markings 122
66.23 Wand-type mixer markings 123
66.24 Product with separable battery/battery pack markings 123
66.25 Appliance with electronic controls with a stop position markings 123
67 Carton Marking 123

INSTRUCTION MANUAL

68 General 124
69 All Appliances 125
70 Specific Appliances 126
70.1 Food mixers 126
70.2 Blending mixers 126
70.3 Liquid mixers 127
70.4 Cord-connected knives 127
70.5 Battery-operated knives 127
70.6 Can openers 128
70.7 Knife sharpeners 128
70.8 Combination cleaver-meat tenderizers 128
70.9 Vegetable shredders (cone type) 128
70.10 Vegetable shredder/slicers (disc type) 128
70.11 Meat grinders 129
70.12 Baby-food chopper 129
70.13 Baby-food grinders 129
70.14 Ice cream freezers 130
70.15 Ice crushers 130
70.16 Juicers (reamer type) 130
70.17 Juicers or juice extractors (centrifugal type) 130
70.18 Slicers 131
70.19 Food processors 131
70.20 Food choppers 131
70.21 Coffee mills 132
70.22 Outdoor-use appliances 132
70.23 Appliances intended for use with a cart or stand 132

Documents
Document Sharing Hub
Full document details: UL 982 2006

70.24 Appliance carts or stands 132
70.25 Multi-speed appliances 133
70.26 Battery operated appliances (with separate chargers) 133
70.27 Battery operated appliances 133
70.28 Under-cabinet and wall-mounted products, and appliances provided with a hanging means 133
70.29 Pasta mixers-extruders 134
70.30 Pasta extruding attachments 134
70.31 Wand-type mixers 134
70.32 Appliances with electronic controls with a stop position 135
71 User Maintenance 135
72 Mounting Instructions 135
73 Appliance-Outdoor Use 136
74 Polarization 137

APPENDIX A

Standards for Components A1

Documents
Document Sharing Hub

Full document details: UL 982 2006

INTRODUCTION

1 Scope

1.1 These requirements cover household motor-operated food preparing machines and kitchen accessories such as knife sharpeners and can openers, that are intended to be operated for short-periods of time resulting in cumulative use-time per year of less than 100 hours and that are for use in accordance with the National Electrical Code.

1.2 In the following text, a requirement that applies to one type of equipment coming within its scope, such as a blender, or mixer will be so identified by a specific reference in that requirement to the type of equipment involved. In the absence of such specific reference or if the term appliance is employed, it is to be understood that the requirement applies to all of the types of equipment covered by the standard.

1.3 These requirements cover cord-connected and permanently wired motor-operated appliances rated at a nominal 120 or 240 V including appliances supplied by low-voltage power supplies, and battery-operated appliances provided with battery chargers.

1.3 effective December 1, 2004

1.4 These requirements cover appliances for household use. The requirements in the Standard for Motor-Operated Commercial Food Preparing Machines, UL 763 are employed for the evaluation of appliances also intended for commercial application.

1.5 This standard does not cover sanitation, contamination, or noise aspects of these products. Reference to these items can be found in the Standard for Food, Drug and Beverage Equipment, ANSI/ASME F2.1.

1.6 An appliance employing a heating element is judged on the basis of its compliance with the requirements of this Standard, insofar as they apply and further appropriate requirements applicable to household cooking appliances.

2 Components

2.1 Except as indicated in 2.2, a component of a product covered by this standard shall comply with the requirements for that component. See Appendix A for a list of standards covering components generally used in the products covered by this standard.

2.2 A component is not required to comply with a specific requirement that:

a) Involves a feature or characteristic not required in the application of the component in the product covered by this standard, or

b) Is superseded by a requirement in this standard.

2.3 A component shall be used in accordance with its rating established for the intended conditions of use.

Documents
Document Sharing Hub

Full document details: UL 982 2006

2.4 Specific components are incomplete in construction features or restricted in performance capabilities. Such components are intended for use only under limited conditions, such as certain temperatures not exceeding specified limits, and shall be used only under those specific conditions.

3 Units of Measurement

3.1 Values stated without parentheses are the requirement. Values in parentheses are explanatory or approximate information.

4 Undated References

4.1 Any undated reference to a code or standard appearing in the requirements of this standard shall be interpreted as referring to the latest edition of that code or standard.

5 Glossary

5.1 For the purpose of this standard, the following definitions apply.

5.2 ATTENDED INTERMITTENT-DUTY HOUSEHOLD APPLIANCE – An appliance intended for infrequent and short-time use in residences and used only while attended. Food mixers and can openers are examples of this type of equipment.

5.3 CART – A stand – see 5.19 – provided with casters, wheels, rollers, or the like to make it mobile.

5.4 CASTER – A roller or swiveled wheel attached to a cart or stand that makes the cart or stand mobile.

5.5 CLOSED-TOP BLENDER CONTAINER – Food blending container with one opening that is used for securing the blade assembly.

5.6 COFFEE GRINDER – A motor operated appliance that crushes coffee beans into a powder by passing them through a system of closely fitting wheels or cones having serrated surfaces. This appliance will have an intake hopper and a discharge container.

5.7 COFFEE MILL – A motor operated appliance that chops coffee beans into a powder by means of a system of blades rotating at high speed.

5.8 COUNTER-SUPPORTED APPLIANCE – An appliance that is physically supported by a counter, table or bench during the performance of its intended electrically-operated functions, such as for a blender – blending, is to be considered a counter supported appliance. Reference is to be made to the specific product's Use and Care Literature in establishing the intended electrically-operated functions of the appliance.

5.9 DAMP LOCATION – Partially protected place or area where the appliance is either used or stored under canopies, marquees, roofed open porches, and like locations, and interior locations subject to moderate degrees of moisture, such as some basements, barns, and cold-storage warehouses.

5.10 DRY LOCATION – A place or area where the appliance is either used or stored not normally subject to dampness or wetness. A location temporarily subject to dampness or wetness, as in the case of a building under construction, is included in this category.

5.11 ENCLOSURE – That part of the appliance that:

Documents
Document Sharing Hub
Full document details: UL 982 2006

a) Renders inaccessible all or any parts of the equipment that may otherwise present a risk of electric shock; and/or

b) Reduces the likelihood of propagation of flame initiated by electrical disturbances occurring within.

5.12 FIXED APPLIANCE – An appliance that is fastened or otherwise secured at a specific location.

5.13 HAND-SUPPORTED APPLIANCE – An appliance that is physically supported by any part of the body of the user during the performance of its intended electrically-operated functions, such as for an electric knife – carving meat, is to be considered a hand-supported appliance. Reference is to be made to the specific product's Use and Care Literature in establishing the intended electrically-operated functions of the appliance.

5.14 INTERLOCK – A device or arrangement by means of which the functioning of one part is controlled by the functioning of another, for safety purposes.

5.15 LINE-VOLTAGE CIRCUIT – A circuit classified as line voltage for the purpose of this Standard is one involving a maximum potential of 250 V and having circuit characteristics in excess of those of a low-voltage circuit.

5.15 effective December 1, 2004

5.16 LOW-VOLTAGE CIRCUIT – A circuit classified as low voltage is one involving a peak open-circuit potential of not more than 42.4 V supplied by a primary battery, by a standard Class 2 transformer, or by a combination of a transformer and a fixed impedance which, as a unit, complies with all performance requirements for Class 2 transformers.

5.17 OPEN-TOP BLENDER CONTAINER – Food blending container with opening on the top provided with a separable cover.

5.18 PORTABLE APPLIANCE – An appliance that is actually moved or can easily be moved from one place to another in normal use. Some portable appliances, however, are not likely to be moved from one place to another in normal use.

5.19 STAND – A structure intended to support an appliance.

5.20 STATIONARY APPLIANCE – An appliance that is not easily moved from one place to another in normal use.

5.21 SUPPLEMENTARY OVERCURRENT PROTECTOR – A device designed to open the circuit automatically on a predetermined value of time versus current or voltage within the appliance. It is intended for use as overcurrent, or over- or under-voltage protection within the appliance where branch-circuit overcurrent protection is already provided.

5.22 WET LOCATION – A place or area where the appliance is either used or stored exposed to weather and unprotected.

Documents
Document Sharing Hub
Full document details: UL 982 2006

CONSTRUCTION

6 General

6.1 An appliance shall employ materials that are intended for the particular use and shall be made and finished with the degree of uniformity and grade of workmanship practicable in a well-equipped factory.

7 Frame and Enclosure

7.1 The frame and enclosure of an appliance shall be strong and rigid enough to resist the abuses likely to be encountered during normal service. The construction of the appliance shall preclude total or partial collapse with the attendant reduction of required minimum acceptable spacings, loosening or displacement of parts, and other serious defects which alone or in combination constitute an increase in the risk of fire, electric shock, or injury to persons.

7.2 An appliance shall be provided with enclosures of material acceptable for the particular application that shall house all electrical parts that may present a risk of fire or injury to persons under normal use and under reasonably foreseeable misuse.

7.3 Among the factors taken into consideration when an enclosure is being judged for acceptability are its:

a) Physical strength;

b) Resistance to impact;

c) Moisture-absorptive properties;

d) Combustibility;

e) Resistance to corrosion; and

f) Resistance to distortion at temperatures to which the enclosure may be subjected during conditions of normal or abnormal use.

For a nonmetallic enclosure, all of these factors are considered with respect to thermal aging.

7.4 The appliance enclosure shall house all moving parts except for those which need be exposed to perform their intended function, such as the beater blades to a mixer. See PROTECTION AGAINST PERSONAL INJURY.

7.5 Electrical parts of an appliance shall be so located or enclosed that protection against unintentional contact with uninsulated live parts will be provided.

7.6 The construction of an enclosure of a knife-sharpener (or a combination appliance having a knife-sharpening function, including an appliance provided with a mechanical sharpening block that is open to the motor or electrical compartment) shall preclude the drawing-in of filings developed during the sharpening function if such an event introduces a risk of fire or electric shock. See 39.3 – 39.5.

7.6 effective December 1, 2004

Documents
Document Sharing Hub

Full document details: UL 982 2006

7.7 The construction of an appliance intended for outdoor use shall be such as to prevent water from coming into contact with uninsulated live parts when the appliance is subjected to a test to simulate conditions that might occur during actual use. See Resistance to Moisture Test, Section 45.

Exception: This requirement is not applicable if the appliance is marked in accordance with 66.18 for outdoor use type.

7.8 An opening smaller than 1 inch (25.4 mm) in an enclosure is acceptable if a probe, as illustrated in Figure 7.1 when inserted point first into an opening, cannot be made to touch any uninsulated live part or film-coated wire. The probe shall be applied in all possible articulated positions.

Documents
Document Sharing Hub

Full document details: UL 982 2006

Figure 7.1
Probe

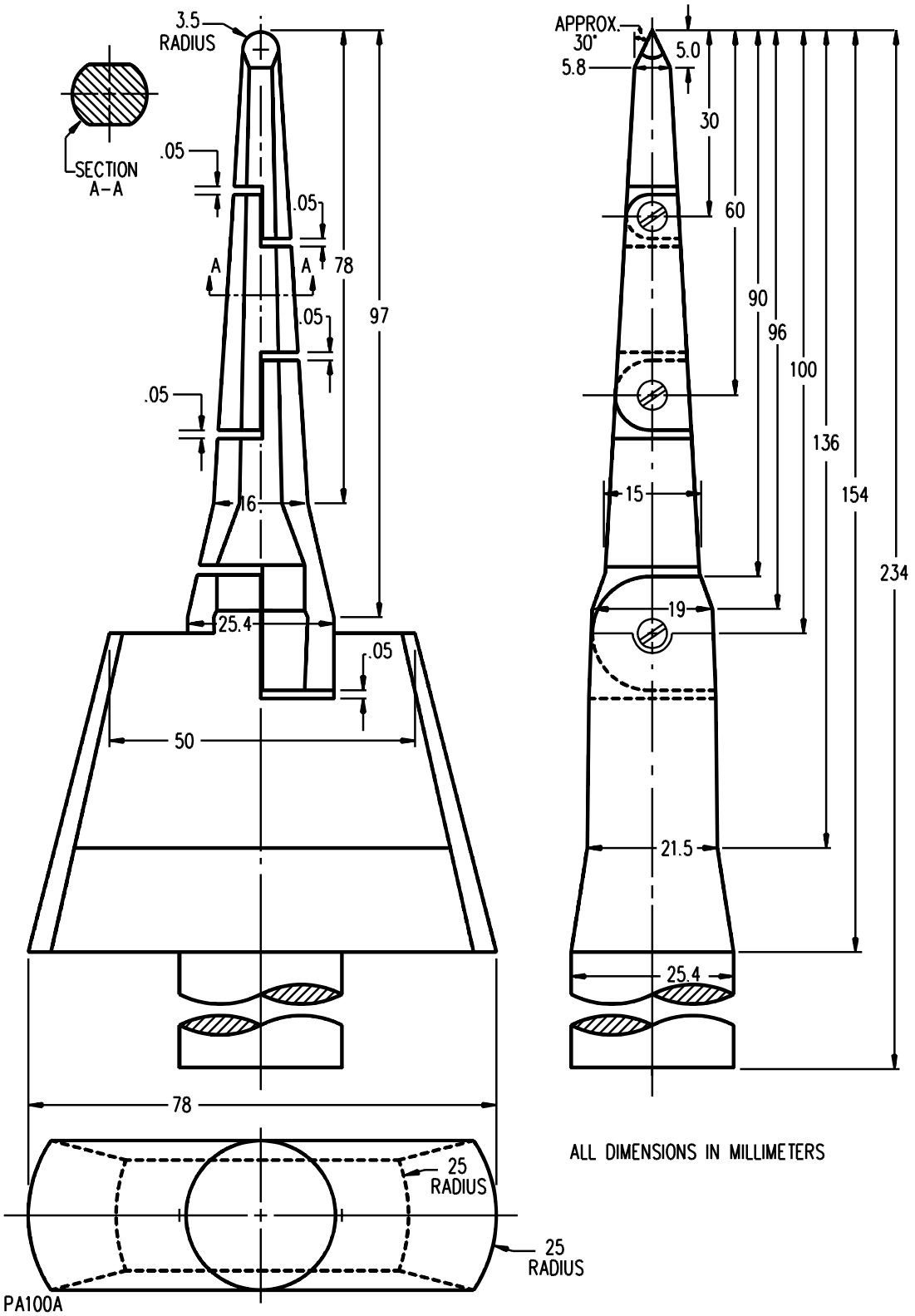

Documents
Document Sharing Hub
Full document details: UL 982 2006

7.9 An opening provided for hanging or mounting an appliance shall be so located or guarded that a nail, hook, or the like does not displace a part that creates a risk of fire or electric shock and does not contact one of the following:

a) An uninsulated live metal part;

b) Magnet wire;

c) Internal wiring;

d) Moving parts; or

e) Any other part likely to create a risk of fire or electrical shock.

7.10 An opening 1 inch (25.4 mm) or larger in an enclosure as illustrated in Figure 7.2 is acceptable if, within the enclosure, there is no uninsulated live part or magnet wire:

a) Less than X distance from the perimeter of the opening; as well as

b) Within the volume generated by projecting the perimeter X distance normal to its plane.

X equals 5 times the diameter of the largest diameter rod which can be inserted through the opening.

Figure 7.2
Opening in enclosure

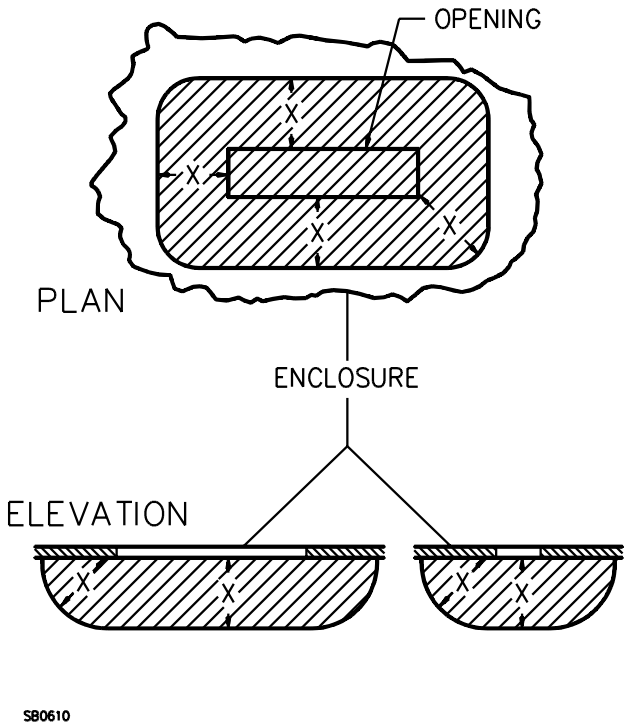

Documents
Document Sharing Hub
Full document details: UL 982 2006

7.11 During the examination of an appliance in connection with the requirements in 7.2– 7.5 any part of the enclosure is to be disregarded – that is, it will not be assumed that the part in question affords protection against electric shock or injury to persons – if it either:

a) Must be opened or removed, with or without the use of tools, to perform manufacturer's recommended user servicing, maintenance, operating adjustments, attachment of accessories, or other instructions; or

b) Can be opened or removed without the use of tools.

Exception: A part that requires a tool for opening or removal to perform manufacturer's recommended user servicing, maintenance, operating adjustments, attachment of accessories, or other instructions is to remain in place if the appliance is marked in accordance with 65.7.

7.12 The enclosure of an automatically controlled appliance shall prevent molten metal, burning insulation, flaming particles, or the like from falling on combustible materials, including the surface upon which the appliance is supported. See 16.2.2.

7.13 The requirement in 7.12 will necessitate the use of a barrier material that resists ignition:

a) Under a motor unless:

1) The structural parts of the motor or of the appliance provide the equivalent of such a barrier;

2) The protection provided with the motor is such that no burning insulation or molten material falls to the surface that supports the appliance when the motor is energized under each of the following fault conditions:

i) Open main winding;

ii) Open starting winding;

iii) Starting switch short-circuited; and

iv) For a permanent-split-capacitor motor the capacitor is short circuited. The short circuit is to be applied before the motor is energized and the rotor is to be blocked; or

3) The motor is provided with a thermal motor protector (a protective device that is sensitive to temperature and current) that will prevent the temperature of the motor windings from becoming more than 125°C (257°F) under the maximum load under which the motor will run without causing the protector to cycle and from becoming more than 150°C (302°F) with the rotor of the motor locked; and

b) Under wiring, unless it is neoprene- or thermoplastic-insulated.

It will also necessitate that a switch, relay, solenoid, or the like be individually and completely enclosed, except for terminals, unless it can be shown that malfunction of the component would not result in a possible fire or there are no openings in the bottom of the appliance enclosure.

Documents
Document Sharing Hub
Full document details: UL 982 2006

7.14 The barrier mentioned in 7.13 shall be horizontal, shall be located as indicated in Figure 7.3, and shall not be an area less than that described in that illustration. Openings for drainage, ventilation, and the like may be employed in the barrier, provided that such openings would not permit molten metal, burning insulation or the like to fall on combustible material.

Documents
Document Sharing Hub

Full document details: UL 982 2006

Figure 7.3
Location and extent of barrier

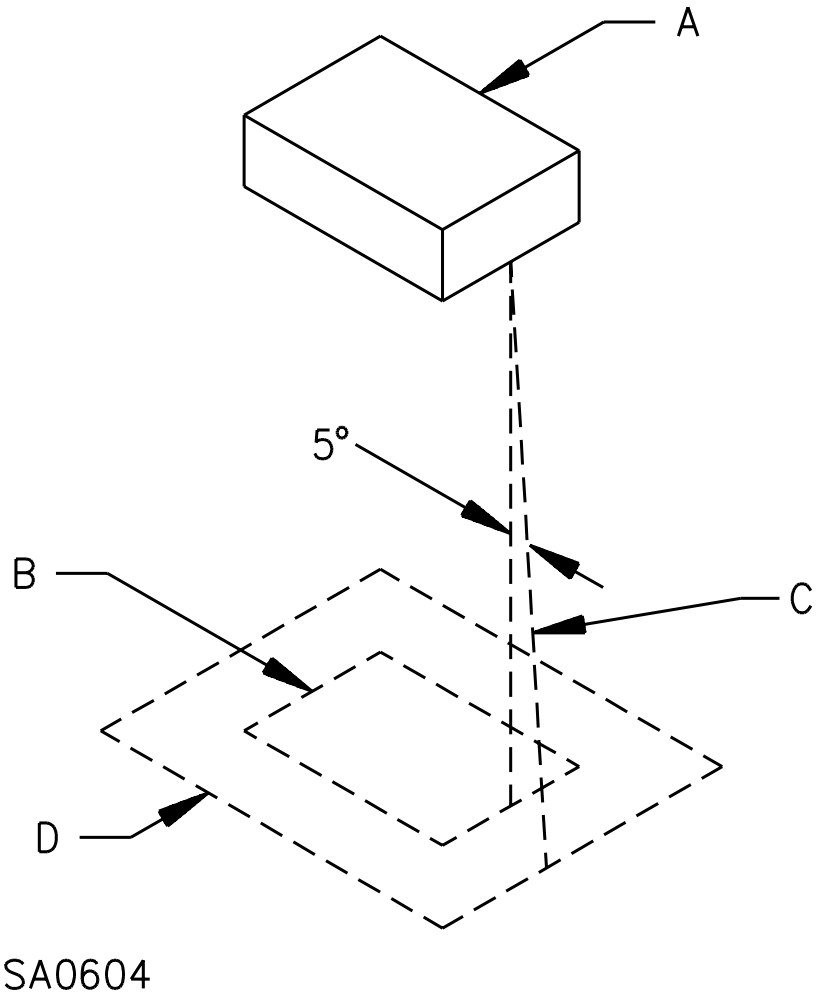

Notes:

A – Region to be shielded by barrier. This will consist of the entire component if it is not otherwise shielded, and will consist of the unshielded portion of a component that is partially shielded by the component enclosure or equivalent.

B – Projection of outline of component on horizontal plane.

C – Inclined line that traces out minimum area of barrier. When moving, the line is always:

a) Tangent to the component;

b) 5 degrees from the vertical; and

c) So oriented that the area traced out on a horizontal plane is maximum.

D – Location (horizontal) and minimum area for barrier. The area is that included inside the line of intersection traced out by the inclined line C and the horizontal plane of the barrier.

Documents
Document Sharing Hub
Full document details: UL 982 2006

7.15 The arrangement and guarding of parts of an appliance shall permit easy and proper installation and removal of strainers, baskets, and the like that must be removed, cleaned, and refilled by the user. The removal and replacement of these vessels and their ingredients shall not result in damage to or contamination of wiring, electrical components, or other parts.

7.16 The assembly described in 7.15 shall be such as to minimize the likelihood of spillage on live parts, including magnet wire.

7.17 Cast- and sheet-metal portions of the enclosure shall not be thinner than indicated in Table 7.1 unless the enclosure is found to be acceptable when judged under considerations such as those mentioned in 7.3 and 7.18.

Table 7.1
Minimum acceptable thicknesses of enclosure metal

	At small, flat, unreinforced surfaces and at surfaces that are reinforced by curving, ribbing, and the like (or are otherwise of a shape and/or size) to provide adequate physical strength		At surfaces to which a wiring system is to be connected in the field		At relatively large unreinforced flat surfaces	
Enclosure metal	**Inches**	**(mm)**	**Inches**	**(mm)**	**Inches**	**(mm)**
Die-cast metal	3/64	1.2	–	–	5/64	2.0
Cast malleable iron	1/16	1.6	–	–	3/32	2.4
Other cast metal	3/32	2.4	–	–	1/8	3.2
Uncoated sheet steel	0.026[a]	0.66[a]	0.032	0.81	0.026	0.66
Galvanized sheet steel	0.029[a]	0.74[a]	0.034	0.86	0.029	0.74
Nonferrous sheet metal	0.036[a]	0.91[a]	0.045	1.14	0.036	0.91

[a] Thinner sheet metal may be employed if found to be acceptable when the enclosure is judged under considerations such as those mentioned in 7.3 and 7.18.

7.18 In addition to being considered with reference to the factors mentioned in 7.3 an enclosure of sheet metal is to be judged with respect to its size, shape, and the thickness of metal considering the intended use of the appliance.

7.19 A cord-connected appliance that is provided with keyhole slots, notches, hanger holes, and the like for hanging on a wall shall be constructed in such a manner that the hanging means shall not be accessible without removing the appliance from the wall.

Exception: A separate wall mounted battery charger for use with an appliance shall comply with the requirements in the Standard for Battery Chargers for Charging Engine-Starter Batteries, UL 1236.

Documents
Document Sharing Hub
Full document details: UL 982 2006

7.20 Cord connected wall-mounted appliances employing a permanently fastened mounting bracket shall be removable from the bracket without the use of a tool.

8 Overcurrent-Protective Devices

8.1 A protective device shall be wholly inaccessible from outside the appliance except that the operating handle of a circuit breaker, the operating button of a manually operable motor protector, and similar parts may project outside the appliance enclosure.

8.2 If an appliance is provided with a single-pole overcurrent protective device and is required to employ a polarized plug, the overcurrent protective device shall be connected to the ungrounded conductor of the power-supply cord of an appliance. Table 11.3 specifies the polarity identification of the power-supply cord conductors.

Exception: For portable, non-automatically starting appliances employing a motor rated 1-hp or less intended to be operated on a nominal 120 volts branch circuit and employing a plug rated at 15-amperes, an overcurrent protective device within the appliance is not prohibited from being located in either conductor of the power-supply cord, when the overcurrent protective device acts only as a supplementary overcurrent protector.

9 Mechanical Assembly

9.1 An appliance shall be so assembled that it will not be affected adversely by the vibration of normal operation. Brush caps shall be tightly threaded or otherwise designed to prevent loosening.

9.2 A switch, a lampholder, and attachment-plug receptacle, a motor-attachment plug, or similar components shall be mounted securely, and, except as noted in 9.3 and 9.4, shall be prevented from turning. See 9.5.

9.3 The requirement that a switch be prevented from turning may be waived if all four of the following conditions are met:

a) The switch is to be of a plunger or other type that does not tend to rotate when operated (a toggle switch is considered to be subject to forces that tend to turn the switch during normal operation of the switch);

b) The means for mounting the switch makes it unlikely that operation of the switch will loosen it;

c) The spacings are not to be reduced below the minimum required if the switch rotates; and

d) The normal operation of the switch is to be by mechanical means rather than by direct contact by persons.

9.4 A lampholder of the type in which the lamp cannot be replaced (such as a neon pilot or indicator light in which the lamp is sealed in a nonremovable jewel) need not be prevented from turning if rotation cannot reduce spacings below the minimum required values.

Documents
Document Sharing Hub
Full document details: UL 982 2006

9.5 The means for preventing the turning mentioned in 9.2 is to consist of more than friction between surfaces – for example, a lock washer, properly applied, is acceptable as the means for preventing a small stem-mounted switch or other device having a single-hole mounting means from turning.

9.6 Small molded parts such as brush caps, shall be constructed to have the mechanical strength and rigidity to withstand the stresses of actual service. Brush caps shall be secured or located to be protected from mechanical damage which might result during normal use.

9.7 Receptacles mounted to and supported by a cover shall be secured by more than one screw or shall be a device assembly or box cover intended for securing by a single screw.

10 Protection Against Corrosion

10.1 Except as noted in 10.2, iron and steel parts shall be protected against corrosion by enameling, galvanizing, plating, or other equivalent means, if the failure of such unprotected parts would be likely to result in a condition that can cause risk of fire, electric shock or injury to persons.

10.2 In certain instances where the oxidation of iron or steel due to the exposure of the metal to air and moisture is not likely to be appreciable – thickness of metal and temperature also being factors – surfaces of sheet steel within an enclosure and the inside surface of sheet steel enclosures may not be required to be protected against corrosion. The requirement in 10.1 does not apply to bearings, cast-iron parts, laminations, and shafts or to minor parts of iron or steel as washers, screws, and the like.

11 Power Supply Connections – Cord-Connected Appliances

11.1 Cords and plugs

11.1.1 A cord-connected appliance (an appliance intended to be connected to the power-supply circuit by means of a flexible cord) shall be provided with an appropriate length of flexible cord and an attachment plug for connection to the supply circuit.

11.1.2 The flexible cord may be attached permanently to an appliance or may be in the form of a detachable power-supply cord with appropriate means for connection to the appliance. A hand-supported appliance employing a detachable power-supply cord shall include a positive means for retaining the appliance coupler body to the appliance during use. Typical retaining means may include a friction type fit coupled with a rib-type construction, snap-type fit or similar techniques. Friction type fit alone does not meet the intent of the requirement.

Exception No. 1: A hand-held appliance is not required to employ a retaining means if the supply voltage is 30 V (42 V peak) or less.

Exception No. 2: A hand-held appliance rated over 30 V (42 V peak) is not required to employ a retaining means if it complies with the requirements for Appliance Coupler Retention, Section 56.

11.1.3 Except as noted in 11.1.4, 11.1.5, and 11.1.6, the flexible cord provided on a portable, under-cabinet or wall-mounted appliance shall be Type HPN, SPT-2, SVO, SVT, SVTO, or shall be of a type at least equally as serviceable for the particular application including its resistance to oil for the particular application. Rubber insulated cords shall be an oil resistant type.

Documents
Document Sharing Hub
Full document details: UL 982 2006

11.1.4 The flexible cord on a knife sharpener and on a battery-charger unit from which a battery-operated appliance is removed for use may be Type SPT-1.

11.1.5 A hand-supported product weighing 1.50 lb (0.68 kg) or less and having a power supply cord of the coiled type and a maximum extended length of 7.0 ft (2.1 m), may employ a Type SPT-1 cord, or shall be of a type at least equally as serviceable for the particular application including its resistance to oil.

11.1.6 A flexible cord on an appliance intended for outdoor use, shall be:

a) An outdoor use type (suffix W); and

b) At least a Type SJW or SJTW.

11.1.7 The flexible power-supply cord shall not be smaller than 18 AWG (0.82 mm^2), shall be rated for use at a voltage not less than the rated voltage of the appliance, and shall have an ampacity as given in Table 400-5(A) of the National Electrical Code, ANSI/NFPA 70, not less than the current rating of the appliance. For reference purposes, an abbreviated table showing the ampacities for flexible cord with two current-carrying copper conductors is shown in Table 11.1.

Table 11.1
Ampacities for flexible cords

Conductor size		Ampacity (Amperes)
AWG	(mm^2)	
18	(0.82)	10
17	(1.04)	12
16	(1.31)	13
14	(2.08)	18
12	(3.31)	25

11.1.8 The power supply cord length shall be as outlined in Table 11.2.

Table 11.2
Power supply cord lengths

Type of appliance	Minimum acceptable length		Maximum acceptable length	
	Feet	Meters	Feet	Meters
Intended for outdoor use	6	1.82	–	–
Hand-supported[1]	5	1.52	–	–
Counter-supported	2	0.61	–	–
Floor-supported cart or stand	6	1.82	–	–
Wall-mounted	2	0.61	4.5[2]	1.4[2]

[1] See also 11.1.5.
[2] The cord may have a maximum length of 7 ft (2.1 m), if a means is provided for storing the excess length of cord.

11.1.9 The attachment plug shall be of a type with a current rating not less than the rated current of the appliance, and the voltage rating equal to the rated voltage of the appliance.

Documents
Document Sharing Hub
Full document details: UL 982 2006

11.1.10 The attachment plug of the power-supply cord of an appliance intended to be connected to a nominal 120 V circuit, and provided with a 15- or 20-ampere general-use receptacle shall be of the 3-wire grounding type. The attachment plug of the power-supply cord of an appliance provided with a manually operated, line-connected, single pole switch for appliance ON-OFF operation or an Edison-base lampholder shall be of the 2-wire polarized or 3-wire grounding type.

11.1.11 If a 3-wire grounding-type attachment plug or a 2-wire polarized attachment plug is provided on an appliance intended to be connected to a nominal 120 V circuit, the attachment plug connections shall comply with Figure 11.1 and the polarity identification of the flexible cord shall comply with Table 11.3.

Documents
Document Sharing Hub

Full document details: UL 982 2006

Figure 11.1
Connection to attachment plugs

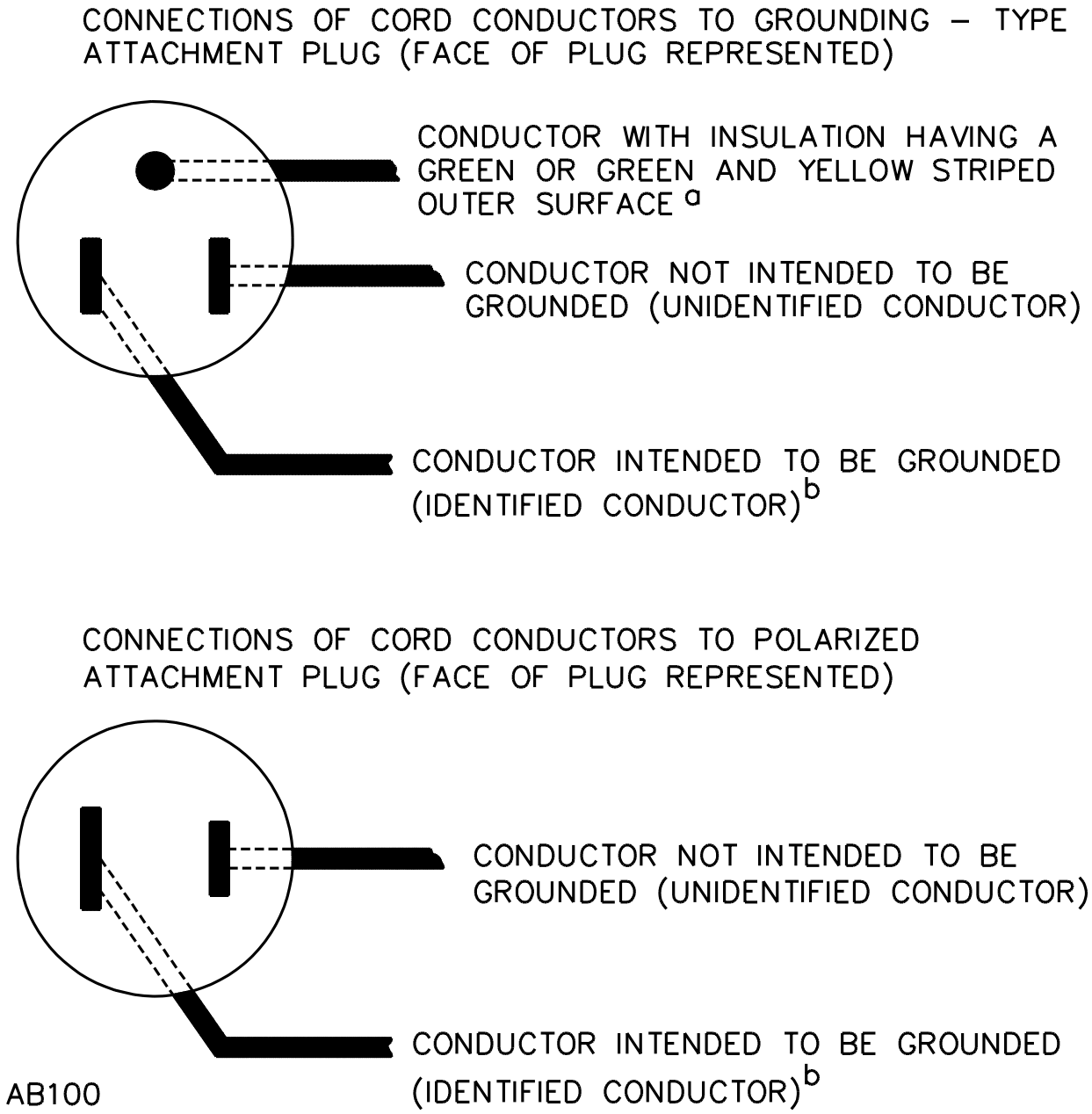

[a] The blade to which the green conductor is connected may have a U-shaped or circular cross section.

[b] Signifies a conductor identified in accordance with Table 11.3.

Documents
Document Sharing Hub
Full document details: UL 982 2006

Table 11.3
Polarity identification of flexible cords

Method of identification	Acceptable combinations		
		Conductor intended to be grounded[a, b]	All other conductors[a]
Color of braids on individual conductors	A	Solid white or gray– without tracer	Solid color other than white or gray – without tracer
	B	Color other than white or gray, with tracer in braid	Solid color other than white or gray – without tracer
Color of insulation on individual conductors	C[c]	Solid white or gray	Solid color other than white or gray
	C1[d]	Solid light blue	Solid color other than light blue, white, or gray
Color of separators	D[d]	White or gray	Color other than white or gray
Other means	E[e]	Tin or other white metallic coating on all strands of the conductor	No tin or other white metallic coating on the strands of the conductor
	F[e]	A stripe, ridge, or groove on the exterior surface of the cord	

[a] A conductor finished to show a green color with or without one or more yellow stripes or tracers is to be used only as an equipment grounding conductor.
[b] The grounded (identified) conductor is the neutral supply conductor.
[c] Only for cords – other than Types SP-1, SP-2, SPT-1, and SPT-2 – having no braid on any individual conductor.
[d] For jacketed cord.
[e] Only for Types SP-1, SP-2, SPT-1, and SPT-2 cords.

11.1.12 The attachment plug of the power-supply cord of an appliance shall have an ampacity not less than the rated current of the appliance, or the input current under maximum normal load conditions, whichever is greater, and a voltage rating not less than the rated voltage of the appliance. When an appliance is able to be adapted for use on two or more different values of voltage by field alteration of internal connections, the attachment plug provided with the appliance shall be rated for the voltage for which the appliance is connected when shipped from the factory.

11.1.12 effective December 1, 2004

11.1.13 The conductor of the power-supply cord that is intended to be grounded shall have the following items connected to it:

a) The screw shell of an Edison-base lampholder; and

b) The terminal or lead of a receptacle intended to be grounded.

Table 11.3 identifies the supply cord conductor intended to be grounded.

11.1.14 An appliance employing a polarized detachable power-supply cord shall not accommodate a non-polarized cord.

Documents
Document Sharing Hub
Full document details: UL 982 2006

11.2 Pin terminals

11.2.1 An appliance intended for use with a detachable power-supply cord shall not be provided with terminal pins that will accommodate a standard flatiron or appliance plug.

11.2.2 If an appliance is provided with pin terminals, the construction of the appliance shall be such that live parts will not be exposed to unintentional contact both during and after normal placement of the intended female fitting on the pins.

11.2.3 A pin guard is required, such that:

a) A straight edge nominally 1/16 inch (1.6 mm) thick placed in any position, across and in contact with edges of the pin terminal opening without the fitting cannot be made to contact any current-carrying pin; and

b) With the fitting aligned with the pins and the face of the fitting in a plane located perpendicular to the end or ends of the farthest projecting current-carrying pins, the probe illustrated in Figure 7.1 shall not touch any current-carrying pin while the probe is inserted through any opening which is then present.

11.3 Strain relief

11.3.1 Strain relief shall be provided to prevent a mechanical stress on a flexible cord from being transmitted to terminals, splices, or interior wiring. See 54.1

11.3.2 A clamp may be used on Types SPT-1, SPT-2, SVT and SVTO flexible cords protected by varnished-cloth tubing, phenolic, vulcanized fiber or the equivalent under the clamp, if the strain relief assembly complies with the requirements in 54.3. Thermoplastic tubing is not acceptable over thermoplastic cords.

Exception: A non-metallic clamp may be used on Types SPT-1, SPT-2, SVT, and SVTO flexible cords without tubing, fiber or equivalent protection under the clamp if it complies with the requirements in 54.3.

11.3.3 Means shall be provided to prevent the supply cord from being pushed into the enclosure of an appliance through the cord-entry hole when such displacement results in:

a) Subjecting the supply cord to mechanical damage;

b) Exposing the supply cord to a temperature higher than that for which it is rated;

c) Reducing spacings (such as to a metal strain-relief clamp) below the minimum required values; or

d) Damaging internal connections or components.

To determine compliance, the supply cord shall be tested in accordance with Section 55, Push Back Relief Test.

Documents
Document Sharing Hub
Full document details: UL 982 2006

11.3.4 The flexible cord shall be restrained from any rotation that causes movement of internal wiring at splices and terminals.

11.3.5 If a knot in a flexible cord serves as strain relief, a surface with which the knot may come in contact shall be free from projections, sharp edges, burrs, fins, and the like, which may cause abrasion of the insulation of the conductors.

11.4 Cord bushings

11.4.1 At a point where a flexible cord or internal wiring passes through an opening in a wall, barrier, or enclosing case, and if subject to motion (flexing), there shall be an appropriate bushing or the equivalent which shall be substantial, reliably secured in place, and shall have a smooth, well-rounded surface against which the insulation may bear. If Type SPT-1 or SPT-2 is employed, if the wall or barrier is of metal, and if the construction is such that the cord may be subjected to strain or motion an insulating bushing shall be provided.

11.4.2 If the cord hole is in wood, porcelain, phenolic composition, or other nonconducting material, a smooth, well-rounded surface is considered to be equivalent to a bushing.

11.4.3 Vulcanized fiber may be employed if the bushing is not less than 3/32 inch (2.4 mm) thick and is so formed and secured in place that it will not be affected adversely by moisture in normal use of the appliance.

11.4.4 At any point in an appliance, a bushing of the same material as, and molded integrally with the supply cord is acceptable on a Type SPT-1 or heavier cord if the built-up section is not less than 1/16 inch (1.6 mm) thick at the point where the cord passes through the enclosure.

11.4.5 An insulated metal grommet may be accepted instead of an insulating bushing, provided that the insulating material used is not less than 1/32 inch (0.8 mm) in thickness and fills completely the space between the grommet and the metal in which it is mounted.

12 Power Supply Connections – Permanently-Connected Appliances

12.1 General

12.1.1 Except as noted in 12.1.3, a permanently connected appliance (an appliance intended for permanent connection to the power supply) shall have provision for connection of one of the wiring systems that, in accordance with the National Electrical Code, ANSI/NFPA 70, is appropriate for the appliance.

12.1.2 Sheet metal to which a wiring system is to be connected in the field shall have a minimum thickness of 0.032 inch (0.81 mm) if uncoated steel, a minimum thickness of 0.034 inch (0.86 mm) if galvanized steel, and a minimum thickness of 0.045 inch (1.14 mm) if nonferrous.

12.1.3 A stationary appliance may be acceptable if provided with a short length (a maximum of 8 ft or 2.44 m) of Type S, SO, ST, or STO cord and an attachment plug for supply connection. The investigation of such a feature will include consideration of the utility of the appliance and the necessity of having it readily detachable from its source of supply by means of the plug.

Documents
Document Sharing Hub
Full document details: UL 982 2006

12.1.4 A terminal compartment or box in which connections to the power supply circuit will be made shall be located such that:

a) During the making of and inspection of electrical connections in the compartment, internal wiring and electrical components will not be exposed to mechanical abuse or stress; and

b) After the appliance has been installed as intended, such connections will be readily accessible for inspection.

12.1.5 A terminal compartment shall be so attached to the appliance as to be prevented from turning with respect to the wiring terminals.

12.2 Wiring terminals

12.2.1 A wiring terminal is considered to be a terminal to which a wire may be connected in the field, unless the wire and a means of making the connection (a pressure terminal connector, soldering lug, soldered loop, crimped eyelet, and the like), factory-assembled to the wire, are provided as a part of the appliance.

12.2.2 A permanently connected appliance shall be provided with wiring terminals for the connection of the conductors having an ampacity in accordance with the National Electrical Code, ANSI/NFPA 70, or the appliance shall be provided with leads for such connection.

12.2.3 A wiring terminal shall be provided with a soldering lug or pressure terminal connector securely fastened in place (for example, firmly bolted or held by a screw), except that a wire-binding screw may be employed at a wiring terminal intended to accommodate a 10 AWG (5.3 mm^2) or smaller conductor if upturned lugs or the equivalent are provided to hold the wire in position.

12.2.4 A wiring terminal shall be prevented from turning.

12.2.5 Except as noted in 12.2.6, the free length of a lead inside an outlet box or wiring compartment shall be 6 inches (152 mm) or more if the lead is intended for field connection to an external circuit.

12.2.6 The lead may be less than 6 inches (152 mm) in length if it is evident that the use of a longer lead might result in an adverse condition.

12.2.7 A wire-binding screw at a wiring terminal shall not be smaller than No. 10, except that a No. 8 screw may be used at a terminal intended for the connection of a 14 AWG (2.1 mm^2) or smaller conductor, and a No. 6 screw may be used for the connection of a 16 or 18 AWG (1.3 or 0.82 mm^2) conductor. See 12.2.8.

12.2.8 It should be noted that, according to the National Electrical Code, ANSI/NFPA 70, 14 AWG (2.1 mm^2) is the smallest conductor that may be used for branch-circuit wiring, and thus is the smallest conductor that may be anticipated at a terminal for connection of a power-supply wire.

12.2.9 A terminal plate tapped for a wire-binding screw shall be of metal with a minimum thickness of 0.050 inch (1.27 mm) and shall not have less than two full threads in the metal, except that a special alloy plate a maximum of 0.050 inch (1.27 mm) thick and a minimum of 0.030 inch (0.76 mm) thick is acceptable if the tapped threads have appropriate mechanical strength.

Documents
Document Sharing Hub
Full document details: UL 982 2006

12.2.10 A terminal plate formed from stock having the minimum required thickness, as given in 12.2.9, may have the metal extruded at the tapped hole to provide two full threads for the binding screw.

12.2.11 Upturned lugs or a cupped washer shall be capable of retaining a supply conductor of the size indicated in 12.2.2 under the head of the screw or washer.

12.2.12 A wire-binding screw shall thread into metal.

12.3 Grounded terminals and leads

12.3.1 A permanently connected appliance employing a lampholder of the Edison-screw-shell type, or a single-pole switch or overcurrent protective device other than an automatic control, shall have one terminal or lead identified for the connection of the grounded conductor of the supply circuit. The identified terminal or lead shall be the one that is electrically connected to screw shells of lampholders and to which no switches or overcurrent protective devices of the single-pole type other than automatic controls without a marked OFF position are connected.

12.3.2 A terminal intended for the connection of a grounded supply conductor shall be of or plated with metal that is substantially white in color and shall be readily distinguishable from the other terminals, or proper identification of that terminal shall be clearly shown in some other manner, such as on an attached wiring diagram. A lead intended for the connection of a grounded power-supply conductor shall be finished white or natural grey color and shall be readily distinguishable from the other leads.

12.3.3 The surface of an insulated lead intended solely for the connection of an equipment-grounding conductor shall be green with or without one or more yellow stripes, and no other lead shall be so identified.

12.3.4 A terminal solely for connection of an equipment-grounding conductor shall be capable of securing a conductor of the size intended for the particular application, in accordance with the National Electrical Code, ANSI/NFPA 70.

12.3.5 A wire-binding screw intended for the connection of an equipment grounding conductor shall be identified by:

a) Use of a green-colored head that is slotted or hexagonal, or both; or

b) The grounding symbol illustrated in Figure 12.1 on or adjacent to the terminal or on a wiring diagram provided on the product.

Documents
Document Sharing Hub

Full document details: UL 982 2006

Figure 12.1
Grounding symbol

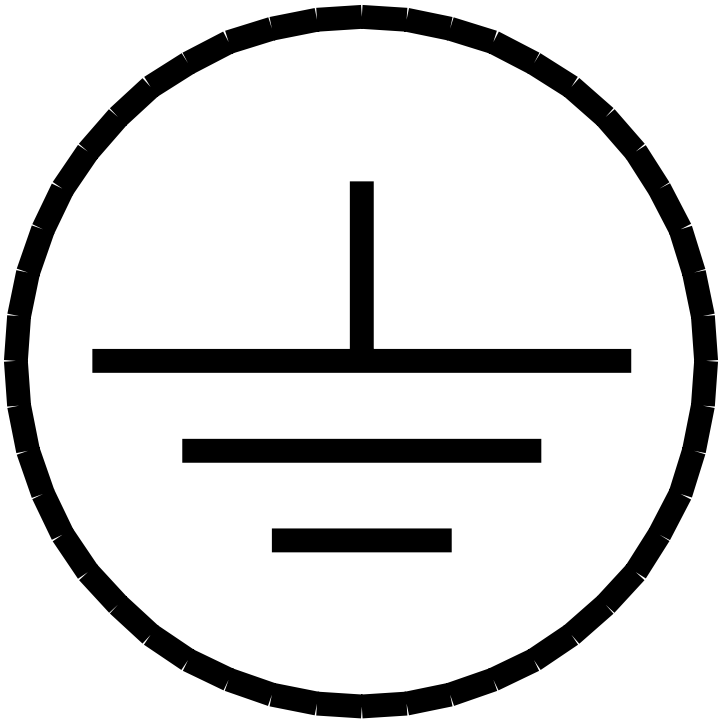

12.3.6 A pressure wire connector intended for the connection of such a conductor shall be identified by:

a) Being marked ″G,″ ″GR,″ ″GND,″ ″ Ground,″ ″Grounding,″ or the like; or

b) A marking on a wiring diagram provided on the appliance; or

c) The grounding symbol illustrated in Figure 12.1 on or adjacent to the terminal or on a wiring diagram provided on the product.

12.3.7 The wire binding screw or pressure wire connector shall be located that it is unlikely to be removed during servicing of the appliance.

Documents
Document Sharing Hub

Full document details: UL 982 2006

13 Internal Wiring

13.1 The internal wiring and connections between parts of an appliance shall be enclosed or guarded, except that a length of flexible cord may be employed for external connections if flexibility is essential.

13.2 For the purpose of these requirements the internal wiring of an appliance is considered to be all the interconnecting wiring from the point where the power-supply cord of a cord-connected appliance enters the enclosure, or from the wiring terminals or leads for power-supply connections of a fixed appliance, even though some of this may be in the form of flexible cord.

13.3 The protection of insulated wiring and of wire providing grounding continuity, as required by 13.1, is considered to exist if, when judged as though it were magnet wire, the wiring is acceptable according to 7.8. Internal wiring not so protected may be accepted if it is so secured within the enclosure that it is unlikely to be subjected to stress or physical abuse.

13.4 Unless it is to be judged as an uninsulated live part, insulated internal wiring of an appliance (including a grounding conductor) shall consist of wire that is appropriate for the particular application, when considered with respect to:

a) The temperature and voltage to which the wiring is likely to be subjected;

b) Exposure to oil, grease, or other substances likely to have a deleterious effect on the insulation;

c) Exposure to moisture; and

d) Other conditions of service to which it is likely to be subjected.

13.5 Thermoplastic-insulated wire employed for internal wiring shall be standard building wire or appliance-wiring material that is provided with insulation appropriate for the purpose.

13.6 Wiring shall be protected from sharp edges (including male screw threads), burrs, fins, moving parts, and other agents that might abrade the insulation of conductors.

13.7 A hole by which insulated wires pass through a sheet metal wall within the overall enclosure shall be provided with a smoothly rounded bushing or shall have smooth surfaces, free of burrs, fins, sharp edges, and the like, upon which the wires may bear, to prevent abrasion of the insulation.

13.8 Insulated wires may be bunched and passed through a single opening in a metal wall within the enclosure of the appliance.

13.9 All splices and connections shall be mechanically secure and shall provide an effective electrical contact.

13.10 A soldered connection shall be such that mechanical security will be provided. If the nature and/or location of a soldered connection is such that loosening of the solder is likely to occur, and if such loosening of the solder will result in any grounding or short-circuiting of live parts or other adverse condition, the connection shall be made mechanically secure before being soldered.

Documents
Document Sharing Hub

Full document details: UL 982 2006

13.11 A wire-binding screw or nut shall be provided with means to prevent it from being loosened due to vibration if such loosening might result in a risk of fire, electric shock or injury to persons.

13.12 A risk of fire, electric shock or injury to persons is not considered to result if a spade lug with upturned ends or a closed-loop lug is used.

13.13 Unless spacings cannot be reduced so as to create a risk of fire, electric shock or injury to persons, a splice shall be provided with insulation equivalent to that of the wires involved.

13.14 In a determination of whether or not splice insulation consisting of coated-fabric, thermoplastic, or other material is acceptable, consideration is to be given to such factors as its dielectric properties, heat-resistance and moisture-resistance characteristics, and the like. Thermoplastic insulating tape wrapped over a sharp edge is not acceptable. An insulated splicing device is acceptable within the limits of its voltage and temperature ratings.

13.15 Stranded internal wiring shall be so connected to a wire-binding screw that loose strands of wire will be prevented from contacting other live parts not always of the same polarity as the wire and from contacting dead metal parts. This may be accomplished by use of pressure thermal connectors, soldering lugs, crimped eyelets, soldering all strands of the wire together, or other equivalent means.

13.16 An internal wiring bushing of neoprene or polyvinyl chloride may be used anywhere inside an appliance if the edges of the hole in which the bushing is mounted are smooth and free from burrs, fins and the like.

14 Live Parts

14.1 A current-carrying part shall be of silver, copper, a copper alloy or other material equivalent for the purpose.

14.2 Plated iron or steel may be used for a current-carrying part:

a) Whose temperature during normal operation is more than 100°C (212°F);

b) Within a motor or associated governor; or

c) If acceptable in accordance with 2.1.

Plain (unplated) iron or steel is not acceptable. The foregoing restrictions do not apply to stainless steel and other corrosion-resistant alloys.

14.3 An uninsulated live part shall be so secured to the base or mounting surface that it will be prevented from turning or shifting in position if such motion may result in a reduction of spacings below the minimum acceptable values.

14.4 Friction between surfaces is not acceptable as the sole means to prevent the turning of a live part, but a lock washer properly applied is acceptable for this purpose.

Documents
Document Sharing Hub

Full document details: UL 982 2006

15 Electrical Insulation

15.1 Insulating washers, bushings, and the like, and bases or supports for the mounting of live parts shall be of a moisture-resistant material that is acceptable for the particular application.

15.2 Insulating material employed in an appliance is judged with respect to its use in the particular application. Materials such as mica, some molding compounds, and certain refractory materials are capable of being used as the sole support of current-carrying parts; and some other materials that are not intended for general use, such as magnesium oxide, are capable of being used in conjunction with other insulating materials when so located and protected such that the risk of physical injury and the absorption of moisture are reduced. If a separate investigation is required to determine the fitness of a material as an insulator, the key factors to be examined are its physical strength, dielectric-properties, insulation-resistance, heat-resistant qualities, the degree to which it is enclosed or protected, and any other features pertinent to the risk of electric shock, fire and injury to persons involved, in conjunction with the conditions of actual service. All of the properties mentioned above are to be investigated with respect to the effects of thermal aging.

15.3 Screws or other fastenings used to mount or support small fragile, insulating parts are not to be so tight as to crack or break such parts with expansion and contraction.

15.4 Vulcanized fiber may be used for insulating bushings, washers, separators, and barriers, but not as the sole support for uninsulated live parts if shrinkage, moisture absorption, or warpage may introduce current leakage or other adverse conditions. Thermoplastic materials may be employed for the sole support of uninsulated live parts if found to have physical strength and rigidity, resistance to heat, resistance to flame propagation, dielectric strength, and other properties appropriate for the application. All of the properties mentioned above are to be considered with respect to the effects of thermal aging.

15.5 A small molded part, such as a terminal block, shall have such physical strength and rigidity that it will withstand the stresses of actual service.

16 Motors

16.1 General

16.1.1 A motor shall be acceptable for the particular application, and shall be capable of handling the ″maximum normal load″ of the appliance as described in 36.1.11 – 36.26.2 without introducing a risk of fire, electric shock, or injury to persons.

16.1.2 A motor winding shall be resistant to the absorption of moisture and shall be formed and assembled in a uniform manner, such as free of loose turns, irregular crossovers, and poor ties.

16.1.3 With reference to the requirement in 16.1.2, magnet wire is not required to be additionally treated to resist absorption of moisture, but fiber slot liners, cloth coil wrap and similar moisture-absorptive materials should be provided with impregnation or otherwise treated to resist moisture absorption.

16.1.4 A brush holder assembly shall be constructed so that if a carbon brush becomes worn away to the maximum possible extent, the spring or other parts of the assembly shall not defeat the required spacings between live parts and dead metal parts, or result in a live part becoming accessible.

Documents
Document Sharing Hub
Full document details: UL 982 2006

16.1.5 Motors that are provided with thermoplastic coil forms or thermoplastic insulating material shall comply with the requirements for Thermoplastic Coil Forms and Thermoplastic Insulating Material, Section 60.

16.2 Overload protection

16.2.1 An appliance employing a motor rated at 1 hp or less and intended to be automatically controlled, as indicated in 16.2.2, shall incorporate thermal or overcurrent protection in accordance with 16.2.5.

16.2.2 An appliance is considered to be automatically controlled under any one or more of the following conditions:

a) If the repeated starting of the appliance, beyond one complete predetermined cycle of operation, to the point where some form of limit switch opens the circuit, is independent of any manual control.

b) If, during any single predetermined cycle of operation, the motor is caused to stop and restart one or more times.

c) If, upon energizing the appliance, the initial starting of the motor may be intentionally delayed beyond normal, conventional starting.

d) If, during any single predetermined cycle of operation, automatic changing of the mechanical load may reduce the motor speed to the point of reestablishing the starting-winding connections to the supply circuit.

16.2.3 An automatically controlled blender is considered to comply with 16.2.1 if it is provided with locked-rotor protection in accordance with 16.2.5.

16.2.4 The motor of an ice cream freezer (bucket type), butter churn or pasta mixer-extruder shall comply with the locked rotor protection in 16.2.5.

Exception: An ice cream freezer, butter churn or pasta mixer-extruder motor is considered to comply with the requirement in 16.2.4, if when the ice cream freezer, butter churn or pasta mixer-extruder container and the driven member are frozen together, the motor is energized and the temperature limits specified in 16.2.5 are not exceeded.

16.2.5 Motor-overload protection required for an appliance shall consist of one of the following:

a) Thermal protection complying with the applicable requirements in the Standard for Overheating Protection for Motors, UL 2111.

Exception No. 1: For an appliance that includes a control that positively and reliably limits the length of the time the appliance can operate, the duration of the temperature test and the endurance test, both under locked-rotor conditions, may be less than that specified but shall not be less than the time the appliance can operate.

Exception No. 2: A motor intended to move air only by means of an air-moving fan that is integrally attached, keyed, or otherwise fixed to the motor shaft is not required to have running-overload protection.

Documents
Document Sharing Hub
Full document details: UL 982 2006

Exception No. 3: A shaded-pole motor with a 2:1 or smaller ratio between locked-rotor and no-load currents and a 1 A or smaller difference between no-load and locked-rotor currents is considered to have acceptable overload protection if it is protected against locked-rotor conditions only.

b) Impedance protection complying with the Standard for Overheating Protection for Motors, UL 2111, when the motor is tested as used in the appliance under locked-rotor conditions.

c) Other protection that is shown by test to be equivalent to the protection as specified in (a).

16.2.6 The functioning of a motor-protective device provided as part of an appliance (whether such device is required or not) shall not result in a risk of fire or injury to persons. Compliance shall be determined by the following:

a) Limited Short Circuit Test in accordance with the Standard for Overheating Protection for Motors, UL 2111, and one of the following or combination thereof:

1) 16.2.1 (for automatically-controlled appliances);

2) Continuous Operation Test (for appliances actuated by a momentary contact switch), Section 46;

3) Abnormal Operation Test (for appliances with metal or partly-metallic enclosures), Section 47; or

4) Enclosures of Polymeric Material for Portable Appliances (for appliances with polymeric enclosures), Section 58.

b) For appliances provided with an automatic reset or user-resettable overload-protective device where automatic restarting would result in a risk of injury to persons, each of three representative appliances shall be energized and have their rotors stalled until the overload-protective device opens. While still energized, and the rotor no longer stalled, the representative appliances shall then be allowed to cool down until the overload-protective device closes. The representative appliance shall not automatically restart or have the possibility of accidentally being restarted. A distinct and deliberate motion shall be required to restart the representative appliance.

16.2.6 effective December 1, 2004

Documents
Document Sharing Hub

Full document details: UL 982 2006

17 Switches

17.1 A switch shall be appropriate for the particular application, and shall have a current and voltage rating not less than that of the load which it controls when the appliance is operated normally.

17.2 In applying the requirement in 17.1 to a switch controlling a motor, it is required that the switch be appropriate for use with a motor load or have a suitable rating not less than that of the controlled motor. See 52.1 and 53.1.

17.3 If, when energized, an appliance has moving parts that are likely to cause injury to persons, a motor control switch, other than a momentary-contact switch, on the appliance shall have a plainly identified OFF position, or ON and OFF positions and be marked in accordance with 17.4 or 17.5 as applicable.

17.4 With reference to the requirement in 17.3, the OFF position of the switch shall be marked with either one or both of the following:

a) The word ″OFF″, or its equivalent (for example, ″STOP″); or

b) The symbol shown in Figure 17.2.

17.5 With reference to the requirement in 17.3, the ON position of the switch, when identified, shall be marked with one or both of the following, as determined by the marking of the OFF position of the switch:

a) The word ″ON″, or its equivalent (for example, ″START″) when the OFF position of the switch is marked with the word ″OFF″, or its equivalent (for example, ″STOP″); or

b) The symbol shown in Figure 17.1, when the OFF position of the switch is marked with the symbol shown in Figure 17.2.

See also 68.6.

Documents
Document Sharing Hub
Full document details: UL 982 2006

Figure 17.1
Symbol for ON position

IEC 417, Symbol 5007

Figure 17.2
Symbol for OFF position

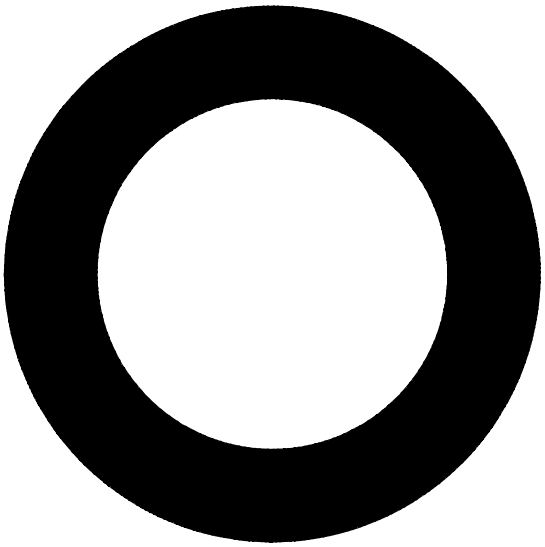

IEC 417, Symbol 5008

Documents
Document Sharing Hub
Full document details: UL 982 2006

17.6 If a portable appliance employs a motor rated at more than 1/3 horsepower, a motor-control switch for the motor shall be provided in the appliance. See 19.8.

17.7 An appliance shall not employ a through-cord switch.

17.8 A manually operated, line-connected, single pole switch, a triac controlling a motor, or other control device, intended for appliance ON-OFF operation shall be connected to the ungrounded conductor of the power-supply cord. Table 11.3 specifies the polarity identification of the power-supply cord conductors.

17.8 effective December 1, 2004

18 Capacitors

18.1 A capacitor of a capacitor motor and a capacitor connected across the line (such as a capacitor for radio-interference elimination) shall be housed within an enclosure or container that protects the plates against physical damage and prevents the emission of flame or molten material resulting from failure of the capacitor. Except as noted in 18.2 and 18.4, the container shall be sheet steel having an average thickness of 0.020 inch (0.51 mm) or shall be so constructed as to afford equivalent protection.

18.2 The container of a capacitor may be of sheet metal less in thickness than that mentioned in 18.1 or of other appropriate material if the capacitor is mounted in an enclosure that houses other parts of the appliance and if such a box, case, and the like is acceptable for the enclosure of live parts.

18.3 Under both normal and abnormal conditions of use, a capacitor employing a dielectric medium more combustible than askarel shall not cause or increase a risk of electric shock or fire and shall be protected against expulsion of the dielectric medium.

18.4 The individual enclosure of an electrolytic capacitor with means for venting is required to be such as to provide protection against physical injury only and the requirement for minimum enclosure thickness does not apply. The individual enclosure of an electrolytic capacitor not provided with means for venting and with an opening more than 1/16 inch (1.6 mm) wide between the capacitor enclosure and the motor need not comply with the requirement for enclosure thickness given in 18.1, if it is found acceptable in accordance with the following. Several samples of the capacitor mounted in the usual manner and with cotton placed around openings in the enclosure, are to be subjected to such over voltage as to cause failure. If the cotton ignites upon failure of the capacitor, the results are not acceptable.

18.5 The voltage rating of a capacitor, other than a motor capacitor, shall be no less than the maximum steady-state potential to which the capacitor is subjected during operation of the appliance.

Documents
Document Sharing Hub

Full document details: UL 982 2006

19 Spacings

19.1 A circuit derived from a source of supply classified in 5.15 as a line-voltage circuit by connecting a resistance in series with the supply circuit as a means for limiting the voltage and current, is not considered to be a low-voltage circuit as described in 5.16.

19.2 All uninsulated live parts connected to different (line-voltage, low-voltage) circuits shall be spaced from one another as though they were parts of opposite polarity, in accordance with the requirements in 19.4 and 19.5 and shall be judged on the basis of the highest voltage involved.

19.3 The spacing between uninsulated live parts of opposite polarity and between such parts and dead metal which may be grounded in service is not specified for parts of circuits that are classified as low-voltage in 5.16.

19.4 The spacing between wiring terminals (see 12.2.1) of opposite polarity, and the spacing between a wiring terminal and any other uninsulated metal part (dead or alive) not of the same polarity, shall not be less than 1/4 inch (6.4 mm) between terminals and other uninsulated metal parts not always of the same polarity (applies to the sum of the spacings involved where an isolated dead part is interposed).

19.5 Except as noted in 19.7 and 19.9, the spacing between uninsulated live parts of opposite polarity, uninsulated live parts and a dead metal part that is exposed to contact by persons or that may be grounded, and uninsulated live parts and uninsulated (or not acceptably insulated) parts in the secondary circuit, shall not be less than the value indicated in Table 19.1. If an uninsulated live part is not rigidly fixed in position (by means other than friction between surfaces), or if a movable dead metal part is in proximity to an uninsulated live part, the construction shall be such that the required minimum spacing will be maintained.

Table 19.1
Minimum spacings at other than supply wiring terminals

Table 19.1 effective December 1, 2004

Potential involved, volts	Rating of motor employed [Motor diameter 7 inches (178 mm) or less[a]]	Minimum Spacings	
		Over surface inch (mm)	Through air, inch (mm)
0 – 130	1/3 horsepower (250 W output) or less	1/16 (1.6)	1/16 (1.6)
	More than 1/3 horsepower	3/32 (2.4)	3/32 (2.4)
131 – 250	All motors	3/32 (2.4)	3/32 (2.4)

NOTE – Film-coated wire is considered to be an uninsulated live part.

[a] This is the diameter, measured in the plane of laminations of the circle circumscribing the stator frame, excluding lugs, fins, boxes, and similar parts used solely for motor mounting, cooling, assembly, or connection.

19.6 In applying Table 19.1 to an appliance incorporating two or more motors of different sizes, the spacings inside each motor are judged on the basis of the size of that motor and the spacings elsewhere in the appliance are judged on the basis of the size of the largest motor in the appliance.

Documents
Document Sharing Hub
Full document details: UL 982 2006

19.7 The spacing requirements given in 19.4 do not apply to the inherent spacings of a component of the appliance, such as a snap switch; such spacings are judged on the basis of the requirements for the component.

19.8 In the application of 16.2.1 and Table 19.1 to a motor not rated in horsepower, use is to be made of the appropriate table of the National Electrical Code, ANSI/NFPA 70 which gives the relationship between horsepower and full-load currents for motors. For a universal motor, the table applying to a single-phase, alternating current motor is to be used if the appliance is marked for use on alternating current only; otherwise, the table applying to direct-current motors is to be used.

19.9 If an isolated dead metal part is interposed between or is in close proximity to live parts of opposite polarity, to a live part and an exposed dead metal part, or to a live part and a dead metal part that may be grounded, the spacing may not be less than 3/64 inch (1.2 mm) between the isolated dead metal part and any one of the other parts previously mentioned, provided the total spacing between the isolated dead metal part and the two other parts is not less than the value indicated in Table 19.1.

19.10 Except as indicated in 19.11, an insulating lining or barrier of vulcanized fiber or similar materials employed where spacings would otherwise be unacceptable shall not be less than 1/32 inch (0.8 mm) thick and shall be so located or of such material that it will not be adversely affected by arcing; except that vulcanized fiber not less than 1/64 inch (0.4 mm) thick may be used in conjunction with an air spacing of not less than 50 percent of the spacing required for air alone.

19.11 Insulating material having a thickness less than that indicated in 19.10 may be used if, upon investigation, it is found to be appropriate for the particular application.

19.12 A printed wiring board with spacings between opposite polarity circuits (other than a low-voltage circuit, see 19.3) less than those required is acceptable provided that the spacings:

a) Are located on a portion of the printed wiring board provided with a conformal coating that complies with the requirements in the Standard for Polymeric Materials – Use in Electrical Equipment Evaluations, UL 746C, and the dielectric voltage-withstand test described in 37.6; or

b) Are located on the load side of a resistor such that a short circuit from the load side of the resistor to the other side of the line does not result in the resistor power dissipation exceeding the resistor wattage rating; or

c) Comply with the spacing requirements in the Standard for Solid-State Controls for Appliances, UL 244A; or

d) Comply with the applicable requirements in the Standard for Insulation Coordination Including Clearances and Creepage Distances for Electrical Equipment, UL 840.

Documents
Document Sharing Hub

Full document details: UL 982 2006

20 Grounding

20.1 Required grounding

20.1.1 The following types of appliances shall have provision for grounding:

a) An appliance for use in damp or wet locations (see 5.9, 5.10, and 5.22);

b) An appliance intended for outdoor use;

c) An appliance intended to be used on a circuit operating at more than 150 V to ground; and

d) An appliance intended for permanent connection to the supply source.

Exception: An appliance intended to operate at a nominal potential of 240 V and any other potential greater than 150 V is to be provided with means for grounding in accordance with 20.2.2, unless the marked rating on the appliance is 120/240 V and the appliance is wired for a nominal 120 V connection, or the appliance is otherwise marked to indicate that it is to be connected to a circuit operating at 150 V or less to ground.

20.1.1 effective December 1, 2004

20.2 Continuity

20.2.1 If a grounding means is provided on an appliance, whether required or not, all exposed dead metal parts and all dead metal parts within the enclosure which are exposed to contact during any servicing operation and which are likely to become energized shall be connected to the grounding means. Servicing here mentioned means user servicing, not repairs made by a qualified service man.

20.2.2 The following are considered to constitute means for grounding:

a) In an appliance intended to be permanently connected by a metal-enclosed wiring system – a knockout or equivalent opening in the metal enclosure of the appliance.

b) In an appliance intended to be permanently connected by a nonmetal-enclosed wiring system (for example, nonmetallic-sheathed cable) – an equipment-grounding terminal or lead.

c) In a cord-connected appliance – an equipment-grounding conductor in the cord.

20.2.3 An appliance marked as being provided with double insulation shall not be provided with a means for grounding.

Documents
Document Sharing Hub
Full document details: UL 982 2006

20.3 Grounding identification

20.3.1 The grounding conductor of a flexible cord shall be green with or without one or more yellow stripes. The grounding conductor shall be secured to the frame or enclosure of the appliance by means of a screw that is not likely to be removed during any servicing operation not involving the power-supply cord, or by other equivalent means. Solder alone shall not be used for securing the grounding conductor. The grounding conductor shall be connected to the fixed member of a grounding-type attachment plug except that the grounding member of the plug on a portable hand-guided or hand-supported appliance may be of the movable, self-restoring type. Servicing as mentioned in this paragraph includes repair of the appliance by a qualified service person.

20.3.2 If means for grounding is provided on the appliance even though not required, it shall comply with the pertinent requirements in this section of the Standard.

21 Flooding of Live Parts

21.1 A counter-top appliance shall preclude the following actions when such action would result in risk of fire or electric shock. Compliance shall be determined by the Flooding of Live Parts Tests, Section 40, the Test for Deterioration of Parts Subject to Flexing, Section 41, the Test for Reliability of Parts Not Subject to Flexing, Section 42, and the Insulation Resistance Test, Section 43:

a) Overflow of liquids into the electrical or motor enclosure of the appliance (40.1);

b) Drawing of liquids into the electrical or motor enclosure of the appliance (40.2); and

c) Malfunction of a timer switch or of a float- or pressure-operated switch, deterioration or damage of a boot or diaphragm, or the deterioration and reliability of seals and gaskets, resulting in the entrance of liquid into the electrical or motor enclosure of the appliance (Sections 41, 42, and 43).

21.1 effective December 1, 2004

21.2 If the failure of a liquid container provided as part of an appliance would result in a risk of fire or electric shock, the container shall be of a material which is compatible with the liquid intended to be used therein.

Documents
Document Sharing Hub

Full document details: UL 982 2006