UL 982

Underwriters Laboratories Inc.

Standard for Safety

Motor-Operated Household Food Preparing Machines

AVA Documents
Document Sharing Hub

Full document details: UL 982 2009

UL COPYRIGHTED MATERIAL –
NOT AUTHORIZED FOR FURTHER REPRODUCTION OR
DISTRIBUTION WITHOUT PERMISSION FROM UL

Documents
Document Sharing Hub

Full document details: UL 982 2009

UL Standard for Safety for Motor-Operated Household Food Preparing Machines, UL 982

Sixth Edition, Dated June 19, 2009

Summary of Topics

This revision of ANSI/UL 982 is being issued to address universal upkeep of UL Standards for Safety. These revisions are considered to be non-substantive and not subject to UL's STP process.

Text that has been changed in any manner or impacted by UL's electronic publishing system is marked with a vertical line in the margin. Changes in requirements are marked with a vertical line in the margin and are followed by an effective date note indicating the date of publication or the date on which the changed requirement becomes effective.

All rights reserved. No part of this publication may be reproduced, stored in a retrieval system, or transmitted in any form by any means, electronic, mechanical photocopying, recording, or otherwise without prior permission of UL.

UL provides this Standard ″as is″ without warranty of any kind, either expressed or implied, including but not limited to, the implied warranties of merchantability or fitness for any purpose.

In no event will UL be liable for any special, incidental, consequential, indirect or similar damages, including loss of profits, lost savings, loss of data, or any other damages arising out of the use of or the inability to use this Standard, even if UL or an authorized UL representative has been advised of the possibility of such damage. In no event shall UL's liability for any damage ever exceed the price paid for this Standard, regardless of the form of the claim.

Users of the electronic versions of UL's Standards for Safety agree to defend, indemnify, and hold UL harmless from and against any loss, expense, liability, damage, claim, or judgment (including reasonable attorney's fees) resulting from any error or deviation introduced while purchaser is storing an electronic Standard on the purchaser's computer system.

The requirements in this Standard are now in effect, except for those paragraphs, sections, tables, figures, and/or other elements of the Standard having future effective dates as indicated in the note following the affected item. The prior text for requirements that have been revised and that have a future effective date are located after the Standard, and are preceded by a ″SUPERSEDED REQUIREMENTS″ notice.

The following table lists the future effective dates with the corresponding item.

UL COPYRIGHTED MATERIAL –
NOT AUTHORIZED FOR FURTHER REPRODUCTION OR
DISTRIBUTION WITHOUT PERMISSION FROM UL

Documents
Document Sharing Hub

Full document details: UL 982 2009

Future Effective Date	References
June 19, 2010	30.4.7, 30.4.8, and 30.4.13
June 19, 2011	17.1, 17.4 – 17.6, 22.4, 30.1.2, 30.2.1, 30.3.1, 36.20.2, 41.1 – 41.4, 42.1, 42.4, 42.5, 53.1, and 70.17.1. Additionally 24.4 and 42.5 from the 5th edition are deleted as of June 19, 2011.

UL COPYRIGHTED MATERIAL –
NOT AUTHORIZED FOR FURTHER REPRODUCTION OR
DISTRIBUTION WITHOUT PERMISSION FROM UL

Documents
Document Sharing Hub

Full document details: UL 982 2009

June 19, 2009
(Title Page Reprinted: October 9, 2009)

ANSI/UL 982-2009

UL 982

Standard for Motor-Operated Household Food Preparing Machines

Prior to the first edition, the requirements for the products covered by this standard were included in the Standard for Motor-Operated Appliances, UL 73.

First Edition – January, 1975
Second Edition – May, 1979
Third Edition – February, 1989
Fourth Edition – February, 1995
Fifth Edition – October, 2004

Sixth Edition

June 19, 2009

This ANSI/UL Standard for Safety consists of the Sixth Edition including revisions through October 9, 2009.

The most recent designation of ANSI/UL 982 as an American National Standard (ANSI) occurred on June 19, 2009. ANSI approval for a standard does not include the Cover Page, Transmittal Pages, Title Page, or effective date information.

Comments or proposals for revisions on any part of the Standard may be submitted to UL at any time. Proposals should be submitted via a Proposal Request in UL's On-Line Collaborative Standards Development System (CSDS) at http://csds.ul.com.

UL's Standards for Safety are copyrighted by UL. Neither a printed nor electronic copy of a Standard should be altered in any way. All of UL's Standards and all copyrights, ownerships, and rights regarding those Standards shall remain the sole and exclusive property of UL.

COPYRIGHT © 2009 UNDERWRITERS LABORATORIES INC.

UL COPYRIGHTED MATERIAL –
NOT AUTHORIZED FOR FURTHER REPRODUCTION OR
DISTRIBUTION WITHOUT PERMISSION FROM UL

Documents
Document Sharing Hub

Full document details: UL 982 2009

No Text on This Page

UL COPYRIGHTED MATERIAL –
NOT AUTHORIZED FOR FURTHER REPRODUCTION OR
DISTRIBUTION WITHOUT PERMISSION FROM UL

Documents
Document Sharing Hub

Full document details: UL 982 2009

CONTENTS

INTRODUCTION

1 Scope 8
2 Components 8
3 Units of Measurement 9
4 Undated References 9
5 Glossary 9

CONSTRUCTION

6 General 11
7 Frame and Enclosure 11
8 Overcurrent-Protective Devices 19
9 Mechanical Assembly 19
10 Protection Against Corrosion 20
11 Power Supply Connections – Cord-Connected Appliances 20
11.1 Cords and plugs 20
11.2 Pin terminals 25
11.3 Strain relief 25
11.4 Cord bushings 26
12 Power Supply Connections – Permanently-Connected Appliances 26
12.1 General 26
12.2 Wiring terminals 27
12.3 Grounded terminals and leads 28
13 Internal Wiring 30
14 Live Parts 31
15 Electrical Insulation 32
16 Motors 32
16.1 General 32
16.2 Overload protection 33
17 Switches 34
18 Capacitors 37
19 Spacings 38
20 Grounding 40
20.1 Required grounding 40
20.2 Continuity 40
20.3 Grounding identification 41
21 Flooding of Live Parts 41

PROTECTION AGAINST PERSONAL INJURY

22 General 41
23 Attachments 42
24 Moving Members 43
25 Stability 43
26 Stability – Floor Supported Carts and Stands 44
27 Enclosure and Guards 45
28 Switches, Controls, and Interlocks 46
29 Surface Temperatures 47
30 Appliances 48

UL COPYRIGHTED MATERIAL –
NOT AUTHORIZED FOR FURTHER REPRODUCTION OR
DISTRIBUTION WITHOUT PERMISSION FROM UL
Documents
Document Sharing Hub
Full document details: UL 982 2009

30.1 All knives 48
30.2 Cord-connected knives 48
30.3 Battery-operated knives 49
30.4 Blenders 49
30.5 Food processors 52
30.6 Food choppers 53
30.7 Meat grinders and pasta extruding attachments 53
30.8 Coffee grinders 53
30.9 Vegetable shredders/slicers and centrifugal juicers 54
30.10 Ice-cube crushers 55
30.11 Wand-type mixers 56
30.12 Coffee mills 56
30.13 Pasta mixer-extruders 57

PERFORMANCE

31 General 57
32 Leakage Current Test 58
33 Operational Tests 60
34 Starting Current Test 60
34.1 Protection by fuses 60
34.2 Other overcurrent protection 60
35 Input Test 61
36 Normal Temperature Test 62
36.1 General 62
36.2 Food mixers 65
36.3 Blending mixers 66
36.4 Liquid mixers 67
36.5 Juice extractors 67
36.6 Meat grinders 68
36.7 Baby-food grinders 68
36.8 Baby-food choppers 68
36.9 Meat slicers 68
36.10 Churns 69
36.11 Knife sharpeners 69
36.12 Can openers 69
36.13 Ice crushers 69
36.14 Vegetable shredders 69
36.15 Ice cream mixer freezers (bucket type) 70
36.16 Coffee mills/grinders 70
36.17 Knives 70
36.18 Food choppers 71
36.19 Food processors 71
36.20 Battery-operated appliances 72
36.21 Under-cabinet or wall-mounted appliances 73
36.22 Wand-type mixers 73
36.23 Wand-type mixers with a milk shake attachment 73
36.24 Pasta mixer-extruders 74
36.25 Pasta extruding attachments 74
36.26 Handheld pizza cutters 74
37 Dielectric Voltage-Withstand Test 75
38 Leakage Current Following Humidity Tests 76
39 Leakage Current and Dielectric Voltage-Withstand Test (Repeated) 77

UL COPYRIGHTED MATERIAL –
NOT AUTHORIZED FOR FURTHER REPRODUCTION OR
DISTRIBUTION WITHOUT PERMISSION FROM UL
Documents
Document Sharing Hub
Full document details: UL 982 2009

40 Flooding of Live Parts Tests 77
40.1 Overflow test 77
40.2 Ingress test 78
41 Test for Deterioration of Parts Subject to Flexing 78
42 Test for Reliability of Parts Not Subject to Flexing 79
43 Insulation Resistance Test 80
44 Blender Cover Opening Splash Test 80
45 Resistance to Moisture Test 81
46 Continuous Operation Test 84
47 Abnormal Operation Test 85
48 Power Supplies and Battery Chargers Test 86
49 Electronic Control Circuits Test 87
50 Cut Strainer/Enclosure Stress Withstand Test 88
51 Operational Test Following Environmental Conditionings 89
52 Switch Overload Test 90
53 Switch Endurance Test 91
54 Strain Relief Test 91
55 Push Back Relief Test 92
56 Appliance Coupler Retention 92
57 Metal Enclosure Impact Tests 92
58 Enclosures of Polymeric Material for Portable Appliances 92
58.1 Scope 92
58.2 General 93
58.3 Flammability of enclosure 96
58.4 Resistance to hot-wire ignition 97
58.5 Impact 97
58.6 Stress-relief distortion 100
58.7 Input (repeated) 101
58.8 Strain relief (repeated) 101
58.9 Accessibility 101
58.10 Spacings to enclosure 104
58.11 Abnormal operation 104
58.12 Severe-use conditions 105
58.13 Thermal aging 106
58.14 Load test 106
59 Enclosures of Polymeric Material for Stationary or Fixed Appliances 107
60 Thermoplastic Coil Forms and Thermoplastic Insulating Material 107
60.1 General 107
60.2 Normal conditioning 107
60.3 Abnormal conditioning 108
60.4 Running-burnout conditioning 108

MANUFACTURING AND PRODUCTION TESTS

61 Dielectric Voltage-Withstand Test 109
62 Grounding Continuity Test 112
63 Polarization Test 112
64 Electrical Indicating Device 112

UL COPYRIGHTED MATERIAL –
NOT AUTHORIZED FOR FURTHER REPRODUCTION OR
DISTRIBUTION WITHOUT PERMISSION FROM UL
Documents
Document Sharing Hub
Full document details: UL 982 2009

MARKINGS

65 General 112
66 Cautionary 114
66.1 General 114
66.2 Food mixer markings 115
66.3 Blending mixer markings 115
66.4 Liquid mixer markings 116
66.5 Cord-connected knife markings 116
66.6 Battery-operated knife markings 116
66.7 Can openers and knife sharpener markings 116
66.8 Combination cleaver-meat tenderizer markings 117
66.9 Vegetable shredder (cone type) markings 117
66.10 Vegetable shredder (disc type) markings 117
66.11 Food grinder, ice cream freezer, and juicer (reamer type) markings 118
66.12 Food processor and food chopper markings 118
66.13 Baby-food chopper/grinder markings 118
66.14 Juicer or juice extractor (centrifugal type) markings 118
66.15 Slicer markings 119
66.16 Ice crushing appliance and ice-crushing attachment markings 119
66.17 Appliance with a lamp markings 119
66.18 Appliance (outdoor-use type) markings 120
66.19 Coffee mill and butter churn markings 120
66.20 Combination appliance markings 120
66.21 Multi-speed appliance markings 120
66.22 Appliance cart or stand markings 120
66.23 Wand-type mixer markings 121
66.24 Product with separable battery/battery pack markings 121
66.25 Appliance with electronic controls with a stop position markings 121
67 Carton Marking 121

INSTRUCTION MANUAL

68 General 122
69 All Appliances 123
70 Specific Appliances 124
70.1 Food mixers 124
70.2 Blending mixers 124
70.3 Liquid mixers 125
70.4 Cord-connected knives 125
70.5 Battery-operated knives 125
70.6 Can openers 126
70.7 Knife sharpeners 126
70.8 Combination cleaver-meat tenderizers 126
70.9 Vegetable shredders (cone type) 126
70.10 Vegetable shredder/slicers (disc type) 126
70.11 Meat grinders 127
70.12 Baby-food chopper 127
70.13 Baby-food grinders 127
70.14 Ice cream freezers 128
70.15 Ice crushers 128
70.16 Juicers (reamer type) 128
70.17 Juicers or juice extractors (centrifugal type) 128

UL COPYRIGHTED MATERIAL –
NOT AUTHORIZED FOR FURTHER REPRODUCTION OR
DISTRIBUTION WITHOUT PERMISSION FROM UL
Documents
Document Sharing Hub
Full document details: UL 982 2009

70.18 Slicers 129
70.19 Food processors 129
70.20 Food choppers 129
70.21 Coffee mills 130
70.22 Outdoor-use appliances 130
70.23 Appliances intended for use with a cart or stand 130
70.24 Appliance carts or stands 130
70.25 Multi-speed appliances 131
70.26 Battery operated appliances (with separate chargers) 131
70.27 Battery operated appliances 131
70.28 Under-cabinet and wall-mounted products, and appliances provided with a hanging means 131
70.29 Pasta mixers-extruders 132
70.30 Pasta extruding attachments 132
70.31 Wand-type mixers 132
70.32 Appliances with electronic controls with a stop position 133
71 User Maintenance 133
72 Mounting Instructions 133
73 Appliance-Outdoor Use 134
74 Polarization 135

APPENDIX A

Standards for Components A1

UL COPYRIGHTED MATERIAL –
NOT AUTHORIZED FOR FURTHER REPRODUCTION OR
DISTRIBUTION WITHOUT PERMISSION FROM UL
Documents
Document Sharing Hub
Full document details: UL 982 2009

INTRODUCTION

1 Scope

1.1 These requirements cover household motor-operated food preparing machines and kitchen accessories such as knife sharpeners and can openers, that are intended to be operated for short-periods of time resulting in cumulative use-time per year of less than 100 hours and that are for use in accordance with the National Electrical Code, ANSI/NFPA 70.

1.2 In the following text, a requirement that applies to one type of equipment coming within its scope, such as a blender, or mixer will be so identified by a specific reference in that requirement to the type of equipment involved. In the absence of such specific reference or if the term appliance is employed, it is to be understood that the requirement applies to all of the types of equipment covered by the standard.

1.3 These requirements cover cord-connected and permanently wired motor-operated appliances rated at a nominal 120 V including appliances supplied by low-voltage power supplies, and battery-operated appliances provided with battery chargers.

1.4 These requirements cover appliances for household use. The requirements in the Standard for Motor-Operated Commercial Food Preparing Machines, UL 763 are employed for the evaluation of appliances also intended for commercial application.

1.5 This standard does not cover sanitation, contamination, or noise aspects of these products. Reference to these items can be found in the Standard for Food, Drug and Beverage Equipment, ANSI/ASME F2.1.

1.6 An appliance employing a heating element is judged on the basis of its compliance with the requirements of this Standard, insofar as they apply and further appropriate requirements applicable to household cooking appliances.

2 Components

2.1 Except as indicated in 2.2, a component of a product covered by this standard shall comply with the requirements for that component. See Appendix A for a list of standards covering components generally used in the products covered by this standard.

2.2 A component is not required to comply with a specific requirement that:

a) Involves a feature or characteristic not required in the application of the component in the product covered by this standard, or

b) Is superseded by a requirement in this standard.

2.3 A component shall be used in accordance with its rating established for the intended conditions of use.

UL COPYRIGHTED MATERIAL –
NOT AUTHORIZED FOR FURTHER REPRODUCTION OR
DISTRIBUTION WITHOUT PERMISSION FROM UL
Documents
Document Sharing Hub
Full document details: UL 982 2009

2.4 Specific components are incomplete in construction features or restricted in performance capabilities. Such components are intended for use only under limited conditions, such as certain temperatures not exceeding specified limits, and shall be used only under those specific conditions.

3 Units of Measurement

3.1 Values stated without parentheses are the requirement. Values in parentheses are explanatory or approximate information.

4 Undated References

4.1 Any undated reference to a code or standard appearing in the requirements of this standard shall be interpreted as referring to the latest edition of that code or standard.

5 Glossary

5.1 For the purpose of this standard, the following definitions apply.

5.2 ATTENDED INTERMITTENT-DUTY HOUSEHOLD APPLIANCE – An appliance intended for infrequent and short-time use in residences and used only while attended. Food mixers and can openers are examples of this type of equipment.

5.3 CART – A stand – see 5.23 – provided with casters, wheels, rollers, or the like to make it mobile.

5.4 CASTER – A roller or swiveled wheel attached to a cart or stand that makes the cart or stand mobile.

5.5 CLOSED-TOP BLENDER CONTAINER – Food blending container with one opening that is used for securing the blade assembly.

5.6 COFFEE GRINDER – A motor operated appliance that crushes coffee beans into a powder by passing them through a system of closely fitting wheels or cones having serrated surfaces. This appliance will have an intake hopper and a discharge container.

5.7 COFFEE MILL – A motor operated appliance that chops coffee beans into a powder by means of a system of blades rotating at high speed.

5.8 COUNTER-SUPPORTED APPLIANCE – An appliance that is physically supported by a counter, table or bench during the performance of its intended electrically-operated functions, such as for a blender – blending, is to be considered a counter supported appliance. Reference is to be made to the specific product's Use and Care Literature in establishing the intended electrically-operated functions of the appliance.

5.9 DAMP LOCATION – Partially protected place or area where the appliance is either used or stored under canopies, marquees, roofed open porches, and like locations, and interior locations subject to moderate degrees of moisture, such as some basements, barns, and cold-storage warehouses.

5.10 DRY LOCATION – A place or area where the appliance is either used or stored not normally subject to dampness or wetness. A location temporarily subject to dampness or wetness, as in the case of a building under construction, is included in this category.

5.11 ENCLOSURE – That part of the appliance that:

UL COPYRIGHTED MATERIAL –
NOT AUTHORIZED FOR FURTHER REPRODUCTION OR
DISTRIBUTION WITHOUT PERMISSION FROM UL
Documents
Document Sharing Hub
Full document details: UL 982 2009

a) Renders inaccessible all or any parts of the equipment that may otherwise present a risk of electric shock; and/or

b) Reduces the likelihood of propagation of flame initiated by electrical disturbances occurring within.

5.12 FIXED APPLIANCE – An appliance that is fastened or otherwise secured at a specific location.

5.13 HAND-SUPPORTED APPLIANCE – An appliance that is physically supported by any part of the body of the user during the performance of its intended electrically-operated functions, such as for an electric knife – carving meat, is to be considered a hand-supported appliance. Reference is to be made to the specific product's Use and Care Literature in establishing the intended electrically-operated functions of the appliance.

5.14 INDIVIDUAL SERVING SIZE OPEN-TOP BLENDER CONTAINER – Blender container, with a maximum capacity not exceeding 20 oz., where the blender blades are attached to the bottom of the container and the drinking lid is attached to the top of the container during blending. The drinking lid is provided with an integral cover which seals the drink opening during blending. When blending is completed, the container is inverted, so that the blender blades may be removed and the container bottom secured. The product is then consumed directly from the container via the sealable drink opening in the lid.

5.15 INTERLOCK – A device or arrangement by means of which the functioning of one part is controlled by the functioning of another, for safety purposes.

5.16 LINE-VOLTAGE CIRCUIT – A circuit classified as line voltage for the purpose of this Standard is one involving a maximum potential of not more than 125 V and having circuit characteristics in excess of those of a low-voltage circuit.

5.17 LOW-VOLTAGE CIRCUIT – A circuit classified as low voltage is one involving a peak open-circuit potential of not more than 42.4 V supplied by a primary battery, by a standard Class 2 transformer, or by a combination of a transformer and a fixed impedance which, as a unit, complies with all performance requirements for Class 2 transformers.

5.18 MAXIMUM CAPACITY – The maximum capacity of a container when completely filled regardless of any marked capacity or fill lines. When so indicated, the maximum capacity is determined while the unit is operating.

5.19 OPEN-TOP BLENDER CONTAINER – Food blending container with opening on the top provided with a separable cover.

5.20 PORTABLE APPLIANCE – An appliance that is actually moved or can easily be moved from one place to another in normal use. Some portable appliances, however, are not likely to be moved from one place to another in normal use.

5.21 RATED CAPACITY – The maximum capacity of a container when filled to the marked capacity or fill line.

5.22 SELF-HOLDING PROTECTOR – A device that is calibrated to open the motor circuit upon reaching a certain temperature but requires both cool down below the calibration point and removal of power for resetting of the protector. This is considered a manual reset device.

5.23 STAND – A structure intended to support an appliance.

UL COPYRIGHTED MATERIAL –
NOT AUTHORIZED FOR FURTHER REPRODUCTION OR
DISTRIBUTION WITHOUT PERMISSION FROM UL
Documents
Document Sharing Hub
Full document details: UL 982 2009

5.24 STATIONARY APPLIANCE – An appliance that is not easily moved from one place to another in normal use.

5.25 SUPPLEMENTARY OVERCURRENT PROTECTOR – A device designed to open the circuit automatically on a predetermined value of time versus current or voltage within the appliance. It is intended for use as overcurrent, or over- or under-voltage protection within the appliance where branch-circuit overcurrent protection is already provided.

5.26 WET LOCATION – A place or area where the appliance is either used or stored exposed to weather and unprotected.

CONSTRUCTION

6 General

6.1 An appliance shall employ materials that are intended for the particular use and shall be made and finished with the degree of uniformity and grade of workmanship practicable in a well-equipped factory.

7 Frame and Enclosure

7.1 The frame and enclosure of an appliance shall be strong and rigid enough to resist the abuses likely to be encountered during normal service. The construction of the appliance shall preclude total or partial collapse with the attendant reduction of required minimum acceptable spacings, loosening or displacement of parts, and other serious defects which alone or in combination constitute an increase in the risk of fire, electric shock, or injury to persons.

7.2 An appliance shall be provided with enclosures of material acceptable for the particular application that shall house all electrical parts that may present a risk of fire or injury to persons under normal use and under reasonably foreseeable misuse.

7.3 Among the factors taken into consideration when an enclosure is being judged for acceptability are its:

a) Physical strength;

b) Resistance to impact;

c) Moisture-absorptive properties;

d) Combustibility;

e) Resistance to corrosion; and

f) Resistance to distortion at temperatures to which the enclosure may be subjected during conditions of normal or abnormal use.

For a nonmetallic enclosure, all of these factors are considered with respect to thermal aging.

UL COPYRIGHTED MATERIAL –
NOT AUTHORIZED FOR FURTHER REPRODUCTION OR
DISTRIBUTION WITHOUT PERMISSION FROM UL
Documents
Document Sharing Hub
Full document details: UL 982 2009

7.4 The appliance enclosure shall house all moving parts except for those which need be exposed to perform their intended function, such as the beater blades to a mixer. See PROTECTION AGAINST PERSONAL INJURY.

7.5 Electrical parts of an appliance shall be so located or enclosed that protection against unintentional contact with uninsulated live parts will be provided.

7.6 The construction of an enclosure of a knife-sharpener (or a combination appliance having a knife-sharpening function, including an appliance provided with a mechanical sharpening block that is open to the motor or electrical compartment) shall preclude the drawing-in of filings developed during the sharpening function if such an event introduces a risk of fire or electric shock. See 39.3 – 39.5.

7.7 The construction of an appliance intended for outdoor use shall be such as to prevent water from coming into contact with uninsulated live parts when the appliance is subjected to a test to simulate conditions that might occur during actual use. See Resistance to Moisture Test, Section 45.

Exception: This requirement is not applicable if the appliance is marked in accordance with 66.18 for outdoor use type.

7.8 An opening smaller than 1 inch (25.4 mm) in an enclosure is acceptable if a probe, as illustrated in Figure 7.1 when inserted point first into an opening, cannot be made to touch any uninsulated live part or film-coated wire. The probe shall be applied in all possible articulated positions.

UL COPYRIGHTED MATERIAL –
NOT AUTHORIZED FOR FURTHER REPRODUCTION OR
DISTRIBUTION WITHOUT PERMISSION FROM UL

Documents
Document Sharing Hub

Full document details: UL 982 2009

Figure 7.1
Probe

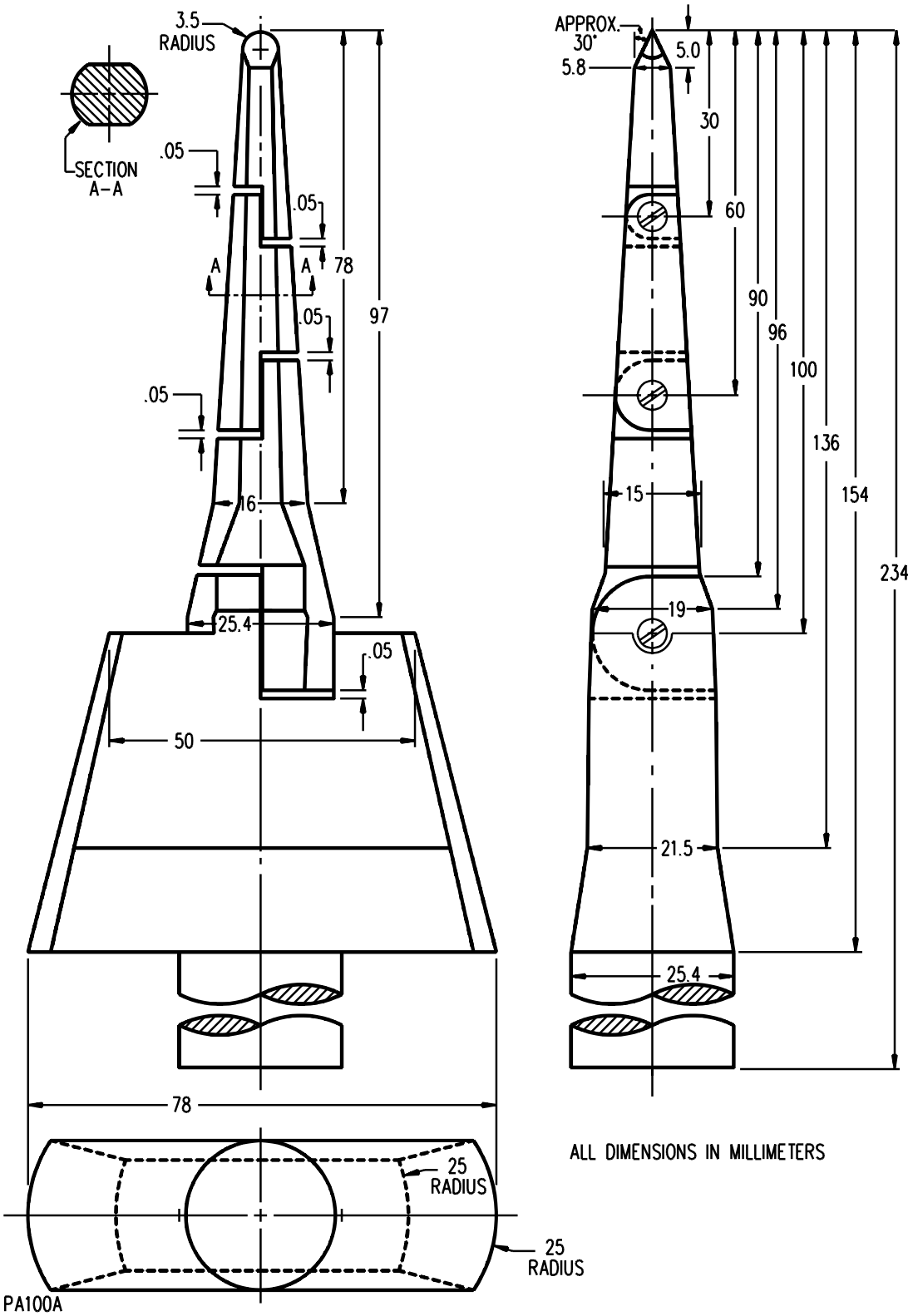

UL COPYRIGHTED MATERIAL –
NOT AUTHORIZED FOR FURTHER REPRODUCTION OR
DISTRIBUTION WITHOUT PERMISSION FROM UL

Documents
Document Sharing Hub

Full document details: UL 982 2009

7.9 An opening provided for hanging or mounting an appliance shall be so located or guarded that a nail, hook, or the like does not displace a part that creates a risk of fire or electric shock and does not contact one of the following:

a) An uninsulated live metal part;

b) Magnet wire;

c) Internal wiring;

d) Moving parts; or

e) Any other part likely to create a risk of fire or electrical shock.

7.10 An opening 1 inch (25.4 mm) or larger in an enclosure as illustrated in Figure 7.2 is acceptable if, within the enclosure, there is no uninsulated live part or magnet wire:

a) Less than X distance from the perimeter of the opening; as well as

b) Within the volume generated by projecting the perimeter X distance normal to its plane.

X equals 5 times the diameter of the largest diameter rod which can be inserted through the opening.

Figure 7.2
Opening in enclosure

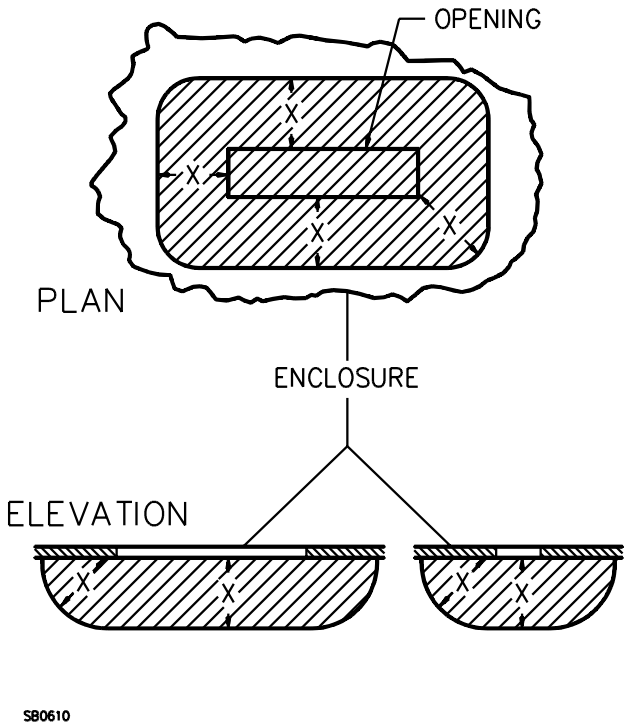

UL COPYRIGHTED MATERIAL –
NOT AUTHORIZED FOR FURTHER REPRODUCTION OR
DISTRIBUTION WITHOUT PERMISSION FROM UL
Documents
Document Sharing Hub
Full document details: UL 982 2009

7.11 During the examination of an appliance in connection with the requirements in 7.2 – 7.5 any part of the enclosure is to be disregarded – that is, it will not be assumed that the part in question affords protection against electric shock or injury to persons – if it either:

a) Must be opened or removed, with or without the use of tools, to perform manufacturer's recommended user servicing, maintenance, operating adjustments, attachment of accessories, or other instructions; or

b) Can be opened or removed without the use of tools.

Exception: A part that requires a tool for opening or removal to perform manufacturer's recommended user servicing, maintenance, operating adjustments, attachment of accessories, or other instructions is to remain in place if the appliance is marked in accordance with 65.7.

7.12 The enclosure of an automatically controlled appliance shall prevent molten metal, burning insulation, flaming particles, or the like from falling on combustible materials, including the surface upon which the appliance is supported. See 16.2.2.

7.13 The requirement in 7.12 will necessitate the use of a barrier material that resists ignition:

a) Under a motor unless:

1) The structural parts of the motor or of the appliance provide the equivalent of such a barrier;

2) The protection provided with the motor is such that no burning insulation or molten material falls to the surface that supports the appliance when the motor is energized under each of the following fault conditions:

i) Open main winding;

ii) Open starting winding;

iii) Starting switch short-circuited; and

iv) For a permanent-split-capacitor motor the capacitor is short circuited. The short circuit is to be applied before the motor is energized and the rotor is to be blocked; or

3) The motor is provided with a thermal motor protector (a protective device that is sensitive to temperature and current) that will prevent the temperature of the motor windings from becoming more than 125°C (257°F) under the maximum load under which the motor will run without causing the protector to cycle and from becoming more than 150°C (302°F) with the rotor of the motor locked; and

b) Under wiring, unless it is neoprene- or thermoplastic-insulated.

It will also necessitate that a switch, relay, solenoid, or the like be individually and completely enclosed, except for terminals, unless it can be shown that malfunction of the component would not result in a possible fire or there are no openings in the bottom of the appliance enclosure.

UL COPYRIGHTED MATERIAL –
NOT AUTHORIZED FOR FURTHER REPRODUCTION OR
DISTRIBUTION WITHOUT PERMISSION FROM UL
Documents
Document Sharing Hub
Full document details: UL 982 2009

7.14 The barrier mentioned in 7.13 shall be horizontal, shall be located as indicated in Figure 7.3, and shall not be an area less than that described in that illustration. Openings for drainage, ventilation, and the like may be employed in the barrier, provided that such openings would not permit molten metal, burning insulation or the like to fall on combustible material.

UL COPYRIGHTED MATERIAL –
NOT AUTHORIZED FOR FURTHER REPRODUCTION OR
DISTRIBUTION WITHOUT PERMISSION FROM UL

Documents
Document Sharing Hub

Full document details: UL 982 2009

Figure 7.3
Location and extent of barrier

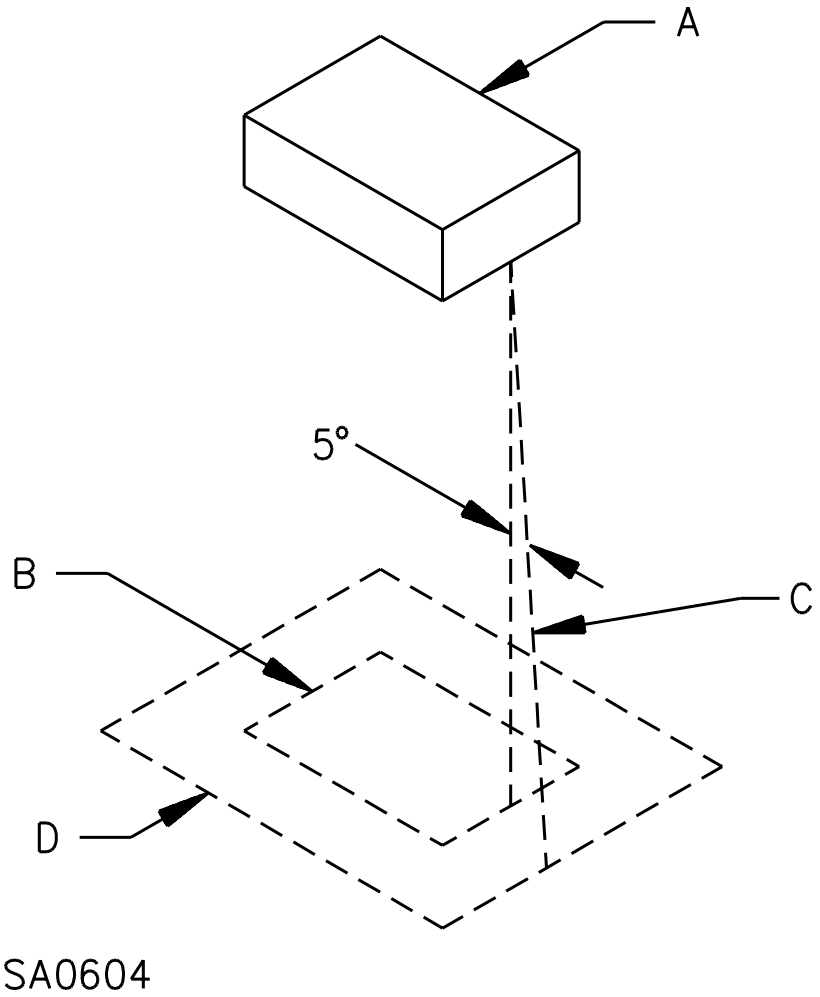

Notes:

A – Region to be shielded by barrier. This will consist of the entire component if it is not otherwise shielded, and will consist of the unshielded portion of a component that is partially shielded by the component enclosure or equivalent.

B – Projection of outline of component on horizontal plane.

C – Inclined line that traces out minimum area of barrier. When moving, the line is always:

a) Tangent to the component;

b) 5 degrees from the vertical; and

c) So oriented that the area traced out on a horizontal plane is maximum.

D – Location (horizontal) and minimum area for barrier. The area is that included inside the line of intersection traced out by the inclined line C and the horizontal plane of the barrier.

UL COPYRIGHTED MATERIAL –
NOT AUTHORIZED FOR FURTHER REPRODUCTION OR
DISTRIBUTION WITHOUT PERMISSION FROM UL
Documents
Document Sharing Hub
Full document details: UL 982 2009

7.15 The arrangement and guarding of parts of an appliance shall permit easy and proper installation and removal of strainers, baskets, and the like that must be removed, cleaned, and refilled by the user. The removal and replacement of these vessels and their ingredients shall not result in damage to or contamination of wiring, electrical components, or other parts.

7.16 The assembly described in 7.15 shall be such as to minimize the likelihood of spillage on live parts, including magnet wire.

7.17 Cast- and sheet-metal portions of the enclosure shall not be thinner than indicated in Table 7.1 unless the enclosure is found to be acceptable when judged under considerations such as those mentioned in 7.3 and 7.18.

Table 7.1
Minimum acceptable thicknesses of enclosure metal

Enclosure metal	At small, flat, unreinforced surfaces and at surfaces that are reinforced by curving, ribbing, and the like (or are otherwise of a shape and/or size) to provide adequate physical strength		At surfaces to which a wiring system is to be connected in the field		At relatively large unreinforced flat surfaces	
	Inches	(mm)	Inches	(mm)	Inches	(mm)
Die-cast metal	3/64	1.2	–	–	5/64	2.0
Cast malleable iron	1/16	1.6	–	–	3/32	2.4
Other cast metal	3/32	2.4	–	–	1/8	3.2
Uncoated sheet steel	0.026[a]	0.66[a]	0.032	0.81	0.026	0.66
Galvanized sheet steel	0.029[a]	0.74[a]	0.034	0.86	0.029	0.74
Nonferrous sheet metal	0.036[a]	0.91[a]	0.045	1.14	0.036	0.91

[a] Thinner sheet metal may be employed if found to be acceptable when the enclosure is judged under considerations such as those mentioned in 7.3 and 7.18.

7.18 In addition to being considered with reference to the factors mentioned in 7.3 an enclosure of sheet metal is to be judged with respect to its size, shape, and the thickness of metal considering the intended use of the appliance.

7.19 A cord-connected appliance that is provided with keyhole slots, notches, hanger holes, and the like for hanging on a wall shall be constructed in such a manner that the hanging means shall not be accessible without removing the appliance from the wall.

Exception: A separate wall mounted battery charger for use with an appliance shall comply with the requirements in the Standard for Battery Chargers for Charging Engine-Starter Batteries, UL 1236.

UL COPYRIGHTED MATERIAL –
NOT AUTHORIZED FOR FURTHER REPRODUCTION OR
DISTRIBUTION WITHOUT PERMISSION FROM UL
Documents
Document Sharing Hub
Full document details: UL 982 2009

7.20 Cord connected wall-mounted appliances employing a permanently fastened mounting bracket shall be removable from the bracket without the use of a tool.

8 Overcurrent-Protective Devices

8.1 A protective device shall be wholly inaccessible from outside the appliance except that the operating handle of a circuit breaker, the operating button of a manually operable motor protector, and similar parts may project outside the appliance enclosure.

8.2 If an appliance is provided with a single-pole overcurrent protective device and is required to employ a polarized plug, the overcurrent protective device shall be connected to the ungrounded conductor of the power-supply cord of an appliance. Table 11.3 specifies the polarity identification of the power-supply cord conductors.

Exception: For portable, non-automatically starting appliances employing a motor rated 1-hp or less intended to be operated on a nominal 120 volts branch circuit and employing a plug rated at 15-amperes, an overcurrent protective device within the appliance is not prohibited from being located in either conductor of the power-supply cord, when the overcurrent protective device acts only as a supplementary overcurrent protector.

9 Mechanical Assembly

9.1 An appliance shall be so assembled that it will not be affected adversely by the vibration of normal operation. Brush caps shall be tightly threaded or otherwise designed to prevent loosening.

9.2 A switch, a lampholder, and attachment-plug receptacle, a motor-attachment plug, or similar components shall be mounted securely, and, except as noted in 9.3 and 9.4, shall be prevented from turning. See 9.5.

9.3 The requirement that a switch be prevented from turning may be waived if all four of the following conditions are met:

a) The switch is to be of a plunger or other type that does not tend to rotate when operated (a toggle switch is considered to be subject to forces that tend to turn the switch during normal operation of the switch);

b) The means for mounting the switch makes it unlikely that operation of the switch will loosen it;

c) The spacings are not to be reduced below the minimum required if the switch rotates; and

d) The normal operation of the switch is to be by mechanical means rather than by direct contact by persons.

9.4 A lampholder of the type in which the lamp cannot be replaced (such as a neon pilot or indicator light in which the lamp is sealed in a nonremovable jewel) need not be prevented from turning if rotation cannot reduce spacings below the minimum required values.

UL COPYRIGHTED MATERIAL –
NOT AUTHORIZED FOR FURTHER REPRODUCTION OR
DISTRIBUTION WITHOUT PERMISSION FROM UL
Documents
Document Sharing Hub
Full document details: UL 982 2009

9.5 The means for preventing the turning mentioned in 9.2 is to consist of more than friction between surfaces – for example, a lock washer, properly applied, is acceptable as the means for preventing a small stem-mounted switch or other device having a single-hole mounting means from turning.

9.6 Small molded parts such as brush caps, shall be constructed to have the mechanical strength and rigidity to withstand the stresses of actual service. Brush caps shall be secured or located to be protected from mechanical damage which might result during normal use.

9.7 Receptacles mounted to and supported by a cover shall be secured by more than one screw or shall be a device assembly or box cover intended for securing by a single screw.

10 Protection Against Corrosion

10.1 Except as noted in 10.2, iron and steel parts shall be protected against corrosion by enameling, galvanizing, plating, or other equivalent means, if the failure of such unprotected parts would be likely to result in a condition that can cause risk of fire, electric shock or injury to persons.

10.2 In certain instances where the oxidation of iron or steel due to the exposure of the metal to air and moisture is not likely to be appreciable – thickness of metal and temperature also being factors – surfaces of sheet steel within an enclosure and the inside surface of sheet steel enclosures may not be required to be protected against corrosion. The requirement in 10.1 does not apply to bearings, cast-iron parts, laminations, and shafts or to minor parts of iron or steel as washers, screws, and the like.

11 Power Supply Connections – Cord-Connected Appliances

11.1 Cords and plugs

11.1.1 A cord-connected appliance (an appliance intended to be connected to the power-supply circuit by means of a flexible cord) shall be provided with an appropriate length of flexible cord and an attachment plug for connection to the supply circuit.

11.1.2 The flexible cord may be attached permanently to an appliance or may be in the form of a detachable power-supply cord with appropriate means for connection to the appliance. A hand-supported appliance employing a detachable power-supply cord shall include a positive means for retaining the appliance coupler body to the appliance during use. Typical retaining means may include a friction type fit coupled with a rib-type construction, snap-type fit or similar techniques. Friction type fit alone does not meet the intent of the requirement.

Exception No. 1: A hand-held appliance is not required to employ a retaining means if the supply voltage is 30 V (42 V peak) or less.

Exception No. 2: A hand-held appliance rated over 30 V (42 V peak) is not required to employ a retaining means if it complies with the requirements for Appliance Coupler Retention, Section 56.

11.1.3 Except as noted in 11.1.4, 11.1.5, and 11.1.6, the flexible cord provided on a portable, under-cabinet or wall-mounted appliance shall be Type HPN, SPT-2, SVO, SVT, SVTO, or shall be of a type at least equally as serviceable for the particular application including its resistance to oil for the particular application. Rubber insulated cords shall be an oil resistant type.

UL COPYRIGHTED MATERIAL –
NOT AUTHORIZED FOR FURTHER REPRODUCTION OR
DISTRIBUTION WITHOUT PERMISSION FROM UL
Documents
Document Sharing Hub
Full document details: UL 982 2009

11.1.4 The flexible cord on a knife sharpener and on a battery-charger unit from which a battery-operated appliance is removed for use may be Type SPT-1.

11.1.5 A hand-supported product weighing 1.50 lb (0.68 kg) or less and having a power supply cord of the coiled type and a maximum extended length of 7.0 ft (2.1 m), may employ a Type SPT-1 cord, or shall be of a type at least equally as serviceable for the particular application including its resistance to oil.

11.1.6 A flexible cord on an appliance intended for outdoor use, shall be:

a) An outdoor use type (suffix W); and

b) At least a Type SJW or SJTW.

11.1.7 The flexible power-supply cord shall not be smaller than 18 AWG (0.82 mm^2), shall be rated for use at a voltage not less than the rated voltage of the appliance, and shall have an ampacity as given in Table 400-5(A) of the National Electrical Code, ANSI/NFPA 70, not less than the current rating of the appliance. For reference purposes, an abbreviated table showing the ampacities for flexible cord with two current-carrying copper conductors is shown in Table 11.1.

Table 11.1
Ampacities for flexible cords

Conductor size		Ampacity
AWG	(mm^2)	(Amperes)
18	(0.82)	10
17	(1.04)	12
16	(1.31)	13
14	(2.08)	18
12	(3.31)	25

11.1.8 The power supply cord length shall be as outlined in Table 11.2.

Table 11.2
Power supply cord lengths

Type of appliance	Minimum acceptable length		Maximum acceptable length	
	Feet	Meters	Feet	Meters
Intended for outdoor use	6	1.82	–	–
Hand-supported[1]	5	1.52	–	–
Counter-supported	2	0.61	–	–
Floor-supported cart or stand	6	1.82	–	–
Wall-mounted	2	0.61	4.5[2]	1.4[2]

[1] See also 11.1.5.
[2] The cord may have a maximum length of 7 ft (2.1 m), if a means is provided for storing the excess length of cord.

11.1.9 The attachment plug shall be of a type with a current rating not less than the rated current of the appliance, and the voltage rating equal to the rated voltage of the appliance.

UL COPYRIGHTED MATERIAL –
NOT AUTHORIZED FOR FURTHER REPRODUCTION OR
DISTRIBUTION WITHOUT PERMISSION FROM UL
Documents
Document Sharing Hub
Full document details: UL 982 2009

11.1.10 The attachment plug of the power-supply cord of an appliance intended to be connected to a nominal 120 V circuit, and provided with a 15- or 20-ampere general-use receptacle shall be of the 3-wire grounding type. The attachment plug of the power-supply cord of an appliance provided with a manually operated, line-connected, single pole switch for appliance ON-OFF operation or an Edison-base lampholder shall be of the 2-wire polarized or 3-wire grounding type.

11.1.11 If a 3-wire grounding-type attachment plug or a 2-wire polarized attachment plug is provided on an appliance intended to be connected to a nominal 120 V circuit, the attachment plug connections shall comply with Figure 11.1 and the polarity identification of the flexible cord shall comply with Table 11.3.

UL COPYRIGHTED MATERIAL –
NOT AUTHORIZED FOR FURTHER REPRODUCTION OR
DISTRIBUTION WITHOUT PERMISSION FROM UL
Documents
Document Sharing Hub
Full document details: UL 982 2009

Figure 11.1
Connection to attachment plugs

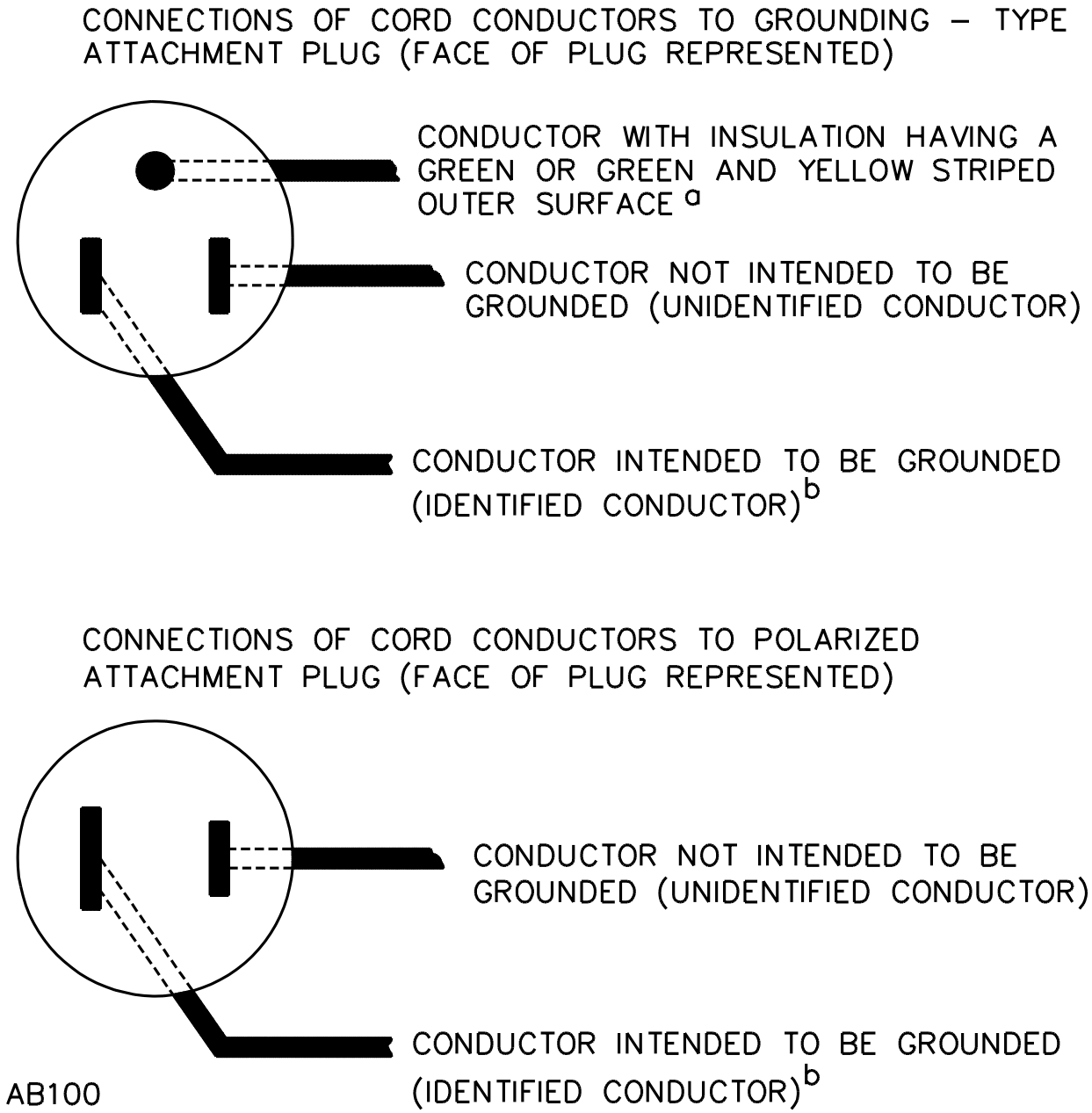

[a] The blade to which the green conductor is connected may have a U-shaped or circular cross section.

[b] Signifies a conductor identified in accordance with Table 11.3.

UL COPYRIGHTED MATERIAL –
NOT AUTHORIZED FOR FURTHER REPRODUCTION OR
DISTRIBUTION WITHOUT PERMISSION FROM UL
Documents
Document Sharing Hub
Full document details: UL 982 2009

Table 11.3
Polarity identification of flexible cords

Method of identification	Acceptable combinations		
	Conductor intended to be grounded[a, b]		All other conductors[a]
Color of braids on individual conductors	A	Solid white or gray – without tracer	Solid color other than white or gray – without tracer
	B	Color other than white or gray, with tracer in braid	Solid color other than white or gray – without tracer
Color of insulation on individual conductors	C[c]	Solid white or gray	Solid color other than white or gray
	C1[d]	Solid light blue	Solid color other than light blue, white, or gray
Color of separators	D[d]	White or gray	Color other than white or gray
Other means	E[e]	Tin or other white metallic coating on all strands of the conductor	No tin or other white metallic coating on the strands of the conductor
	F[e]	A stripe, ridge, or groove on the exterior surface of the cord	

[a] A conductor finished to show a green color with or without one or more yellow stripes or tracers is to be used only as an equipment grounding conductor.
[b] The grounded (identified) conductor is the neutral supply conductor.
[c] Only for cords – other than Types SP-1, SP-2, SPT-1, and SPT-2 – having no braid on any individual conductor.
[d] For jacketed cord.
[e] Only for Types SP-1, SP-2, SPT-1, and SPT-2 cords.

11.1.12 The attachment plug of the power-supply cord of an appliance shall have an ampacity not less than the rated current of the appliance, or the input current under maximum normal load conditions, whichever is greater, and a voltage rating not less than the rated voltage of the appliance. When an appliance is able to be adapted for use on two or more different values of voltage by field alteration of internal connections, the attachment plug provided with the appliance shall be rated for the voltage for which the appliance is connected when shipped from the factory.

11.1.13 The conductor of the power-supply cord that is intended to be grounded shall have the following items connected to it:

a) The screw shell of an Edison-base lampholder; and

b) The terminal or lead of a receptacle intended to be grounded.

Table 11.3 identifies the supply cord conductor intended to be grounded.

11.1.14 An appliance employing a polarized detachable power-supply cord shall not accommodate a non-polarized cord.

UL COPYRIGHTED MATERIAL –
NOT AUTHORIZED FOR FURTHER REPRODUCTION OR
DISTRIBUTION WITHOUT PERMISSION FROM UL
Documents
Document Sharing Hub
Full document details: UL 982 2009

11.2 Pin terminals

11.2.1 An appliance intended for use with a detachable power-supply cord shall not be provided with terminal pins that will accommodate a standard flatiron or appliance plug.

11.2.2 If an appliance is provided with pin terminals, the construction of the appliance shall be such that live parts will not be exposed to unintentional contact both during and after normal placement of the intended female fitting on the pins.

11.2.3 A pin guard is required, such that:

a) A straight edge nominally 1/16 inch (1.6 mm) thick placed in any position, across and in contact with edges of the pin terminal opening without the fitting cannot be made to contact any current-carrying pin; and

b) With the fitting aligned with the pins and the face of the fitting in a plane located perpendicular to the end or ends of the farthest projecting current-carrying pins, the probe illustrated in Figure 7.1 shall not touch any current-carrying pin while the probe is inserted through any opening which is then present.

11.3 Strain relief

11.3.1 Strain relief shall be provided to prevent a mechanical stress on a flexible cord from being transmitted to terminals, splices, or interior wiring. See 54.1.

11.3.2 A clamp may be used on Types SPT-1, SPT-2, SVT and SVTO flexible cords protected by varnished-cloth tubing, phenolic, vulcanized fiber or the equivalent under the clamp, if the strain relief assembly complies with the requirements in 54.3. Thermoplastic tubing is not acceptable over thermoplastic cords.

Exception: A non-metallic clamp may be used on Types SPT-1, SPT-2, SVT, and SVTO flexible cords without tubing, fiber or equivalent protection under the clamp if it complies with the requirements in 54.3.

11.3.3 Means shall be provided to prevent the supply cord from being pushed into the enclosure of an appliance through the cord-entry hole when such displacement results in:

a) Subjecting the supply cord to mechanical damage;

b) Exposing the supply cord to a temperature higher than that for which it is rated;

c) Reducing spacings (such as to a metal strain-relief clamp) below the minimum required values; or

d) Damaging internal connections or components.

To determine compliance, the supply cord shall be tested in accordance with Section 55, Push Back Relief Test.

UL COPYRIGHTED MATERIAL –
NOT AUTHORIZED FOR FURTHER REPRODUCTION OR
DISTRIBUTION WITHOUT PERMISSION FROM UL
Documents
Document Sharing Hub
Full document details: UL 982 2009

11.3.4 The flexible cord shall be restrained from any rotation that causes movement of internal wiring at splices and terminals.

11.3.5 If a knot in a flexible cord serves as strain relief, a surface with which the knot may come in contact shall be free from projections, sharp edges, burrs, fins, and the like, which may cause abrasion of the insulation of the conductors.

11.4 Cord bushings

11.4.1 At a point where a flexible cord or internal wiring passes through an opening in a wall, barrier, or enclosing case, and if subject to motion (flexing), there shall be an appropriate bushing or the equivalent which shall be substantial, reliably secured in place, and shall have a smooth, well-rounded surface against which the insulation may bear. If Type SPT-1 or SPT-2 is employed, if the wall or barrier is of metal, and if the construction is such that the cord may be subjected to strain or motion an insulating bushing shall be provided.

11.4.2 If the cord hole is in wood, porcelain, phenolic composition, or other nonconducting material, a smooth, well-rounded surface is considered to be equivalent to a bushing.

11.4.3 Vulcanized fiber may be employed if the bushing is not less than 3/32 inch (2.4 mm) thick and is so formed and secured in place that it will not be affected adversely by moisture in normal use of the appliance.

11.4.4 At any point in an appliance, a bushing of the same material as, and molded integrally with the supply cord is acceptable on a Type SPT-1 or heavier cord if the built-up section is not less than 1/16 inch (1.6 mm) thick at the point where the cord passes through the enclosure.

11.4.5 An insulated metal grommet may be accepted instead of an insulating bushing, provided that the insulating material used is not less than 1/32 inch (0.8 mm) in thickness and fills completely the space between the grommet and the metal in which it is mounted.

12 Power Supply Connections – Permanently-Connected Appliances

12.1 General

12.1.1 Except as noted in 12.1.3, a permanently connected appliance (an appliance intended for permanent connection to the power supply) shall have provision for connection of one of the wiring systems that, in accordance with the National Electrical Code, ANSI/NFPA 70, is appropriate for the appliance.

12.1.2 Sheet metal to which a wiring system is to be connected in the field shall have a minimum thickness of 0.032 inch (0.81 mm) if uncoated steel, a minimum thickness of 0.034 inch (0.86 mm) if galvanized steel, and a minimum thickness of 0.045 inch (1.14 mm) if nonferrous.

12.1.3 A stationary appliance may be acceptable if provided with a short length (a maximum of 8 ft or 2.44 m) of Type S, SO, ST, or STO cord and an attachment plug for supply connection. The investigation of such a feature will include consideration of the utility of the appliance and the necessity of having it readily detachable from its source of supply by means of the plug.

UL COPYRIGHTED MATERIAL –
NOT AUTHORIZED FOR FURTHER REPRODUCTION OR
DISTRIBUTION WITHOUT PERMISSION FROM UL
Documents
Document Sharing Hub
Full document details: UL 982 2009

12.1.4 A terminal compartment or box in which connections to the power supply circuit will be made shall be located such that:

a) During the making of and inspection of electrical connections in the compartment, internal wiring and electrical components will not be exposed to mechanical abuse or stress; and

b) After the appliance has been installed as intended, such connections will be readily accessible for inspection.

12.1.5 A terminal compartment shall be so attached to the appliance as to be prevented from turning with respect to the wiring terminals.

12.2 Wiring terminals

12.2.1 A wiring terminal is considered to be a terminal to which a wire may be connected in the field, unless the wire and a means of making the connection (a pressure terminal connector, soldering lug, soldered loop, crimped eyelet, and the like), factory-assembled to the wire, are provided as a part of the appliance.

12.2.2 A permanently connected appliance shall be provided with wiring terminals for the connection of the conductors having an ampacity in accordance with the National Electrical Code, ANSI/NFPA 70, or the appliance shall be provided with leads for such connection.

12.2.3 A wiring terminal shall be provided with a soldering lug or pressure terminal connector securely fastened in place (for example, firmly bolted or held by a screw), except that a wire-binding screw may be employed at a wiring terminal intended to accommodate a 10 AWG (5.3 mm^2) or smaller conductor if upturned lugs or the equivalent are provided to hold the wire in position.

12.2.4 A wiring terminal shall be prevented from turning.

12.2.5 Except as noted in 12.2.6, the free length of a lead inside an outlet box or wiring compartment shall be 6 inches (152 mm) or more if the lead is intended for field connection to an external circuit.

12.2.6 The lead may be less than 6 inches (152 mm) in length if it is evident that the use of a longer lead might result in an adverse condition.

12.2.7 A wire-binding screw at a wiring terminal shall not be smaller than No. 10, except that a No. 8 screw may be used at a terminal intended for the connection of a 14 AWG (2.1 mm^2) or smaller conductor, and a No. 6 screw may be used for the connection of a 16 or 18 AWG (1.3 or 0.82 mm^2) conductor. See 12.2.8.

12.2.8 It should be noted that, according to the National Electrical Code, ANSI/NFPA 70, 14 AWG (2.1 mm^2) is the smallest conductor that may be used for branch-circuit wiring, and thus is the smallest conductor that may be anticipated at a terminal for connection of a power-supply wire.

12.2.9 A terminal plate tapped for a wire-binding screw shall be of metal with a minimum thickness of 0.050 inch (1.27 mm) and shall not have less than two full threads in the metal, except that a special alloy plate a maximum of 0.050 inch (1.27 mm) thick and a minimum of 0.030 inch (0.76 mm) thick is acceptable if the tapped threads have appropriate mechanical strength.

UL COPYRIGHTED MATERIAL –
NOT AUTHORIZED FOR FURTHER REPRODUCTION OR
DISTRIBUTION WITHOUT PERMISSION FROM UL
Documents
Document Sharing Hub
Full document details: UL 982 2009

12.2.10 A terminal plate formed from stock having the minimum required thickness, as given in 12.2.9, may have the metal extruded at the tapped hole to provide two full threads for the binding screw.

12.2.11 Upturned lugs or a cupped washer shall be capable of retaining a supply conductor of the size indicated in 12.2.2 under the head of the screw or washer.

12.2.12 A wire-binding screw shall thread into metal.

12.3 Grounded terminals and leads

12.3.1 A permanently connected appliance employing a lampholder of the Edison-screw-shell type, or a single-pole switch or overcurrent protective device other than an automatic control, shall have one terminal or lead identified for the connection of the grounded conductor of the supply circuit. The identified terminal or lead shall be the one that is electrically connected to screw shells of lampholders and to which no switches or overcurrent protective devices of the single-pole type other than automatic controls without a marked OFF position are connected.

12.3.2 A terminal intended for the connection of a grounded supply conductor shall be of or plated with metal that is substantially white in color and shall be readily distinguishable from the other terminals, or proper identification of that terminal shall be clearly shown in some other manner, such as on an attached wiring diagram. A lead intended for the connection of a grounded power-supply conductor shall be finished white or natural grey color and shall be readily distinguishable from the other leads.

12.3.3 The surface of an insulated lead intended solely for the connection of an equipment-grounding conductor shall be green with or without one or more yellow stripes, and no other lead shall be so identified.

12.3.4 A terminal solely for connection of an equipment-grounding conductor shall be capable of securing a conductor of the size intended for the particular application, in accordance with the National Electrical Code, ANSI/NFPA 70.

12.3.5 A wire-binding screw intended for the connection of an equipment grounding conductor shall be identified by:

a) Use of a green-colored head that is slotted or hexagonal, or both; or

b) The grounding symbol illustrated in Figure 12.1 on or adjacent to the terminal or on a wiring diagram provided on the product.

UL COPYRIGHTED MATERIAL –
NOT AUTHORIZED FOR FURTHER REPRODUCTION OR
DISTRIBUTION WITHOUT PERMISSION FROM UL
Documents
Document Sharing Hub
Full document details: UL 982 2009

Figure 12.1
Grounding symbol

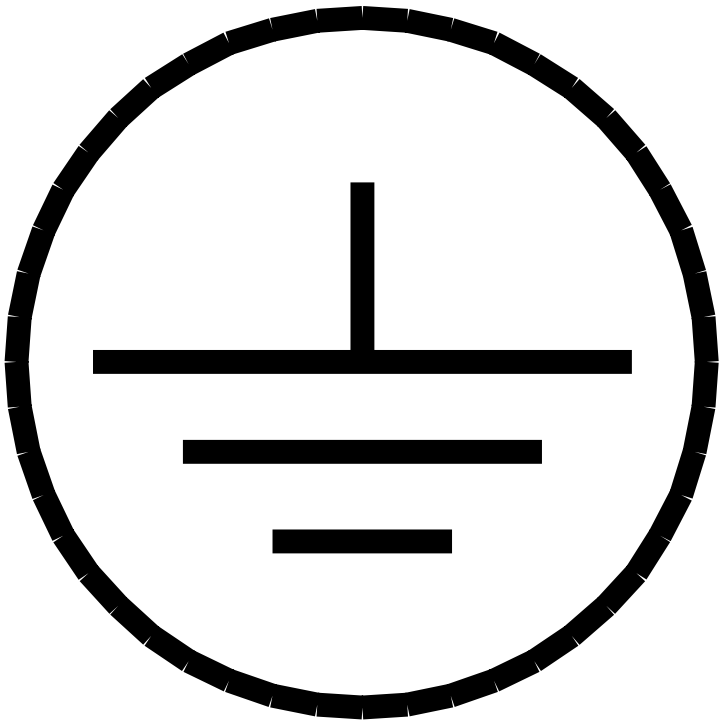

12.3.6 A pressure wire connector intended for the connection of such a conductor shall be identified by:

a) Being marked ″G,″ ″GR,″ ″GND,″ ″ Ground,″ ″Grounding,″ or the like; or

b) A marking on a wiring diagram provided on the appliance; or

c) The grounding symbol illustrated in Figure 12.1 on or adjacent to the terminal or on a wiring diagram provided on the product.

12.3.7 The wire binding screw or pressure wire connector shall be located that it is unlikely to be removed during servicing of the appliance.

UL COPYRIGHTED MATERIAL –
NOT AUTHORIZED FOR FURTHER REPRODUCTION OR
DISTRIBUTION WITHOUT PERMISSION FROM UL
Documents
Document Sharing Hub
Full document details: UL 982 2009

13 Internal Wiring

13.1 The internal wiring and connections between parts of an appliance shall be enclosed or guarded, except that a length of flexible cord may be employed for external connections if flexibility is essential.

13.2 For the purpose of these requirements the internal wiring of an appliance is considered to be all the interconnecting wiring from the point where the power-supply cord of a cord-connected appliance enters the enclosure, or from the wiring terminals or leads for power-supply connections of a fixed appliance, even though some of this may be in the form of flexible cord.

13.3 The protection of insulated wiring and of wire providing grounding continuity, as required by 13.1, is considered to exist if, when judged as though it were magnet wire, the wiring is acceptable according to 7.8. Internal wiring not so protected may be accepted if it is so secured within the enclosure that it is unlikely to be subjected to stress or physical abuse.

13.4 Unless it is to be judged as an uninsulated live part, insulated internal wiring of an appliance (including a grounding conductor) shall consist of wire that is appropriate for the particular application, when considered with respect to:

a) The temperature and voltage to which the wiring is likely to be subjected;

b) Exposure to oil, grease, or other substances likely to have a deleterious effect on the insulation;

c) Exposure to moisture; and

d) Other conditions of service to which it is likely to be subjected.

13.5 Thermoplastic-insulated wire employed for internal wiring shall be standard building wire or appliance-wiring material that is provided with insulation appropriate for the purpose.

13.6 Wiring shall be protected from sharp edges (including male screw threads), burrs, fins, moving parts, and other agents that might abrade the insulation of conductors.

13.7 A hole by which insulated wires pass through a sheet metal wall within the overall enclosure shall be provided with a smoothly rounded bushing or shall have smooth surfaces, free of burrs, fins, sharp edges, and the like, upon which the wires may bear, to prevent abrasion of the insulation.

13.8 Insulated wires may be bunched and passed through a single opening in a metal wall within the enclosure of the appliance.

13.9 All splices and connections shall be mechanically secure and shall provide an effective electrical contact.

13.10 A soldered connection shall be such that mechanical security will be provided. If the nature and/or location of a soldered connection is such that loosening of the solder is likely to occur, and if such loosening of the solder will result in any grounding or short-circuiting of live parts or other adverse condition, the connection shall be made mechanically secure before being soldered.

UL COPYRIGHTED MATERIAL –
NOT AUTHORIZED FOR FURTHER REPRODUCTION OR
DISTRIBUTION WITHOUT PERMISSION FROM UL
Documents
Document Sharing Hub
Full document details: UL 982 2009

13.11 A wire-binding screw or nut shall be provided with means to prevent it from being loosened due to vibration if such loosening might result in a risk of fire, electric shock or injury to persons.

13.12 A risk of fire, electric shock or injury to persons is not considered to result if a spade lug with upturned ends or a closed-loop lug is used.

13.13 Unless spacings cannot be reduced so as to create a risk of fire, electric shock or injury to persons, a splice shall be provided with insulation equivalent to that of the wires involved.

13.14 In a determination of whether or not splice insulation consisting of coated-fabric, thermoplastic, or other material is acceptable, consideration is to be given to such factors as its dielectric properties, heat-resistance and moisture-resistance characteristics, and the like. Thermoplastic insulating tape wrapped over a sharp edge is not acceptable. An insulated splicing device is acceptable within the limits of its voltage and temperature ratings.

13.15 Stranded internal wiring shall be so connected to a wire-binding screw that loose strands of wire will be prevented from contacting other live parts not always of the same polarity as the wire and from contacting dead metal parts. This may be accomplished by use of pressure thermal connectors, soldering lugs, crimped eyelets, soldering all strands of the wire together, or other equivalent means.

13.16 An internal wiring bushing of neoprene or polyvinyl chloride may be used anywhere inside an appliance if the edges of the hole in which the bushing is mounted are smooth and free from burrs, fins and the like.

14 Live Parts

14.1 A current-carrying part shall be of silver, copper, a copper alloy or other material equivalent for the purpose.

14.2 Plated iron or steel may be used for a current-carrying part:

a) Whose temperature during normal operation is more than 100°C (212°F);

b) Within a motor or associated governor; or

c) If acceptable in accordance with 2.1.

Plain (unplated) iron or steel is not acceptable. The foregoing restrictions do not apply to stainless steel and other corrosion-resistant alloys.

14.3 An uninsulated live part shall be so secured to the base or mounting surface that it will be prevented from turning or shifting in position if such motion may result in a reduction of spacings below the minimum acceptable values.

14.4 Friction between surfaces is not acceptable as the sole means to prevent the turning of a live part, but a lock washer properly applied is acceptable for this purpose.

UL COPYRIGHTED MATERIAL –
NOT AUTHORIZED FOR FURTHER REPRODUCTION OR
DISTRIBUTION WITHOUT PERMISSION FROM UL
Documents
Document Sharing Hub
Full document details: UL 982 2009

15 Electrical Insulation

15.1 Insulating washers, bushings, and the like, and bases or supports for the mounting of live parts shall be of a moisture-resistant material that is acceptable for the particular application.

15.2 Insulating material employed in an appliance is judged with respect to its use in the particular application. Materials such as mica, some molding compounds, and certain refractory materials are capable of being used as the sole support of current-carrying parts; and some other materials that are not intended for general use, such as magnesium oxide, are capable of being used in conjunction with other insulating materials when so located and protected such that the risk of physical injury and the absorption of moisture are reduced. If a separate investigation is required to determine the fitness of a material as an insulator, the key factors to be examined are its physical strength, dielectric-properties, insulation-resistance, heat-resistant qualities, the degree to which it is enclosed or protected, and any other features pertinent to the risk of electric shock, fire and injury to persons involved, in conjunction with the conditions of actual service. All of the properties mentioned above are to be investigated with respect to the effects of thermal aging.

15.3 Screws or other fastenings used to mount or support small fragile, insulating parts are not to be so tight as to crack or break such parts with expansion and contraction.

15.4 Vulcanized fiber may be used for insulating bushings, washers, separators, and barriers, but not as the sole support for uninsulated live parts if shrinkage, moisture absorption, or warpage may introduce current leakage or other adverse conditions. Thermoplastic materials may be employed for the sole support of uninsulated live parts if found to have physical strength and rigidity, resistance to heat, resistance to flame propagation, dielectric strength, and other properties appropriate for the application. All of the properties mentioned above are to be considered with respect to the effects of thermal aging.

15.5 A small molded part, such as a terminal block, shall have such physical strength and rigidity that it will withstand the stresses of actual service.

16 Motors

16.1 General

16.1.1 A motor shall be acceptable for the particular application, and shall be capable of handling the ″maximum normal load″ of the appliance as described in 36.1.11 – 36.26.2 without introducing a risk of fire, electric shock, or injury to persons.

16.1.2 A motor winding shall be resistant to the absorption of moisture and shall be formed and assembled in a uniform manner, such as free of loose turns, irregular crossovers, and poor ties.

16.1.3 With reference to the requirement in 16.1.2, magnet wire is not required to be additionally treated to resist absorption of moisture, but fiber slot liners, cloth coil wrap and similar moisture-absorptive materials should be provided with impregnation or otherwise treated to resist moisture absorption.

16.1.4 A brush holder assembly shall be constructed so that if a carbon brush becomes worn away to the maximum possible extent, the spring or other parts of the assembly shall not defeat the required spacings between live parts and dead metal parts, or result in a live part becoming accessible.

UL COPYRIGHTED MATERIAL –
NOT AUTHORIZED FOR FURTHER REPRODUCTION OR
DISTRIBUTION WITHOUT PERMISSION FROM UL
Documents
Document Sharing Hub
Full document details: UL 982 2009

16.1.5 Motors that are provided with thermoplastic coil forms or thermoplastic insulating material shall comply with the requirements for Thermoplastic Coil Forms and Thermoplastic Insulating Material, Section 60.

16.2 Overload protection

16.2.1 An appliance employing a motor rated at 1 hp or less and intended to be automatically controlled, as indicated in 16.2.2, shall incorporate thermal or overcurrent protection in accordance with 16.2.5.

16.2.2 An appliance is considered to be automatically controlled under any one or more of the following conditions:

a) If the repeated starting of the appliance, beyond one complete predetermined cycle of operation, to the point where some form of limit switch opens the circuit, is independent of any manual control.

b) If, during any single predetermined cycle of operation, the motor is caused to stop and restart one or more times.

c) If, upon energizing the appliance, the initial starting of the motor may be intentionally delayed beyond normal, conventional starting.

d) If, during any single predetermined cycle of operation, automatic changing of the mechanical load may reduce the motor speed to the point of reestablishing the starting-winding connections to the supply circuit.

16.2.3 An automatically controlled blender is considered to comply with 16.2.1 if it is provided with locked-rotor protection in accordance with 16.2.5.

16.2.4 The motor of an ice cream freezer (bucket type), butter churn or pasta mixer-extruder shall comply with the locked rotor protection in 16.2.5.

Exception: An ice cream freezer, butter churn or pasta mixer-extruder motor is considered to comply with the requirement in 16.2.4, if when the ice cream freezer, butter churn or pasta mixer-extruder container and the driven member are frozen together, the motor is energized and the temperature limits specified in 16.2.5 are not exceeded.

16.2.5 Motor-overload protection required for an appliance shall consist of one of the following:

a) Thermal protection complying with the applicable requirements in the Standard for Overheating Protection for Motors, UL 2111.

Exception No. 1: For an appliance that includes a control that positively and reliably limits the length of the time the appliance can operate, the duration of the temperature test and the endurance test, both under locked-rotor conditions, may be less than that specified but shall not be less than the time the appliance can operate.

Exception No. 2: A motor intended to move air only by means of an air-moving fan that is integrally attached, keyed, or otherwise fixed to the motor shaft is not required to have running-overload protection.

UL COPYRIGHTED MATERIAL –
NOT AUTHORIZED FOR FURTHER REPRODUCTION OR
DISTRIBUTION WITHOUT PERMISSION FROM UL
Documents
Document Sharing Hub
Full document details: UL 982 2009

Exception No. 3: A shaded-pole motor with a 2:1 or smaller ratio between locked-rotor and no-load currents and a 1 A or smaller difference between no-load and locked-rotor currents is considered to have acceptable overload protection if it is protected against locked-rotor conditions only.

b) Impedance protection complying with the Standard for Overheating Protection for Motors, UL 2111, when the motor is tested as used in the appliance under locked-rotor conditions.

c) Other protection that is shown by test to be equivalent to the protection as specified in (a).

16.2.6 The functioning of a motor-protective device provided as part of an appliance (whether such device is required or not) shall not result in a risk of fire or injury to persons. Compliance shall be determined by the following:

a) Limited Short Circuit Test in accordance with the Standard for Overheating Protection for Motors, UL 2111, and one or more of the following as applicable :

1) 16.2.1 (for automatically-controlled appliances);

2) Continuous Operation Test (for appliances actuated by a momentary contact switch), Section 46;

3) Abnormal Operation Test (for appliances with metal or partly-metallic enclosures), Section 47; or

4) Enclosures of Polymeric Material for Portable Appliances (for appliances with polymeric enclosures), Section 58.

b) For appliances provided with an automatic reset overload-protective device, automatic restarting shall not result in injury to persons. See 28.2.

c) Appliances provided with a self-holding protector, where automatic restarting would result in a risk of injury to persons, shall be subjected to the testing of 47.7.

17 Switches

17.1 A switch shall be appropriate for the particular application, and shall have a current and voltage rating not less than that of the load which it controls when the appliance is operated normally.

Exception: When the suitability of the current and voltage ratings of a switch have not been determined, the switch may be tested per 52.1 and 53.1.

17.1 effective June 19, 2011

17.2 In applying the requirement in 17.1 to a switch controlling a motor, the switch shall have a horsepower rating not less than that of the controlled motor.

Exception No. 1: A switch with suitable general purpose voltage and current ratings, but without a suitable horsepower rating, may be used if it complies with the Switch Overload Test of 52.1 or if:

a) The power factor in the locked rotor condition is at least 80 percent; and

UL COPYRIGHTED MATERIAL –
NOT AUTHORIZED FOR FURTHER REPRODUCTION OR
DISTRIBUTION WITHOUT PERMISSION FROM UL
Documents
Document Sharing Hub
Full document details: UL 982 2009

b) The locked rotor current is not more than 150 percent of the switch rating, for switches rated 10 A or less; or

c) The locked rotor current is not more than 125 percent of the switch rating, for switches rated greater than 10 A.

Exception No. 2: A switch with a suitable resistive voltage rating and a resistive current rating not less than twice the full-load current corresponding to the motor horsepower rating, per Article 430 of the National Electrical Code, ANSI/NFPA 70, may be used if it complies with the Switch Overload Test of 52.1. Where the horsepower rating of the motor is not specified, the resistive current rating shall not be less than twice the rating of the appliance.

17.3 With reference to the requirement in 17.1, the resistive current rating of a switch that controls an inductive load other than a motor, such as a transformer or relay, shall not be less than twice the rated full-load current of the inductive load.

17.4 If, when energized, an appliance has moving parts that are likely to cause injury to persons, a motor control switch shall be provided on the appliance and shall have a plainly identified OFF position, or ON and OFF positions, in accordance with 17.5 and 17.6 as applicable. See also 22.4 for electronic controls employed in place of a motor control OFF switch.

Exception: If a momentary contact switch with no means for locking in the on condition is used as the motor control switch, the ON and OFF markings may be omitted.

17.4 effective June 19, 2011

17.5 With reference to the requirement in 17.4, the OFF position of the switch shall be marked with either one or both of the following:

a) The word ″OFF″, or

b) The symbol shown in Figure 17.2. See also 68.6.

17.5 effective June 19, 2011

17.6 With reference to the requirement in 17.4, the ON position of the switch, when identified, shall be marked with one or both of the following, as determined by the marking of the OFF position of the switch:

a) The word ″ON″ when the OFF position of the switch is marked with the word ″OFF″, or

b) The symbol shown in Figure 17.1, when the OFF position of the switch is marked with the symbol shown in Figure 17.2. See also 68.6.

17.6 effective June 19, 2011

UL COPYRIGHTED MATERIAL –
NOT AUTHORIZED FOR FURTHER REPRODUCTION OR
DISTRIBUTION WITHOUT PERMISSION FROM UL
Documents
Document Sharing Hub
Full document details: UL 982 2009

Figure 17.1
Symbol for ON position

IEC 417, Symbol 5007

Figure 17.2
Symbol for OFF position

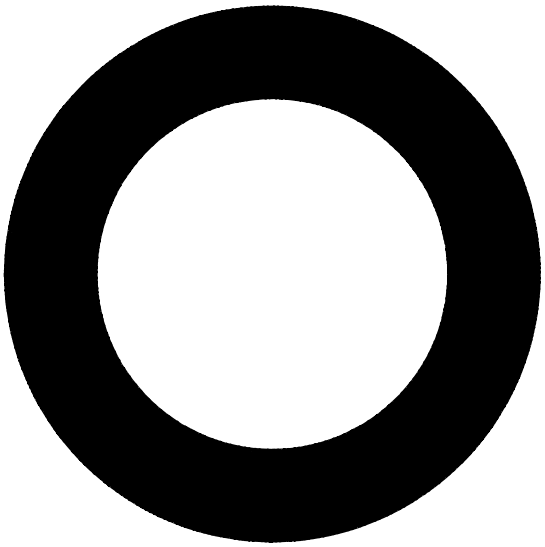

IEC 417, Symbol 5008

UL COPYRIGHTED MATERIAL –
NOT AUTHORIZED FOR FURTHER REPRODUCTION OR
DISTRIBUTION WITHOUT PERMISSION FROM UL

Documents
Document Sharing Hub

Full document details: UL 982 2009

17.7 If a portable appliance employs a motor rated at more than 1/3 horsepower, a motor-control switch for the motor shall be provided in the appliance. See 19.8.

17.8 An appliance shall not employ a through-cord switch.

17.9 A manually operated, line-connected, single pole switch, a triac controlling a motor, or other control device, intended for appliance ON-OFF operation shall be connected to the ungrounded conductor of the power-supply cord. Table 11.3 specifies the polarity identification of the power-supply cord conductors.

18 Capacitors

18.1 A capacitor of a capacitor motor and a capacitor connected across the line (such as a capacitor for radio-interference elimination) shall be housed within an enclosure or container that protects the plates against physical damage and prevents the emission of flame or molten material resulting from failure of the capacitor. Except as noted in 18.2 and 18.4, the container shall be sheet steel having an average thickness of 0.020 inch (0.51 mm) or shall be so constructed as to afford equivalent protection.

18.2 The container of a capacitor may be of sheet metal less in thickness than that mentioned in 18.1 or of other appropriate material if the capacitor is mounted in an enclosure that houses other parts of the appliance and if such a box, case, and the like is acceptable for the enclosure of live parts.

18.3 Under both normal and abnormal conditions of use, a capacitor employing a dielectric medium more combustible than askarel shall not cause or increase a risk of electric shock or fire and shall be protected against expulsion of the dielectric medium.

18.4 The individual enclosure of an electrolytic capacitor with means for venting is required to be such as to provide protection against physical injury only and the requirement for minimum enclosure thickness does not apply. The individual enclosure of an electrolytic capacitor not provided with means for venting and with an opening more than 1/16 inch (1.6 mm) wide between the capacitor enclosure and the motor need not comply with the requirement for enclosure thickness given in 18.1, if it is found acceptable in accordance with the following. Several samples of the capacitor mounted in the usual manner and with cotton placed around openings in the enclosure, are to be subjected to such over voltage as to cause failure. If the cotton ignites upon failure of the capacitor, the results are not acceptable.

18.5 The voltage rating of a capacitor, other than a motor capacitor, shall be no less than the maximum steady-state potential to which the capacitor is subjected during operation of the appliance.

UL COPYRIGHTED MATERIAL –
NOT AUTHORIZED FOR FURTHER REPRODUCTION OR
DISTRIBUTION WITHOUT PERMISSION FROM UL
Documents
Document Sharing Hub
Full document details: UL 982 2009

19 Spacings

19.1 A circuit derived from a source of supply classified in 5.16 as a line-voltage circuit by connecting a resistance in series with the supply circuit as a means for limiting the voltage and current, is not considered to be a low-voltage circuit as described in 5.17.

19.2 All uninsulated live parts connected to different (line-voltage, low-voltage) circuits shall be spaced from one another as though they were parts of opposite polarity, in accordance with the requirements in 19.4 and 19.5 and shall be judged on the basis of the highest voltage involved.

19.3 The spacing between uninsulated live parts of opposite polarity and between such parts and dead metal which may be grounded in service is not specified for parts of circuits that are classified as low-voltage in 5.17.

19.4 The spacing between wiring terminals (see 12.2.1) of opposite polarity, and the spacing between a wiring terminal and any other uninsulated metal part (dead or alive) not of the same polarity, shall not be less than 1/4 inch (6.4 mm) between terminals and other uninsulated metal parts not always of the same polarity (applies to the sum of the spacings involved where an isolated dead part is interposed).

19.5 Except as noted in 19.7 and 19.9, the spacing between uninsulated live parts of opposite polarity, uninsulated live parts and a dead metal part that is exposed to contact by persons or that may be grounded, and uninsulated live parts and uninsulated (or not acceptably insulated) parts in the secondary circuit, shall not be less than the value indicated in Table 19.1. If an uninsulated live part is not rigidly fixed in position (by means other than friction between surfaces), or if a movable dead metal part is in proximity to an uninsulated live part, the construction shall be such that the required minimum spacing will be maintained.

Table 19.1
Minimum spacings at other than supply wiring terminals

Potential involved, volts	Rating of motor employed [Motor diameter 7 inches (178 mm) or less[a]]	Minimum Spacings	
		Over surface inch (mm)	Through air, inch (mm)
0 – 130	1/3 horsepower (250 W output) or less	1/16 (1.6)	1/16 (1.6)
	More than 1/3 horsepower	3/32 (2.4)	3/32 (2.4)

NOTE – Film-coated wire is considered to be an uninsulated live part.

[a] This is the diameter, measured in the plane of laminations of the circle circumscribing the stator frame, excluding lugs, fins, boxes, and similar parts used solely for motor mounting, cooling, assembly, or connection.

19.6 In applying Table 19.1 to an appliance incorporating two or more motors of different sizes, the spacings inside each motor are judged on the basis of the size of that motor and the spacings elsewhere in the appliance are judged on the basis of the size of the largest motor in the appliance.

19.7 The spacing requirements given in 19.4 do not apply to the inherent spacings of a component of the appliance, such as a snap switch; such spacings are judged on the basis of the requirements for the component.

UL COPYRIGHTED MATERIAL –
NOT AUTHORIZED FOR FURTHER REPRODUCTION OR
DISTRIBUTION WITHOUT PERMISSION FROM UL
Documents
Document Sharing Hub
Full document details: UL 982 2009

19.8 In the application of 16.2.1 and Table 19.1 to a motor not rated in horsepower, use is to be made of the appropriate table of the National Electrical Code, ANSI/NFPA 70 which gives the relationship between horsepower and full-load currents for motors. For a universal motor, the table applying to a single-phase, alternating current motor is to be used if the appliance is marked for use on alternating current only; otherwise, the table applying to direct-current motors is to be used.

19.9 If an isolated dead metal part is interposed between or is in close proximity to live parts of opposite polarity, to a live part and an exposed dead metal part, or to a live part and a dead metal part that may be grounded, the spacing may not be less than 3/64 inch (1.2 mm) between the isolated dead metal part and any one of the other parts previously mentioned, provided the total spacing between the isolated dead metal part and the two other parts is not less than the value indicated in Table 19.1.

19.10 Except as indicated in 19.11, an insulating lining or barrier of vulcanized fiber or similar materials employed where spacings would otherwise be unacceptable shall not be less than 1/32 inch (0.8 mm) thick and shall be so located or of such material that it will not be adversely affected by arcing; except that vulcanized fiber not less than 1/64 inch (0.4 mm) thick may be used in conjunction with an air spacing of not less than 50 percent of the spacing required for air alone.

19.11 Insulating material having a thickness less than that indicated in 19.10 may be used if, upon investigation, it is found to be appropriate for the particular application.

19.12 A printed wiring board with spacings between opposite polarity circuits (other than a low-voltage circuit, see 19.3) less than those required is acceptable provided that the spacings:

a) Are located on a portion of the printed wiring board provided with a conformal coating that complies with the requirements in the Standard for Polymeric Materials – Use in Electrical Equipment Evaluations, UL 746C, and the dielectric voltage-withstand test described in 37.6; or

b) Are located on the load side of a resistor such that a short circuit from the load side of the resistor to the other side of the line does not result in the resistor power dissipation exceeding the resistor wattage rating; or

c) Comply with the spacing requirements in the Standard for Solid-State Controls for Appliances, UL 244A; or

d) Comply with the applicable requirements in the Standard for Insulation Coordination Including Clearances and Creepage Distances for Electrical Equipment, UL 840.

UL COPYRIGHTED MATERIAL –
NOT AUTHORIZED FOR FURTHER REPRODUCTION OR
DISTRIBUTION WITHOUT PERMISSION FROM UL
Documents
Document Sharing Hub
Full document details: UL 982 2009

20 Grounding

20.1 Required grounding

20.1.1 The following types of appliances shall have provision for grounding:

a) An appliance for use in damp or wet locations (see 5.9, 5.10, and 5.26);

b) An appliance intended for outdoor use;

c) An appliance intended to be used on a circuit operating at more than 150 V to ground; and

d) An appliance intended for permanent connection to the supply source.

Exception: An appliance intended to operate at a nominal potential of 240 V and any other potential greater than 150 V is to be provided with means for grounding in accordance with 20.2.2, unless the marked rating on the appliance is 120/240 V and the appliance is wired for a nominal 120 V connection, or the appliance is otherwise marked to indicate that it is to be connected to a circuit operating at 150 V or less to ground.

20.2 Continuity

20.2.1 If a grounding means is provided on an appliance, whether required or not, all exposed dead metal parts and all dead metal parts within the enclosure which are exposed to contact during any servicing operation and which are likely to become energized shall be connected to the grounding means. Servicing here mentioned means user servicing, not repairs made by a qualified service man.

20.2.2 The following are considered to constitute means for grounding:

a) In an appliance intended to be permanently connected by a metal-enclosed wiring system – a knockout or equivalent opening in the metal enclosure of the appliance.

b) In an appliance intended to be permanently connected by a nonmetal-enclosed wiring system (for example, nonmetallic-sheathed cable) – an equipment-grounding terminal or lead.

c) In a cord-connected appliance – an equipment-grounding conductor in the cord.

20.2.3 An appliance marked as being provided with double insulation shall not be provided with a means for grounding.

UL COPYRIGHTED MATERIAL –
NOT AUTHORIZED FOR FURTHER REPRODUCTION OR
DISTRIBUTION WITHOUT PERMISSION FROM UL
Documents
Document Sharing Hub
Full document details: UL 982 2009