UL 985

STANDARD FOR SAFETY

Household Fire Warning System Units

Documents
Document Sharing Hub

Full document details: UL 985 2025

Documents
Document Sharing Hub

Full document details: UL 985 2025

UL Standard for Safety for Household Fire Warning System Units, UL 985

Sixth Edition, Dated May 15, 2015

Summary of Topics

This revision to ANSI/UL 985 dated May 19, 2025 includes the following changes in requirements:

> ***– Jarring Test Methods for Desktop, Freestanding, Non-wall and Non-ceiling Type Mounted Products; Section 49 (deleted), Section 49A***

Text that has been changed in any manner or impacted by ULSE's electronic publishing system is marked with a vertical line in the margin.

The new and revised requirements are substantially in accordance with Proposal(s) on this subject dated October 4, 2024 and March 21, 2025.

All rights reserved. No part of this publication may be reproduced, stored in a retrieval system, or transmitted in any form by any means, electronic, mechanical photocopying, recording, or otherwise without prior permission of ULSE Inc. (ULSE).

ULSE provides this Standard "as is" without warranty of any kind, either expressed or implied, including but not limited to, the implied warranties of merchantability or fitness for any purpose.

In no event will ULSE be liable for any special, incidental, consequential, indirect or similar damages, including loss of profits, lost savings, loss of data, or any other damages arising out of the use of or the inability to use this Standard, even if ULSE or an authorized ULSE representative has been advised of the possibility of such damage. In no event shall ULSE's liability for any damage ever exceed the price paid for this Standard, regardless of the form of the claim.

Users of the electronic versions of UL's Standards for Safety agree to defend, indemnify, and hold ULSE harmless from and against any loss, expense, liability, damage, claim, or judgment (including reasonable attorney's fees) resulting from any error or deviation introduced while purchaser is storing an electronic Standard on the purchaser's computer system.

Documents
Document Sharing Hub

Full document details: UL 985 2025

No Text on This Page

Documents
Document Sharing Hub

Full document details: UL 985 2025

MAY 15, 2015
(Title Page Reprinted: May 19, 2025)

UL 985

Standard for Household Fire Warning System Units

First Edition – January, 1973
Second Edition – April, 1980
Third Edition – June, 1985
Fourth Edition – July, 1994
Fifth Edition – May, 2000

Sixth Edition

May 15, 2015

This ANSI/UL Standard for Safety consists of the Sixth edition including revisions through May 19, 2025.

The most recent designation of ANSI/UL 985 as an American National Standard (ANSI) occurred on May 19, 2025. ANSI approval for a standard does not include the Cover Page, Transmittal Pages, and Title Page.

Comments or proposals for revisions on any part of the Standard may be submitted to ULSE at any time. Proposals should be submitted via a Proposal Request in the Collaborative Standards Development System (CSDS) at https://csds.ul.com.

Our Standards for Safety are copyrighted by ULSE Inc. Neither a printed nor electronic copy of a Standard should be altered in any way. All of our Standards and all copyrights, ownerships, and rights regarding those Standards shall remain the sole and exclusive property of ULSE Inc.

© 2025 ULSE Inc. All rights reserved.

Documents
Document Sharing Hub

Full document details: UL 985 2025

No Text on This Page

Documents
Document Sharing Hub

Full document details: UL 985 2025

CONTENTS

INTRODUCTION

1 Scope 7
2 General 7
2.1 Components 7
2.2 Units of measurement 8
2.3 Undated references 8
3 Glossary 8
4 Instructions and Drawings 11
5 Compatibility Information 11
5.1 General 11
5.2 Method of evaluation 11
5.3 Changes affecting compatibility 12

CONSTRUCTION

6 General 12
7 Frame and Enclosure 12
7.1 General 12
7.2 Cast metal enclosures 13
7.3 Sheet metal enclosures 13
7.4 Nonmetallic enclosures 14
8 Electric Shock 15
9 Enclosure Openings 15
9.1 General 15
9.2 Enclosure top openings 16
9.3 Enclosure side openings 16
9.4 Enclosure bottom openings 20
10 Metal Covers and Doors 20
11 Glass Panels 21
12 Corrosion Protection 21
13 Insulating Material 21
14 Mounting of Electrical Components 22
15 Operating Mechanisms 23
16 Current-Carrying Parts 23
17 Grounding for Products Containing High-Voltage Circuits 23
18 Servicing Protection 26

FIELD-WIRING CONNECTIONS

19 Power Connections 27
20 Primary Power Supply 27
21 Secondary Power Supply 27
22 Batteries 27

INSTALLATION WIRING CONNECTIONS

23 General 28
24 Field-Wiring Terminals 28
25 Field-Wiring Leads 28
26 Power-Supply Cord 29
27 Strain Relief 29

AVA Documents
Document Sharing Hub
Full document details: UL 985 2025

28 Power-Limited Circuits 30

INTERNAL WIRING AND ASSEMBLY

29 Internal Wiring 30

GROUNDING

30 Equipment Grounding 31
31 Polarity Identification 32

COMPONENTS

32 End-of-Line Devices 32
33 Printed Wiring Boards 32
34 Bushings 32
35 Coil Windings 33
36 Switches 33
37 Lampholders and Lamps 33
38 Protective Devices 34

SPACINGS

39 General 34

PERFORMANCE

40 General 36
41 Normal Operation Test 36
41.1 Fire alarm control unit 36
41.2 Supervising stations 39
41.3 Combination control unit 40
41.4 Primary power supply 42
42 Alarm Verification Feature (Optional) 42
43 Two-Wire Smoke Detector Compatibility Tests 43
43.1 Operating voltage determination 43
43.2 Alarm threshold impedance 44
43.3 Maximum current limitation 44
43.4 Multiple detector alarm capacity 44
43.5 Detectors with optional components 44
43.6 Dynamic load immunity 45
43.7 Electrical supervision 45
43.8 Maximum capacitance loading 45
43.9 Alarm reset voltage and time 45
43.10 Alarm verification (optional) 46
43.11 Minimum normal standby impedance (optional) 46
43.12 Minimum impedance where second alarm will not occur (optional) 46
44 Electrical Supervision Test 46
44.1 Power supplies 46
44.2 Interconnecting circuits and pathways 46
44.3 Trouble signals 47
44.4 Keypads 48
45 Undervoltage Operation Test 48
46 Overvoltage Operation Test 48
47 Voltage and Current Measurements 48

AVA Documents
Document Sharing Hub
Full document details: UL 985 2025

47.1 Input circuit 48
47.2 Output circuit 49
48 Power-Limited Circuits 49
48.1 General 49
48.2 Maximum voltage 51
48.3 Maximum current 51
48.4 VA_{max} (not inherently limited circuits only) 51
49 Jarring Test 51
49A Jarring Test 52
50 Component Temperature Test 53
51 Charging Current Test 57
51.1 General 57
51.2 Discharged battery 57
51.3 Charged battery 58
51.4 Discharged battery – second trial 58
52 Overload Test 58
52.1 Control unit 58
52.2 Separately energized circuits 59
53 Endurance Test 59
53.1 Control unit 59
53.2 Operating device 59
54 Variable Ambient Temperature Test 59
55 Humidity Test 60
56 Leakage Current Test 60
57 Electric Shock Current Test 61
58 Transient Test 65
58.1 General 65
58.2 Supply line ring wave surge voltage transients 65
58.3 Internally induced transients 66
58.4 Input/output circuit (low-voltage circuit) transients 66
59 Dielectric Voltage-Withstand Test 71
60 Component Failure Test 72
61 Audibility Test 73
62 Abnormal Operation Test 73

SHORT RANGE RADIO FREQUENCY DEVICES

63 General 74
64 Operation 74
64.1 General 74
64.2 Signaling 74
64.3 Sprinkler supervisory signals 75
64.4 Maximum duration of transmission 75
64.5 Inoperative transmitter reporting 75
64.6 Tamper signal 76
64.7 Interference protection 76
64.8 Battery status indication 76
65 Reference Level Determination 77
66 Interference Immunity 77
67 Frequency Selectivity 78
68 Time to Report Alarm 79
69 Clash 79
70 Error (Falsing) Rate 80
71 Throughput Rate 81
72 Maximum Duration of Transmission 81
73 Transmitter Stability Tests 82

AVA Documents
Document Sharing Hub
Full document details: UL 985 2025

74 Transmitter Accelerated Aging Test....82
75 Installation Instructions and User Manual....82
76 Primary Batteries Test....82
76.1 Life test....82
76.2 Battery trouble voltage determination....83
76.3 Battery replacement test....86
76.4 Butt-type connection pressure test....86
76.5 Polarity reversal test....86

MANUFACTURING AND PRODUCTION TESTS

77 Production-Line Dielectric Voltage-Withstand Test....87
78 Production-Line Grounding-Continuity Test for High-Voltage, Cord-Connected Products....87

INSTALLATION DRAWING

79 General....88

INSTRUCTIONS

80 General....90

MARKINGS

81 General....91

APPENDIX A

Standards for Components....93

APPENDIX SB INSTRUCTIONS FOR CALCULATING ATTENUATION PARAMETERS AND OPEN AREA TEST DISTANCE (D_{EOAT})

SB1 Instructions for Determining L1, L2, L3, and L4 Values....94
SB2 Determining L_w....94
SB3 Determining L_f....94
SB4 Determining L_b....94
SB5 Determining D_{EOAT}....94
SB6 Example Calculation....94

Documents
Document Sharing Hub
Full document details: UL 985 2025

INTRODUCTION

1 Scope

1.1 These requirements cover household fire warning system control units intended to be installed in accordance with the National Fire Alarm Code, ANSI/NFPA 72, and the National Electrical Code, ANSI/NFPA 70.

1.2 A household fire warning system control unit consists of a unit assembly of electrical parts having provision for connection of power supply and initiating device circuits. Provision for connection of a notification appliance circuit is also required unless an alarm sounding device is integral with the control unit. Additional terminals may be provided for the connection of supplementary devices, such as annunciators, remote switches, and the like. A secondary supply, consisting of a rechargeable battery, shall be provided integral with the control unit or provision may be provided for its connection to the control unit.

1.3 Provision for the connection to the control unit of at least one smoke detector is required unless reference is made on the installation diagram for the use of a self-contained smoke detector, such as a single- or multiple-station fire alarm device.

1.4 These requirements also apply to the use of combination systems, such as a combination fire-burglar alarm system control unit, which uses circuit wiring common to both systems. When common wiring is used for combination systems, it shall be connected in such a manner that internal fault conditions (shorts, opens, grounds) in the nonfire alarm (burglary) system circuit wiring, or faults between the fire and nonfire alarm system circuits, will not interfere with the supervision of the fire alarm system or prevent intended alarm signal transmission.

1.5 These requirements do not cover single- or multiple-station fire alarm devices, automatic fire detectors, or alarm notification appliances, such as bells, horns, carbon monoxide alarm devices, emergency initiating devices, non-emergency initiating devices, and the like. They do cover accessories which are external to the control unit and are dependent upon the control unit function, such as end-of-line devices, annunciators, and remote switches.

1.6 If a digital alarm communicator transmitter is used to transmit signals to a remote location and it is to be included as a component of the system, it shall comply with the applicable requirements in the Standard for Digital Alarm Communicator System Units, UL 1635. Otherwise the user must be notified that the off-premises transmission method has not been so investigated.

1.7 Where a unit employs security functions, it shall comply with the Standard for Household Burglar-Alarm System Units, UL 1023. Units employing medical alert functions shall comply with the Standard for Home-Health Care Signaling Equipment, UL 1637. A unit utilizing non-fire and/or non-carbon monoxide emergency and/or non-emergency signaling functions shall meet the requirements of the Standard for General-Purpose Signaling Devices and Systems, UL 2017.

2 General

2.1 Components

2.1.1 Except as indicated in 2.1.2, a component of a product covered by this standard shall comply with the requirements for that component. See Appendix A for a list of standards covering components used in the products covered by this standard.

2.1.2 A component is not required to comply with a specific requirement that:

Documents
Document Sharing Hub
Full document details: UL 985 2025

a) Involves a feature or characteristic not required in the application of the component in the product covered by this standard, or

b) Is superseded by a requirement in this standard.

2.1.3 A component shall be used in accordance with its rating established for the intended conditions of use.

2.1.4 Specific components are incomplete in construction features or restricted in performance capabilities. Such components are intended for use only under limited conditions, such as certain temperatures not exceeding specified limits, and shall be used only under those specific conditions.

2.2 Units of measurement

2.2.1 Values stated without parentheses are the requirement. Values in parentheses are explanatory or approximate information.

2.3 Undated references

2.3.1 Any undated reference to a code or standard appearing in the requirements of this standard shall be interpreted as referring to the latest edition of that code or standard.

3 Glossary

3.1 For the purpose of this standard the following definitions apply.

3.2 ALARM SIGNAL – An audible signal indicating an emergency fire condition requiring immediate action, as an alarm initiated from a manual box, smoke, or heat detector.

3.3 ALARM VERIFICATION – Operation of a control unit in conjunction with a related smoke monitoring head or an initiating device circuit in which an alarm signal from a smoke detector is confirmed one or more times over a predetermined period before the control unit will indicate an alarm. This predetermined period consists of an alarm retard-reset period and an alarm confirmation period. The alarm retard period is the delay time designed in the control unit while the alarm reset period is the power-up time for the detector. See Figure 3.1.

Documents
Document Sharing Hub
Full document details: UL 985 2025

Figure 3.1

Alarm verification – timing diagram

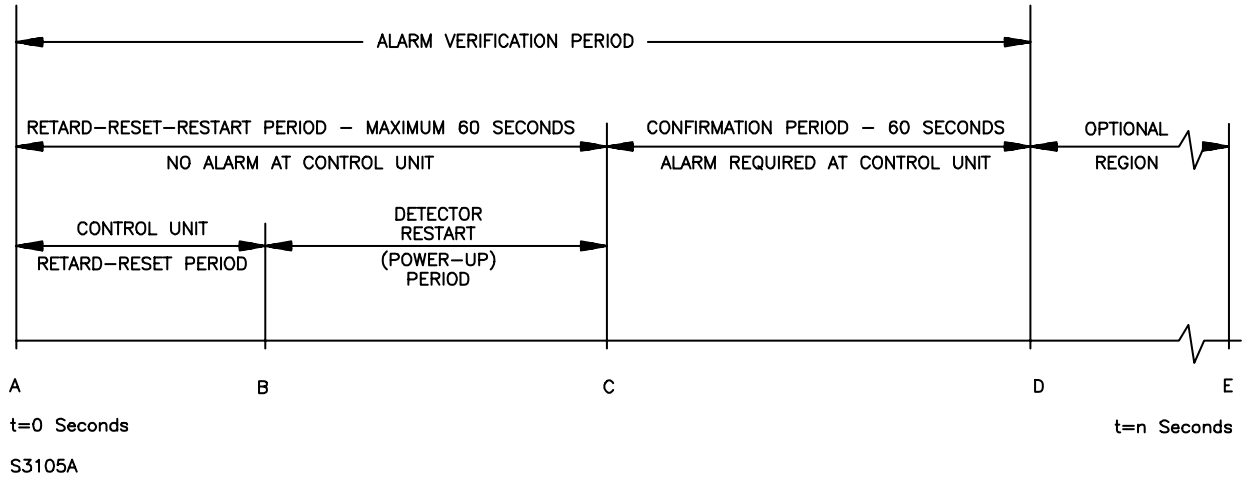

A – Smoke detector goes into alarm.

AB – RETARD-RESET PERIOD (Control Unit) – Control unit senses detector in alarm and retards (delays) alarm signal, usually by de-energizing power to the detector. Length of time varies with design.

BC – RESTART PERIOD (Detector Power-Up Time) – Power to the detector is reapplied and time is allowed for detector to become operational for alarm. Time varies with detector design.

AC – RETARD-RESET-RESTART PERIOD – No alarm obtained from control unit. Maximum period of time is 60 seconds.

CD – CONFIRMATION PERIOD – Detector is operational for alarm at point C. If detector is still in alarm at point C, control unit will alarm. If detector is not in alarm, system returns to standby. If the detector realarms at any time during the confirmation period the control unit will alarm.

DE – OPTIONAL REGION – Either an alarm can occur at control unit or restart of the alarm verification cycle can occur.

AD – ALARM VERIFICATION PERIOD – Consists of the retard-reset-restart and confirmation periods.

Documents
Document Sharing Hub
Full document details: UL 985 2025

3.4 ANNUNCIATOR – An externally-connected electrically-operated visual indicating device containing two or more identified targets or indicator lamps in which each target or lamp indicates the circuit condition and/or location.

3.5 CIRCUITS, ELECTRICAL –

a) High-Voltage – A circuit involving a potential of not more than 600 volts and having circuit characteristics in excess of those of a low-voltage power-limited circuit.

b) Low-Voltage – A circuit involving a potential of not more than 30 volts AC rms, 42.4 volts DC or AC peak.

c) Power-Limited – A circuit wherein the power and current are limited as specified in Table 48.1 and Table 48.2.

3.6 CONTROL UNIT ACCESSORY – A device or appliance externally connected to a control unit which is used to ensure the intended operation of a system or to provide supplementary signaling and/or annunciation. Examples of control unit accessories are annunciators, end-of-line resistors or diodes, auxiliary relays, and remote switches.

3.7 DISTINCTIVE SIGNALS – Signals obtained from different sounding appliances, such as bells, horns, sirens, and buzzers, or from a single appliance, such as an electronic horn, where a continuous signal is obtained under one condition and a pulsing signal under another.

3.8 END-OF-LINE RESISTOR – A resistor installed at the end of an initiating or indicating device circuit to limit the amount of supervisory current.

3.9 FAULT – An open or ground condition on any line extending from a control unit.

3.10 INDICATING DEVICE – Any audible signal used to indicate a fire, supervisory, or trouble condition. Examples of audible signal appliances are bells, horns, sirens, electronic horns, buzzers, and chimes.

3.11 INDICATING DEVICE CIRCUIT – Circuit to which indicating devices are connected.

3.12 INITIATING DEVICE – A manually- or automatically-operated device whose operation results in a fire alarm indication from the control unit. Examples of alarm signal initiating devices are thermostats, manual boxes, and smoke detectors.

3.13 INITIATING DEVICE CIRCUIT – Circuit to which automatic or manual initiating devices are connected.

3.14 MESSAGE – Communicated data that contains specific information relating to the status of the product and is transmitted via a wired or wireless pathway from an origin to a destination.

3.15 TRAINED INSTALLER – An individual knowledgeable in the product operation and received instruction on installing the product.

3.16 TROUBLE SIGNAL – A visual or audible signal indicating a fault condition of any nature, such as an open or ground or other trouble condition, occurring in the device or connected wiring.

Documents
Document Sharing Hub
Full document details: UL 985 2025

4 Instructions and Drawings

4.1 A copy or draft of the operating and installation instructions and related schematic wiring diagrams and installation drawings intended to be furnished with each product are to be used as a basis for the examination and testing of the control unit.

4.2 The instructions and drawings shall include such directions and information as deemed by the organization responsible for the product to be adequate for attaining the intended and safe installation, maintenance, and operation of the control unit. See Installation Drawing, General, Section 79, and Instructions, General, Section 80.

4.3 In addition to the information given in 4.1 and 4.2, the manufacturer shall provide an evacuation plan as specified in 80.2.

5 Compatibility Information

5.1 General

5.1.1 Compatibility between a two-wire smoke detector that receives its power from the initiating device circuit of a fire alarm control unit is dependent upon the interaction between the circuit parameters, such as voltage, current, frequency, and impedance, of the detector and the initiating device circuit.

5.1.2 A detector that does not receive its power from the initiating device circuit of a control unit (conventionally a detector having four or more wires for field connection) may be used with any electrically compatible fire alarm system control unit without the need for compatibility consideration, as its connection does not impose any load on the initiating circuit. Under an alarm condition, the four-wire detector acts as a switch (similar to a manual station or heat detector) to place the system in alarm.

5.1.3 As a two-wire detector obtains its power from the initiating device circuit of a system control unit, its operation is dependent on the characteristics of the circuit to which it is connected, as the detector imposes a resistive and capacitive load on the circuit. Similarly, the load imposed upon the initiating device circuit by a connected detector shall not prevent alarm response by a control unit to a detector in alarm, nor prevent a trouble response to an open circuit after the last detector.

5.1.4 The connection of a two-wire smoke detector shall be restricted to the specific control units or initiating device circuits with which a compatibility evaluation has been made.

5.1.5 A supplementary signaling device [such as an audible appliance, relay, or annunciator lamp (LED-type)] that is integral with a two-wire smoke detector, and that is also powered from an initiating device circuit of a fire alarm system control unit, may be used if its operation, including level of audibility and light output, is not inhibited under the maximum normal standby and alarm loading conditions specified in the detector and control unit installation wiring diagrams.

5.2 Method of evaluation

5.2.1 In accordance with 5.1.1 – 5.1.5, to determine whether any combination of control unit and smoke detector or detectors is compatible, and whether the detectors are the same model or a mixture of one or more models or types, the tests indicated in (a) – (h) are to be conducted:

a) Operating voltage determination, as described in 43.1.1 – 43.1.3.

b) Alarm threshold impedance, as described in 43.2.1 – 43.2.3.

c) Maximum current limitation, as described in 43.3.1 and 43.3.2.

Documents
Document Sharing Hub
Full document details: UL 985 2025

d) Multiple detector alarm capacity, as described in 43.4.1.

e) Detectors with optional components, as described in 43.5.1 and 43.5.2.

f) Dynamic load immunity, as described in 43.6.1 and 43.6.2.

g) Electrical supervision, as described in 43.7.1 and 43.7.2.

h) Detector reset, as described in 43.9.1 and 43.9.2.

5.3 Changes affecting compatibility

5.3.1 If the compatibility integrity of a previously installed compatible combination may be affected by replacement detectors or a modification of either the detectors or the control unit, the product that is changed shall be assigned a different model number, or change in compatibility identification marking.

CONSTRUCTION

6 General

6.1 A control unit shall be intended and constructed for use with recognized signal initiating and indicating devices, and other equipment intended for connection to it to form a household fire alarm system of the type indicated by the installation wiring diagram.

6.2 Except where indicated otherwise, the construction requirements specified for control units shall apply also to control unit accessories.

6.3 Products that currently meet all the requirements of the Standard for Information Technology Equipment – Safety – Part 1: General Requirements, UL 60950-1, or the Standard for Audio, Video, and Similar Electronic Apparatus-Safety Requirements, UL 60065, need only be evaluated to the following construction requirements: 7.1.3, 7.1.4, 36.3, and Sections 10, 20, 21, 22, 23, 25, 26.1, 27, 28, and 32.

7 Frame and Enclosure

7.1 General

7.1.1 The frame and enclosure shall be sufficiently strong and rigid to resist total or partial collapse with attendant reduction of spacings, loosening or displacement of parts and development of other conditions which impairs its operation and increase the risk of fire, electric shock, or injury to persons.

7.1.2 All electrical parts of a control unit shall be enclosed to provide protection against contact with uninsulated live parts.

7.1.3 Space shall be provided within a terminal or wiring compartment for completing all wire connection as specified by the installation wiring diagram.

7.1.4 An enclosure shall have means for mounting, which shall be accessible without disassembling any operating part of the unit. Removal of a completely assembled panel or printed wiring board to mount the enclosure is not considered to be disassembly of an operating part.

7.1.5 A compartment enclosing electrical parts shall not be open to the floor or other support on which a unit rests.

Documents
Document Sharing Hub
Full document details: UL 985 2025

7.2 Cast metal enclosures

7.2.1 The thickness of cast metal for an enclosure shall be as indicated in Table 7.1.

Exception: Cast metal having a thickness 1/32 inch (0.8 mm) less than that indicated in the table, if the surface under consideration is curved, ribbed, or otherwise reinforced, or if the shape or size, or both, of the surface is such that equivalent mechanical strength is provided, complies with this requirement.

Table 7.1
Cast metal electrical enclosures

Use, or dimensions of area involved	Minimum thickness			
	Die-cast metal		Cast metal of other than the die-cast type	
	inch	(mm)	inch	(mm)
Area of 24 square inches (155 cm^2) or less and not having a dimension greater than 6 inches (152 mm)	1/16	(1.6)	1/8	(3.2)
Area greater than 24 square inches (155 cm^2) or having any dimension greater than 6 inches (152 mm)	3/32	(2.4)	1/8	(3.2)
At a threaded conduit hole	1/4	(6.4)	1/4	(6.4)
At an unthreaded conduit hole	1/8	(3.2)	1/8	(3.2)

7.2.2 If threads for the connection of conduit are tapped all the way through a hole in an enclosure wall, or if an equivalent construction is used, there shall not be fewer than 3-1/2 nor more than five threads in the metal, and the construction shall be such that a standard conduit bushing is capable of being attached.

7.2.3 If threads for the connection of conduit are tapped only part of the way through a hole in an enclosure wall, there shall not be fewer than five full threads in the metal, and there shall be a smooth, well-rounded inlet hole for the conductors which shall afford protection to the conductors equivalent to that provided by a standard conduit bushing.

7.3 Sheet metal enclosures

7.3.1 The thickness of sheet metal used for the enclosure of a control unit shall not be less than that indicated in Table 7.2.

Exception: Sheet metal two gage sizes smaller, if the surface under consideration is curved, ribbed, or otherwise reinforced, or if the shape or size, or both, of the surface is such that equivalent mechanical strength is provided, complies with this requirement.

Documents
Document Sharing Hub
Full document details: UL 985 2025

Table 7.2
Sheet metal electrical enclosures

Maximum enclosure dimensions				Minimum thickness of sheet metal					
				Steel				Brass or aluminum	
				Zinc coated		Uncoated			
Any linear dimension		Area of any surface		inch	(mm)	inch	(mm)	inch	(mm)
inches	(mm)	inches^2	(cm^2)	[GSG]	[MSG]	[AWG]			
12	(305)	90	(584)	0.035 [20]	(0.86)	0.032 [20]	(0.81)	0.045 [16]	(1.14)
24	(610)	360	(2322)	0.045 [18]	(1.14)	0.042 [18]	(1.07)	0.058 [14]	(1.47)
48	(1219)	1200	(7742)	0.056 [16]	(1.42)	0.053 [16]	(1.35)	0.075 [12]	(1.91)
60	(1524)	1500	(9678)	0.070 [14]	(1.78)	0.067 [14]	(1.70)	0.095 [10]	(2.41)
Over 60	(Over 1524)	Over 1500	(Over 9678)	0.097 [12]	(2.46)	0.093 [12]	(2.36)	0.122 [8]	(3.10)

7.3.2 At any point where conduit or metal-clad cable is to be attached, sheet metal shall be of such thickness or shall be formed or reinforced so that it will have stiffness at least equivalent to that of uncoated flat sheet steel having a minimum thickness of 0.053 inch (1.35 mm).

7.3.3 A plate or plug for an unused conduit opening or other hole in the enclosure shall have a minimum thickness of:

a) 0.014 inch (0.36 mm) for steel or 0.019 inch (0.48 mm) for nonferrous metal for a hole having a 1/4-inch (6.4-mm) maximum dimension.

b) 0.027 inch (0.69 mm) for steel or 0.032 inch (0.81 mm) for nonferrous metal for a hole having a 1-3/8-inch (34.9-mm) maximum dimension.

7.3.4 A closure for a larger hole shall have a thickness equal to that required for the enclosure of the device, or a standard knockout seal shall be used. Such plates or plugs shall be mechanically secure as mounted.

7.3.5 A knockout in a sheet-metal enclosure shall be secured but shall be capable of being removed without deformation of the enclosure.

7.3.6 A knockout shall be provided with a flat surrounding surface adequate for proper seating of a conduit bushing, and shall be located so that installation of a bushing at any knockout likely to be used during installation will not result in spacings between uninsulated live parts and the bushing of less than the requirements in this standard.

7.4 Nonmetallic enclosures

7.4.1 A nonmetallic enclosure or enclosure part shall have mechanical strength and durability at least equivalent to a sheet-metal enclosure of the minimum thickness specified in Table 7.2. The enclosure or enclosure part shall protect persons from the risk of electric shock.

Documents
Document Sharing Hub
Full document details: UL 985 2025

7.4.2 Among the factors taken into consideration when determining the acceptability of a nonmetallic enclosure are:

a) Mechanical strength;

b) Resistance to impact;

c) Moisture-absorptive properties;

d) Combustibility and resistance to ignition from electrical sources;

e) Dielectric strength, insulation resistance, and resistance to arc tracking; and

f) Resistance to distortion and creeping at temperatures to which the material is subjected under conditions of intended or abnormal usage. All these factors are considered with respect to aging.

7.4.3 The continuity of the grounding system shall not rely on the dimensional integrity of the nonmetallic material.

8 Electric Shock

8.1 Any part that is exposed only during operator servicing shall not present the risk of electric shock. See Electric Shock Current Test, Section 57.

8.2 Each terminal provided for the connection of an external antenna shall be conductively connected to the supply circuit grounded conductor. The conductive connection shall have a maximum resistance of 5.2 megohms, a minimum wattage rating of 1/2 watt, and shall be effective with the power switch in either the on or off position.

Exception: The conductive connection need not be provided if:

a) Such a connection is established in the event of electrical breakdown of the antenna isolating means;

b) The breakdown does not result in a risk of electric shock; and

c) In a construction using an isolating power transformer, the resistance of the conductive connection between the supply circuit and chassis does not exceed 5.2 megohms.

8.3 The maximum value of 5.2 megohms mentioned in 8.2 is to include the maximum tolerance of the resistor value used; that is, a resistor rated 4.2 megohms with 20 percent tolerance or a resistor rated 4.7 megohms with a 10 percent tolerance may be used. When component comprised of a capacitor with a built-in shunt resistor that complies with the requirements for antenna isolating capacitors, it shall be rated a minimum of 1/4 watt.

8.4 The insertion in any socket of any vacuum tube or its glass or metal equivalent of like designation used in the product shall not result in a risk of electric shock.

9 Enclosure Openings

9.1 General

9.1.1 An enclosure intended for recessed mounting and whose front panel is to be flush with the surface of the wall shall have no openings that vent into concealed spaces of a building structure, such as into hollow spaces in the wall, when the product is mounted as intended.

AVA Documents
Document Sharing Hub
Full document details: UL 985 2025

Exception: Products supplied solely from power-limited sources and controlling only power-limited loads.

9.1.2 The requirement in 9.1.1 does not apply to an opening for a mounting screw or nail or for a manufacturing operation.

9.2 Enclosure top openings

9.2.1 An opening directly over an uninsulated live part involving a risk of fire, electric shock, or electrical-energy/high-current levels, shall not exceed 0.20 inch (5.0 mm) in any dimension unless the configuration is such that a vertically falling object cannot fall into the unit and contact an uninsulated live part. See Figure 9.1 for examples of top-cover designs complying with the intent of the requirement.

Figure 9.1

Cross-sections of top-cover designs

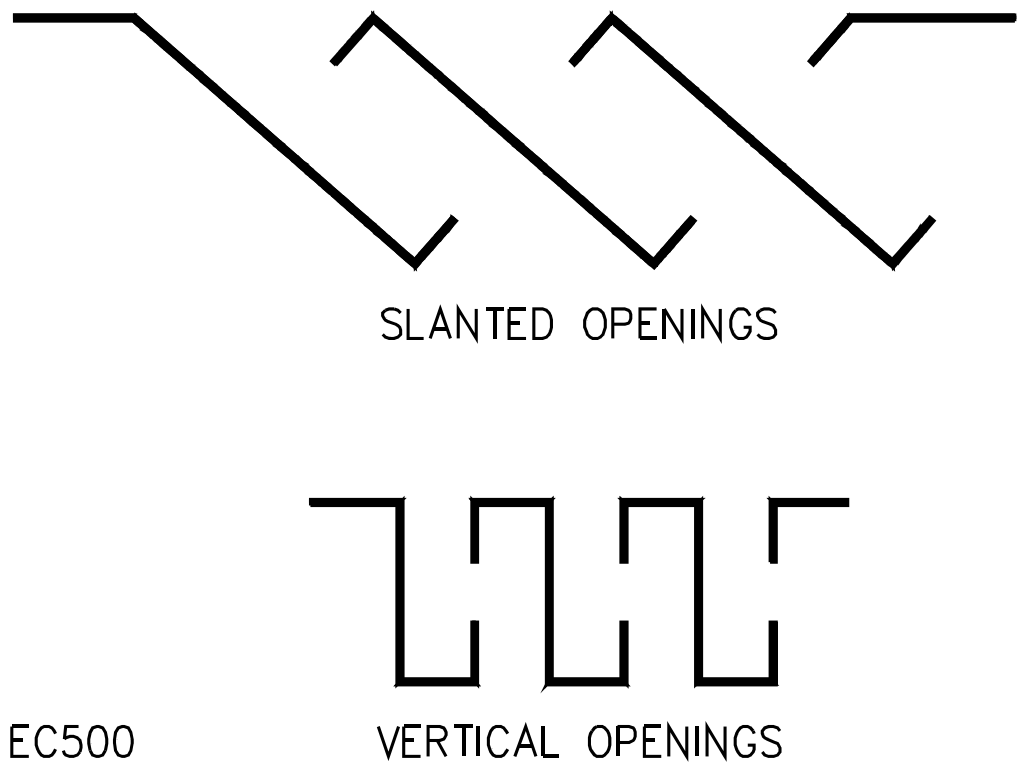

9.3 Enclosure side openings

9.3.1 An opening in the side of the enclosure other than a side for product mounting shall:

a) Not exceed 0.19 inch (4.8 mm) in any dimension;

b) Be provided with louvers shaped to deflect an external falling object outward (see Figure 9.1 for examples of louver designs complying with the requirement); or

c) Be located and sized so that objects which are present cannot drop into the unit and fall (with no horizontal velocity) onto uninsulated live parts involving a risk of fire, electric shock, or electrical-energy/high-current levels, or parts involving injury to persons (see Figure 9.3).

Documents
Document Sharing Hub
Full document details: UL 985 2025

Figure 9.2

Louvers

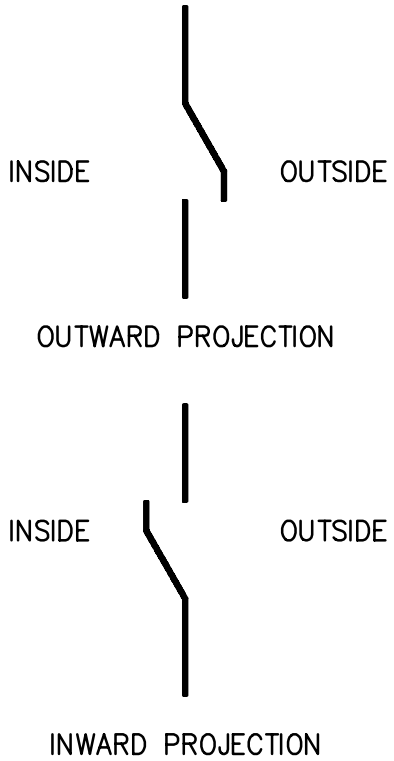

Documents
Document Sharing Hub
Full document details: UL 985 2025

Figure 9.3

Example of enclosure side opening

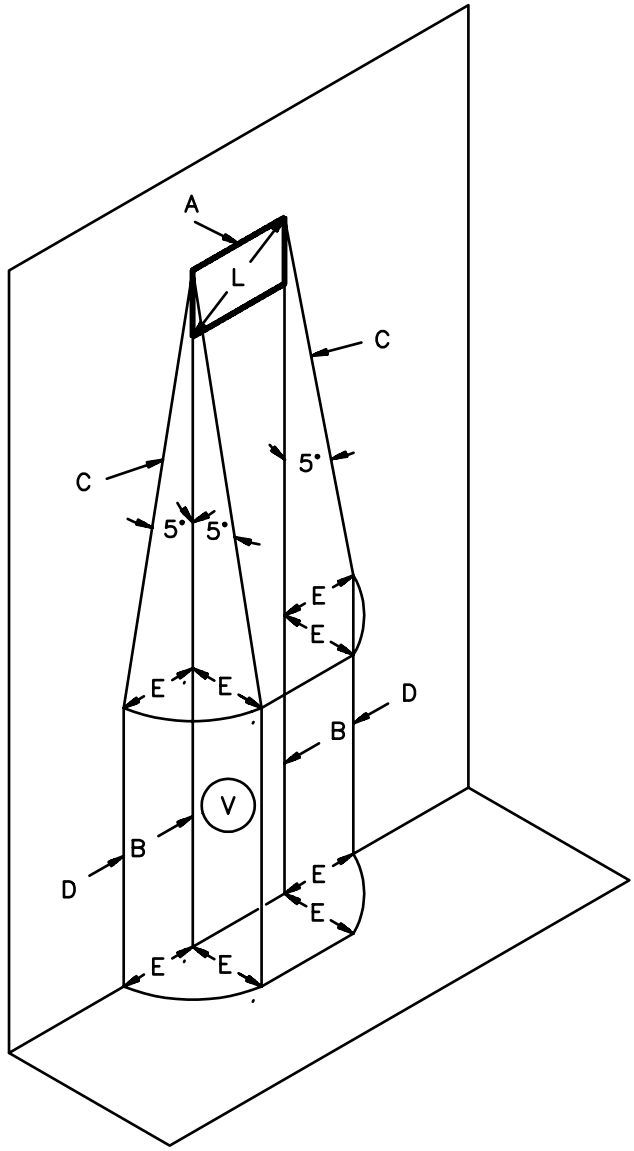

S3162A

A – Enclosure side opening.

B – Vertical projection of the outer edges of the side opening.

C – Inclined lines that project at a 5-degree angle from the edges of the side opening to point located E distance from B.

D – Line which is projected straight downward in the same plane as the enclosure side wall.

E – Projection of the opening (not to be greater than L).

L – Maximum dimension of the enclosure side opening.

V – Volume in which bare parts at uninsulated live parts are not located.

Documents
Document Sharing Hub
Full document details: UL 985 2025

9.3.2 When a portion of a side panel falls within the area traced out by the 5-degree angle in Figure 9.4, that portion of the side panel shall be investigated as a bottom enclosure in accordance with 9.4.1 – 9.4.3.

Figure 9.4

Enclosure bottom

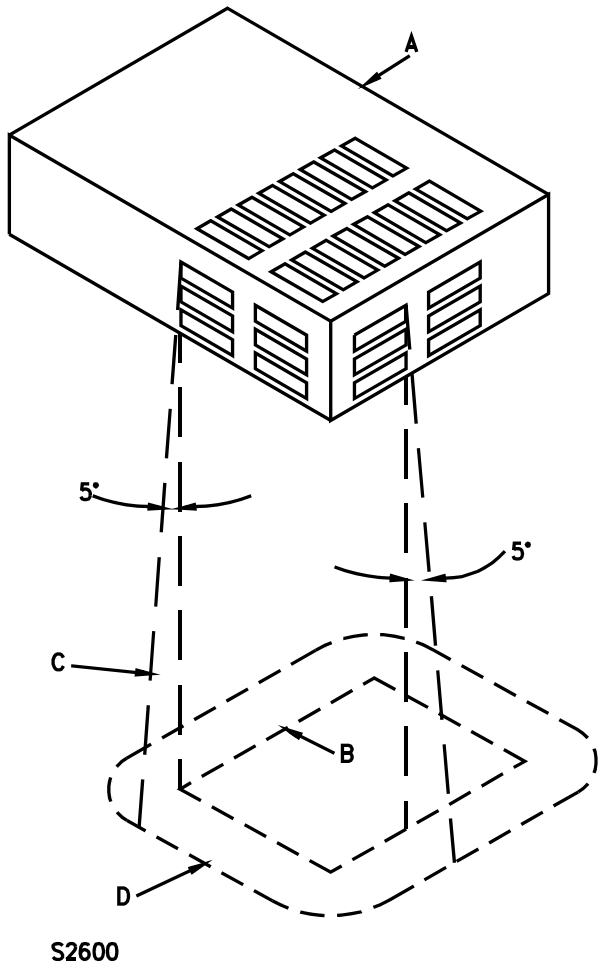

A – The entire component under which an enclosure (flat or dished with or without a lip or other raised edge) of noncombustible material is to be provided. The sketch is of an enclosed component with ventilation openings showing that the enclosure is required only for those openings through which flaming parts are to be emitted. When the component or assembly does not have its own noncombustible enclosure, the area to be protected is the entire area occupied by the component or assembly.

B – Projection of the outline of the area of A that requires a bottom enclosure vertically downward onto the horizontal plane of the lowest point on the outer edge D of the enclosure.

C – Inclined line that traces out an area D on the horizontal plane of the enclosure. Moving around the perimeter of the area B that requires a bottom enclosure, this line projects at a 5 degree angle from the line extending vertically at every point around the perimeter of A and is oriented to trace out the largest area; except that the angle shall be less than 5 degrees when the enclosure bottom contacts a vertical enclosure or side panel, or when the horizontal extension of the enclosure B to D exceeds 6 inches (152 mm).

D – Minimum outline of the enclosure, except that the extension B to D is not required to exceed 6 inches (152 mm), flat or dished with or without a tip or other raised edge. The bottom shall either be flat or formed in any manner when every point of area D is at or below the lowest point on the outer edge of the enclosure.

Documents
Document Sharing Hub
Full document details: UL 985 2025

9.4 Enclosure bottom openings

9.4.1 The bottom of an enclosure shall consist of a complete or partial bottom enclosure under a component, groups of components, or assemblies, as shown in Figure 9.4, that complies with the ventilation opening requirements in 9.2 and 9.3 unless a test demonstrates that the bottom enclosure provided contains flames, glowing particles or similar burning debris when all combustible material in the interior is ignited.

Exception: Openings without limitation on their size and number are permitted in areas that contain only wires, cables, plugs, receptacles, and impedance- and thermally-protected motors.

9.4.2 Ventilation openings provided in the bottom of an enclosure under materials that are not rated V-1 or less flammable meet the intent of the requirements when the openings are constructed so that materials do not fall directly from the interior of the unit. Other bottom-opening constructions that comply with the intent of the requirements are those that incorporate a perforated metal plate as described in Table 9.1, or a galvanized or stainless-steel screen having a 14 by 14 mesh per 1 inch (25.4 mm) constructed of wire with a minimum diameter of 1/64 inch (0.4 mm). Other constructions are to be used only when they comply with the Ignition Test Through Bottom-Panel Openings, 75.

Table 9.1
Perforated metal plates

Minimum thickness		Maximum diameter of holes		Minimum spacing of holes center-to-center	
inch	(mm)	inch	(mm)	inch	(mm)
0.026	(0.66)	0.045	(1.14)	0.67	(1.70)
	–	–	–	[233 holes per inch^2]	[36 holes per cm^2]
0.026	(0.66)	0.047	(1.19)	0.093	(2.36)
0.032	(0.81)	0.075	(1.91)	0.125	(3.18)
	–	–	–	[72 holes per inch^2]	[11 holes per cm^2]
0.036	(0.91)	0.063	(1.60)	0.109	(2.77)
0.036	(0.91)	0.078	(1.98)	0.125	(3.18)

9.4.3 The bottom of the enclosure under areas containing only materials rated V-1 or less flammable shall have openings no larger than 1/16 inch^2 (40 mm^2).

10 Metal Covers and Doors

10.1 An enclosure cover shall be hinged, sliding, pivoted, or similarly attached if:

a) It provides access to fuses or any other overcurrent-protective device the functioning of which requires renewal, or

b) It is necessary to open the cover in connection with the normal operation and maintenance of the unit.

10.2 With reference to 10.1, normal operation is considered to be operation of a switch for testing or for silencing an audible signal appliance or operation of any other component of a unit that requires such action in connection with its intended performance.

10.3 A hinged cover is not required where the only fuse(s) enclosed is intended to provide protection to portions of internal circuits such as used on a separate printed wiring board or circuit subassembly to prevent excessive circuit damage resulting from a fault. Such a fuse(s) may be used if the following or

AVA Documents Document Sharing Hub

Full document details: UL 985 2025

equivalent marking is indicated on the cover: "CIRCUIT FUSE(S) INSIDE – Disconnect Power Prior To Servicing."

10.4 A hinged cover shall be provided with a latch, screw, or catch to hold it closed. An unhinged cover shall be held in place by screws or the equivalent.

11 Glass Panels

11.1 Glass covering an observation opening shall be secured in place and shall provide mechanical protection for the enclosed parts. The thickness of a glass cover shall not be less than that indicated in Table 11.1.

Table 11.1
Thickness of glass covers

Maximum size of opening				Minimum thickness	
Length or width		Area			
inches	(mm)	inches^2	(cm^2)	inch	(mm)
4	(102)	16	(103)	1/16	(1.6)
12	(305)	144	(929)	1/8	(3.2)
Over 12	(Over 305)	Over 144	(Over 929)	a	a

[a] 1/8 inch or more, depending upon the size, shape, and mounting of the glass panel.

11.2 A glass panel for an opening having an area of more than 144 square inches (930 cm^2), or having any dimension greater than 12 inches (305 mm), shall be supported by a continuous groove not less than 3/16 inch (4.8 mm) deep along all four edges of the panel.

11.3 A transparent material other than glass used as a cover over an opening in an enclosure shall have equivalent mechanical strength to that of glass, and shall not create a risk of fire, distort, nor become less transparent at the temperature to which it is subjected under intended or abnormal service conditions.

12 Corrosion Protection

12.1 Except as indicated in 12.2, iron and steel parts, except bearings and the like where such protection cannot be provided, shall be protected against corrosion by enameling, galvanizing, sherardizing, plating, or other equivalent means.

12.2 The requirement of 12.1 applies to all enclosing cases whether of sheet steel or cast iron, and to all springs and other parts upon which mechanical operation depends. Parts made of stainless steel, polished or treated if necessary, do not require additional protection against corrosion. Bearing surfaces shall be of such materials and construction as to resist binding due to corrosion.

13 Insulating Material

13.1 Insulating materials for the support or separation of live parts shall be of a nonflammable, moisture-resistant insulating material, such as porcelain, phenolic or cold-molded composition, or other material which is recognized for the support of live parts.

13.2 A base mounted on a metal surface shall be provided with an insulating barrier between the mounting surface and all live parts on the underside of the base which are not staked, upset, sealed, or

AVA Documents
Document Sharing Hub
Full document details: UL 985 2025

equivalently prevented from loosening so as to prevent such parts and the ends of replaceable terminal screws from coming in contact with the supporting surface.

13.3 Vulcanized fiber or other material providing equivalent insulative properties shall be used for insulating bushings, washers, separators, and barriers, but not for the sole support of live parts.

13.4 The thickness of a flat sheet of insulating material, such as phenolic composition used for panel-mounting of parts, shall not be less than that indicated in Table 13.1.

Table 13.1
Thickness of flat sheets of insulating material

Maximum dimensions				Minimum thickness	
Length or width		Area			
inches	(mm)	inches^2	(cm^2)	inch	(mm)
24	(610)	360	(2323)	3/8[a]	(9.5)
48	(1219)	1152	(7432)	1/2	(12.7)
48	(1219)	1728	(11148)	5/8	(15.9)
Over 48	(Over 1219)	Over 1728	(Over 11148)	3/4	(19.1)

[a] When material that is less than 3/8 inch but not less than 1/8 inch (3.2 mm) thick is used for a panel, the panel shall be supported or reinforced to provide rigidity not less than that of a 3/8-inch sheet. Material less than 1/8 inch thick shall only be used for subassemblies, such as supports for terminals for internal wiring, resistors, and other components.

13.5 A terminal block mounted on a metal surface which may be grounded shall be provided with an insulating barrier between the mounting surface and all live parts on the underside of the base which are not staked, upset, sealed, or equivalently prevented from loosening so as to prevent such parts and the ends of replaceable terminal screws from coming in contact with the supporting surface.

13.6 A countersunk, sealed part shall be covered with a waterproof insulating compound which will not melt at a temperature 15°C (27°F) higher than the maximum normal operating temperature of the assembly, and at not less than 65°C (149°F) in any case. The depth or thickness of sealing compound shall not be less than 1/8 inch (3.2 mm).

14 Mounting of Electrical Components

14.1 All parts of a household control unit shall be secured to their supporting surfaces so that they will be prevented from loosening or turning if such motion adversely affects the intended performance of the control unit, or increases the risk of fire or injury to persons resulting from operation of the control unit.

14.2 A switch, lampholder, attachment-plug receptacle, or plug connector shall be mounted as intended and, except as noted in 14.3 and 14.4, shall be prevented from turning.

14.3 The requirement that a switch be prevented from turning is waived if all the following conditions are met:

a) The switch is of a push button or other type that does not tend to rotate when operated. A toggle switch is considered to be subject to forces that tend to turn the switch during operation of the switch.

b) The means of mounting the switch is not subject to loosening as the result of its operation.

c) The spacings are not reduced below the minimum required values if the switch does rotate.

AVA Documents
Document Sharing Hub
Full document details: UL 985 2025

14.4 A lampholder of a type in which the lamp cannot be replaced, such as a neon pilot or indicator light in which the lamp is sealed in by a nonremovable jewel, need not be prevented from turning if rotation cannot reduce spacings below the minimum required values.

14.5 The means for preventing turning of a device shall consist of more than friction between surfaces; for example, a lock washer, properly applied, may be used as the means for preventing a small stem-mounted switch or other device having a single-hole mounting means from turning.

14.6 Uninsulated live parts, including terminals, shall be secured to their supporting surfaces by methods other than friction between surfaces, so that they will be prevented from turning or shifting in position if such motion results in reduction of spacings to less than those required. The security of contact assemblies shall be such as to ensure the continued alignment of contacts.

15 Operating Mechanisms

15.1 Operating parts, such as switches, relays, and similar devices, shall be protected by individual protection and/or dust-tight cabinets, against fouling by dust or by other material which adversely affects their intended operation.

15.2 A part shall be constructed of material that is required for its intended application.

15.3 The assembly of an operating mechanism included as a part of a control unit shall be such that it will not be affected adversely by any condition of its intended operation.

15.4 Moving parts shall have sufficient play at bearing surfaces to prevent binding.

15.5 Provision shall be made to prevent adjusting screws and similar adjustable parts from loosening under the conditions of actual use.

15.6 Manually-operated parts shall have the necessary strength to withstand the stresses to which they will be subjected in operation.

15.7 An electromagnetic device shall provide reliable and positive electrical and mechanical performance as evidenced by compliance with the Performance requirements in this standard.

16 Current-Carrying Parts

16.1 A current-carrying part shall have the necessary mechanical strength and current-carrying capacity for the service, and shall be of a metal, such as silver, copper or a copper alloy, or other material which will provide equivalent performance.

16.2 Bearings, hinges, and the like shall not be used for carrying current between interrelated fixed and moving parts.

17 Grounding for Products Containing High-Voltage Circuits

17.1 A product which involves high-voltage circuits shall have provision for the grounding of all exposed dead metal parts that might become energized from circuits involving a risk of electric shock.

Exception: Metal parts as described in (a) – (d):

Documents
Document Sharing Hub
Full document details: UL 985 2025

a) Adhesive-attached metal-foil markings, screws, handles, etc., which are located on the outside of the enclosure and isolated from electrical components or wiring by grounded metal parts so that they are not liable to become energized.

b) Isolated metal parts, such as small assembly screws, etc., which are positively separated from wiring and uninsulated live parts.

c) Panels and covers that do not enclose uninsulated live parts when wiring is positively separated from the panel or cover so that it is not liable to become energized.

d) Panels and covers which are insulated from electrical components and wiring by an insulating barrier of vulcanized fiber, varnished cloth, phenolic composition, or similar material that is a minimum of 0.8 mm (1/32 inch) thick.

17.2 On fixed equipment, the provision of a knockout or other opening in a metal enclosure for the connection of metal-clad cable, conduit, metal raceway, or the like is permitted as a means for grounding.

17.3 When a product is provided with means for separate connection to more than one power supply, each such connection shall be provided with a means for grounding.

17.4 All dead-metal parts that are accessible during intended use or user servicing, and that are capable of becoming energized from circuits involving a risk of electric shock, shall be connected together and to the grounding means.

Exception: Metal parts as described in the Exception to 17.1.

17.5 The following circuits of fire alarm system circuits shall be bonded to ground under the indicated conditions:

a) Alternating current circuits less than 50 volts:

1) Where supplied by transformers if the transformer supply system exceeds 150 volts to ground.

2) Where supplied by transformers if the transformer supply system is ungrounded.

3) Where installed as overhead conductors outside of buildings.

b) Alternating current circuits of 50 volts and over:

1) Where the system can be so grounded that the maximum voltage to ground on the ungrounded conductors does not exceed 150 volts.

2) Where the system is nominally rated 240/120 volts, 3-phase, 4-wire in which the midpoint of one phase is used as a circuit conductor.

c) Direct-current circuits operating at 51 – 300 volts.

17.6 All bonding to ground connections shall be by a positive means, such as by clamping, riveting, brazing, welding, or by being a bolted or screwed connection. The bonding connection shall penetrate nonconductive coatings such as paint. Bonding around a resilient mount shall not rely on the clamping action of rubber or similar material.

17.7 A bolted or screwed connection that incorporates a star washer or serrations under the screw head for penetrating nonconductive coatings is identified as complying with 17.6.

Documents
Document Sharing Hub

Full document details: UL 985 2025

17.8 Where the bonding means depends upon screw threads, the use of two or more screws or two full threads of a single screw engaging metal is in compliance with 17.6.

17.9 A field-wiring terminal intended solely for connection of an equipment-grounding conductor shall be capable of securing a conductor of the size specified in Table 17.1.

Table 17.1
Bonding wire conductor size

Rating of overcurrent device, amperes	Size of bonding conductor[a]			
	Copper wire		Aluminum wire	
	AWG	(mm^2)	AWG	(mm^2)
15	14	(2.1)	12	(3.3)
20	12	(3.3)	10	(5.3)
30	10	(5.3)	8	(8.4)
40	10	(5.3)	8	(8.4)
60	10	(5.3)	8	(8.4)
100	8	(8.4)	6	(13.3)
200	6	(13.3)	4	(21.2)

[a] Or equivalent cross-sectional area.

17.10 The size of a copper or aluminum conductor used to bond an electrical enclosure shall be based on the rating of the branch-circuit overcurrent device by which the equipment will be protected. The size of the conductor shall be in accordance with Table 17.1.

17.11 Splices shall not be used in wire conductors used for bonding.

17.12 A wire-binding screw or a pressure wire connector intended for the connection of an equipment-grounding conductor shall have a green-colored head or shall be plainly identified as such by being marked "G," "GR," "GND," "Ground," "Grounding," or the like, or with the Symbol 5019 graphic from IEC Publication 60417-1 shown in Figure 17.1, or by a marking on the wiring diagram provided on the product. The wire-binding screw or pressure wire connector shall be located so that it is not able to be removed during intended servicing of the product. When used alone, the Symbol 5019 graphic from IEC Publication 60417-1 shall be defined in the installation instructions provided with the equipment.

Documents
Document Sharing Hub
Full document details: UL 985 2025

Figure 17.1

International electrical symbol

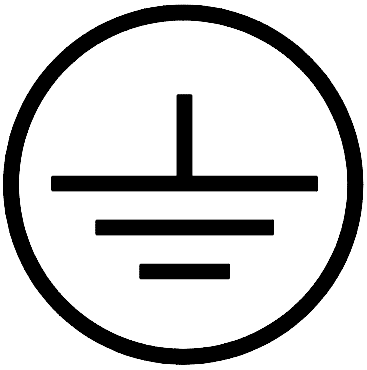

IEC417, Symbol 5019

17.13 The surface of an insulated lead intended solely for the connection of an equipment-grounding conductor shall be green with or without one or more yellow stripes, and no other lead shall be so identified.

17.14 The grounding conductor in a flexible cord shall be green with or without one or more yellow stripes. The grounding conductor shall be secured to the frame or enclosure of the product by means of a screw, rivet, or similar equipment that is not removable during intended servicing not involving the supply cord. Solder shall not be used alone for securing the grounding conductor. The grounding conductor shall be connected to the grounding terminal of an attachment plug.

17.15 When a means for grounding is provided on the product, even though it is not required, it shall comply with the requirements in 17.1 – 17.14.

17.16 Metal-to-metal hinge-bearing members for doors or covers are considered to meet the requirement for bonding the door or cover to ground, when a multiple bearing pin type (piano-type hinge) is used.

Exception: Slip-joint or similar, hinge-bearing members are not required to comply with this requirement when the resistance between the two parts connected by the bonding element is not more than 0.1 ohm. The resistance shall be determined by a resistance-measuring instrument. When unacceptable results are recorded, an alternating or direct current of at least 20 amperes from a power supply of not more than 12 volts shall be passed between the two parts connected by the bonding element. The resulting drop in potential and the test current shall be measured between the two points. The resistance in ohms shall be determined by dividing the drop in potential in volts by the current in amperes.

18 Servicing Protection

18.1 Uninsulated live parts or hazardous moving parts shall be located, guarded, or enclosed so as to prevent contact by persons during servicing such as relamping, changing fuses, adjusting controls, battery replacement and maintenance, and operating switches. Protection from contact may be provided by insulating tape, barriers, or the equivalent, over exposed current-carrying parts operating in excess of 30 volts AC rms (42.4 volts peak or direct current).

Documents
Document Sharing Hub
Full document details: UL 985 2025

FIELD-WIRING CONNECTIONS

19 Power Connections

19.1 Household fire warning systems shall have two independent power sources consisting of a primary source that uses commercial light and power and a secondary source that consists of a rechargeable battery.

19.2 A primary battery is not prohibited from being used as the sole source of power for a low-power wireless transmitter when the conditions of 64.8 are met.

20 Primary Power Supply

20.1 A household fire alarm control unit shall have provision for connection to a commercial light and power source normally available in a home. This shall be in the form of a permanent connection by means of wiring terminals or leads in a separate wiring compartment having provision for the connection of conduit or metal-clad cable, or by means of a power-supply cord and attachment plug.

20.2 Control units intended to be installed by other than a qualified electrician shall be powered from a power-limited power supply.

20.3 The primary power supply shall be of sufficient capacity to operate the system under all conditions of loading with any standby rechargeable battery fully discharged (85 percent of its marked nominal rating).

21 Secondary Power Supply

21.1 The secondary power supply shall be of sufficient capacity to supply the maximum power to the system for 24 hours in the intended standby condition and thereafter be able to operate the control unit for fire alarm signals for at least 4 minutes continuously.

22 Batteries

22.1 For a rechargeable type battery, the maximum charging current, as well as the maximum trickle charging current available, shall not exceed the battery manufacturer's specifications.

22.2 Provision shall be made for an automatic test of the standby battery at least once every 4 hours. The test shall be conducted under a load sufficient to determine if the battery requires service, has been removed, or is disconnected. A battery requiring service is defined as a battery which is not capable of providing 4 minutes of alarm signaling during a power failure. If the automatic battery test determines that the battery requires service or is disconnected, an audible trouble signal shall be provided.

22.3 In all cases the marking on the unit shall also include battery replacement instructions for a primary battery.

22.4 Batteries included as part of a control unit shall be located and mounted so that terminals of cells will not come in contact with uninsulated live parts of the control unit, with terminals of adjacent cells, or with metal parts of the enclosure as a result of shifting.

22.5 A battery compartment intended for use with rechargeable batteries that emit gases during charging shall be provided with vent holes.

Documents
Document Sharing Hub
Full document details: UL 985 2025