UL 1384

Outline of Investigation for Water-Based Automatic Extinguisher Units

ISSUE NO: 3

June 11, 2015

Summary of Topics

The Third Issue of this Outline of Investigation revises labeling requirements to point the user to the applicable governing regulations.

COPYRIGHT © 2015 UNDERWRITERS LABORATORIES INC.

UL COPYRIGHTED MATERIAL –
NOT AUTHORIZED FOR FURTHER REPRODUCTION OR
DISTRIBUTION WITHOUT PERMISSION FROM UL

Documents
Document Sharing Hub

Copyright UL
Provided by IHS under license with UL
No reproduction or networking permitted without license from IHS
Licensee=North Carolina State Univ/5618801100
Not for Resale, 10/17/2015 13:39:28 MDT
Full document details: UL SUBJECT 1384 2015

No Text on This Page

UL COPYRIGHTED MATERIAL –
NOT AUTHORIZED FOR FURTHER REPRODUCTION OR
DISTRIBUTION WITHOUT PERMISSION FROM UL

Documents
Document Sharing Hub

Copyright UL
Provided by IHS under license with UL
No reproduction or networking permitted without license from IHS
Full document details: UL SUBJECT 1384 2015

Licensee=North Carolina State Univ/5618801100
Not for Resale, 10/17/2015 13:39:28 MDT

CONTENTS

INTRODUCTION

1 Scope 5
2 Components 5
3 Units of Measurement 5
4 Undated References 6
5 Glossary 6

CONSTRUCTION

6 General 7
7 Controls and Indicators 8
8 Caps, Valves, and Closures 9
9 Pressure Vessels and Cylinders 9
10 Pressure Relief Devices for Pressure Vessels and Cylinders 13
11 Gaskets and ″O″ Rings 13
12 Pressure Gauges for Pressure Vessels and Cylinders 13
13 Puncturing Mechanisms 14
14 Siphon Tubes 14
15 Extinguishing Agent 15
16 Expellant Gases 15
17 Polymeric Materials and Nonmetallic Parts 15
18 Anti-Recoil Devices 16
19 Gas Cartridges 16
20 Pressure Switches 16
21 Flexible Hose Assemblies Used for Distribution of Agent 17
22 Nozzles 17
23 Protective Covers 17
24 Strainer and Filter 17

PERFORMANCE

25 General 18
26 Fire Test – Total Flooding Protection 18
26.1 General 18
26.2 Class A fire tests 19
26.3 Class B fire tests 20
26.4 Automatic operation extinguishment tests 22
27 Locking Indicator Test 24
28 Nozzle Water Flow Test 24
29 Nozzle Function Test 25
30 Nozzle Specific Corrosion Tests 25
30.1 Sulfur dioxide/carbon dioxide corrosion 25
30.2 Hydrogen sulfide corrosion 26
30.3 Salt spray corrosion 26
31 Agent Exposure Test 27
32 Flow Distribution Tests 27
33 Hydrostatic Pressure Test 28
33.1 Pressure vessels and gas cartridges 28
33.2 Other devices subject to pressure 29

UL COPYRIGHTED MATERIAL –
NOT AUTHORIZED FOR FURTHER REPRODUCTION OR
DISTRIBUTION WITHOUT PERMISSION FROM UL
Documents
Document Sharing Hub

Copyright UL
Provided by IHS under license with UL
No reproduction or networking permitted without license from IHS
Full document details: UL SUBJECT 1384 2015
Licensee=North Carolina State Univ/5618801100
Not for Resale, 10/17/2015 13:39:28 MDT

33.3 Test method 30
34 30-Day Elevated Temperature Test 30
35 Temperature Cycling Test 30
36 Salt Spray Corrosion Test 31
37 500 Cycle Operation Test 31
38 One-Year Time Leakage Test 32
39 Mounting Device Test 32
40 Flexible Hose Assembly Low Temperature Test 33
41 Flexible Hose Assembly Cycling Test 33
42 Flexible Hose Assembly Fire Exposure Test 33
43 Pneumatic Operation Test 34
44 Pressure Relief Tests 34
45 Elastomeric Parts Test 35
46 10-Day Moist Ammonia Air Stress Cracking Test 35
47 Aging Tests - Plastic Materials 36
47.1 Air-oven aging test 36
47.2 Exposure to extinguishing agent test 38
47.3 Light and water test 38
48 Calibration Test - Gauges and Indicators 39
49 Burst Strength Test - Gauges and Indicators 39
50 Overpressure Test - Gauges 40
51 Impulse Test - Gauges 40
52 Pressure Gauge Relief Test 40
53 Water Resistance Test - Gauges and Indicators 41
54 Nameplate Exposure Tests 41
55 Nameplate Adhesion Test 41
56 Nameplate Abrasion Test 42

MANUFACTURING AND PRODUCTION TESTS

57 General 42
57.1 Manufacturer's Tests 42
57.2 Hydrostatic pressure test- shells 42
57.3 Non-DOT gas cartridges 43
57.4 Gauge calibration test 43
57.5 Leakage test 43

PACKING FOR SHIPMENT

58 General 44

MARKINGS

59 General 44

INSTALLATION INSTRUCTIONS

60 Installation, Operation, and Maintenance Instruction Manual 46
61 Owner's Manual 47

UL COPYRIGHTED MATERIAL –
NOT AUTHORIZED FOR FURTHER REPRODUCTION OR
DISTRIBUTION WITHOUT PERMISSION FROM UL
Documents
Document Sharing Hub
Copyright UL
Provided by IHS under license with UL
No reproduction or networking permitted without license from IHS
Licensee=North Carolina State Univ/5618801100
Not for Resale, 10/17/2015 13:39:28 MDT
Full document details: UL SUBJECT 1384 2015

INTRODUCTION

1 Scope

1.1 These requirements cover the construction and operation of water-based automatic extinguisher units intended for total flooding applications when installed, inspected, tested, and maintained in accordance with the manufacturer's instructions.

1.2 Automatic extinguisher units do not have a manual means of operation, and are not intended for protection of fire risks larger than those specified in the manufacturer's instructions for a single unit by using multiple units.

2 Components

2.1 Except as indicated in 2.2, a component of a product covered by this outline shall comply with the requirements for that component.

2.2 A component is not required to comply with a specific requirement that:

a) Involves a feature or characteristic not required in the application of the component in the product covered by this outline; or

b) Is superseded by a requirement in this outline.

2.3 A component shall be used in accordance with its rating established for the intended conditions of use.

2.4 Specific components are incomplete in construction features or restricted in performance capabilities. Such components are intended for use only under limited conditions, such as certain temperatures not exceeding specified limits, and shall be used only under those specific conditions.

3 Units of Measurement

3.1 The metric unit shall be designated as the official unit for purposes of this standard. Where values of measurement are specified in both SI and English units, either unit is used. In cases of dispute, the metric unit shall be used.

UL COPYRIGHTED MATERIAL –
NOT AUTHORIZED FOR FURTHER REPRODUCTION OR
DISTRIBUTION WITHOUT PERMISSION FROM UL

Documents
Document Sharing Hub

Copyright UL
Provided by IHS under license with UL
No reproduction or networking permitted without license from IHS
Full document details: UL SUBJECT 1384 2015

Licensee=North Carolina State Univ/5618801100
Not for Resale, 10/17/2015 13:39:28 MDT

4 Undated References

4.1 Any undated reference to a code or standard appearing in the requirements of this outline shall be interpreted as referring to the latest edition of that code or standard.

5 Glossary

5.1 For the purpose of this outline, the following definitions apply.

5.2 ACTUATOR ASSEMBLY – A pressure vessel pressurized with an inert gas or a liquid and inert gas that includes a valve; or a gas cartridge pressurized with an inert gas that includes a puncture disc, which upon automatic means of actuation, releases pressure resulting in the discharge process.

5.3 AUTOMATIC EXTINGUISHER UNIT – A unit that has no manual means of actuation and discharges extinguishing agent upon thermal actuation, and is intended for use in a normally unoccupied space and is limited to a single protected area.

5.4 CYLINDER/VALVE ASSEMBLY – A container that incorporates a valve and that provides storage of the extinguishing agent and expellant gas until the valve is actuated. For cartridge operated units, this assembly includes the dry chemical storage container and cartridge mechanism. When actuated, the valve releases the agent into the distribution network of the extinguisher unit.

5.5 DISCHARGE NOZZLE – A device that is used to uniformly distribute the extinguishing agent over or into a specific area, or within a specific volume, or both.

5.6 DISCHARGE RATE – The ratio of the quantity of agent discharged from a nozzle to the discharge time measured within ±1 second. When a minimum discharge rate is indicated, reference is made to the minimum quantity of agent discharged and the time measured within ±1 second.

5.7 DISCHARGE TIME – The time interval between the first appearance of extinguishing agent at the nozzle and the time at which the discharge becomes predominantly gaseous.

5.8 EXPELLANT GAS – Dry nitrogen, dry air, or other gas used to facilitate the discharge of the extinguishing agent.

5.9 GAS CARTRIDGE – A container that provides storage for an expellant gas.

5.10 HEPTANE – A commercial grade hydrocarbon used as a test fuel with the following characteristics:

Minimum Initial boiling point 88°C (190°F)

Maximum Dry point 100°C (212°F)

Specific gravity (60°F/60°F) (15.6°C/15.6°C) 0.69 - 0.73

5.11 METHOD OF ACTUATION, AUTOMATIC – A means of actuation that results in extinguishing agent discharge without the necessity of human intervention, such as a thermal actuating mechanism.

UL COPYRIGHTED MATERIAL –
NOT AUTHORIZED FOR FURTHER REPRODUCTION OR
DISTRIBUTION WITHOUT PERMISSION FROM UL

Documents
Document Sharing Hub

Copyright UL
Provided by IHS under license with UL
No reproduction or networking permitted without license from IHS
Full document details: UL SUBJECT 1384 2015

Licensee=North Carolina State Univ/5618801100
Not for Resale, 10/17/2015 13:39:28 MDT

5.12 OPERATING PRESSURE – The pressure in a fully charged cylinder/valve assembly or actuation assembly at 21°C (70°F).

5.13 OPERATING PRESSURE RANGE – The pressure range corresponding to the pressures within the agent storage container at the specified minimum and maximum temperatures for which the automatic extinguisher unit is intended to be operated.

5.14 OPERATING TEMPERATURE RANGE – The temperature range inclusive of the minimum and maximum temperatures for which the automatic extinguisher unit is intended to be stored, used, and operated.

5.15 PRESSURE VESSEL (CYLINDER) – A container that provides storage for dry chemical extinguishing agent and expellant gas, or when used at a location remote to the extinguisher unit, provides storage for expellant gas.

5.16 PROOF TEST PRESSURE – The factory test pressure of each cylinder used to evaluate cylinder leakage and construction integrity. For Department of Transportation (DOT) approved cylinders, the factory test pressure is specified in the appropriate DOT specification. For ASME vessels the factory test pressure is specified in Section VIII, Pressure Vessels of the ASME Boiler and Pressure Vessel Code. For non-DOT cylinders and non-ASME cylinders, the factory test pressure is at least three times the cylinder operating pressure at 70°F (21°C).

5.17 PROTECTED VOLUME – For fire tests, the volume within the protected enclosure, minus the volume of any permanent impermeable building elements within the enclosure.

5.18 TOTAL FLOODING – Discharge an extinguishing agent into and throughout an enclosed space to achieve a uniform distribution of the extinguishing agent.

5.19 WATER-BASED EXTINGUISHING AGENT – A fire-extinguishing medium consisting of water and additives to enhance performance.

CONSTRUCTION

6 General

6.1 After discharge of the extinguishing agent is initiated, an automatic extinguisher unit shall maintain the maximum rate of application of extinguishing agent without requiring a manual action.

6.2 All exposed parts of an automatic extinguisher unit and automatic extinguisher unit, including the finishes on coated or painted parts, nameplates as secured in place, attachments such as mounting brackets required for installation, assemblies of moving parts, or other similar parts, shall be resistant to commonly encountered atmospheric corrosive influences, and to galvanic corrosion, as determined by the Salt Spray Corrosion Test.

6.3 When the deterioration, breakage or other malfunction of a part for an automatic extinguisher unit presents a risk of the unit becoming inoperable, the part shall not be susceptible to stress cracking, as determined by the Stress Corrosion Cracking Test for Brass Parts.

UL COPYRIGHTED MATERIAL –
NOT AUTHORIZED FOR FURTHER REPRODUCTION OR
DISTRIBUTION WITHOUT PERMISSION FROM UL

Documents
Document Sharing Hub

Copyright UL
Provided by IHS under license with UL
No reproduction or networking permitted without license from IHS
Full document details: UL SUBJECT 1384 2015

Licensee=North Carolina State Univ/5618801100
Not for Resale, 10/17/2015 13:39:28 MDT

6.4 As covered by these requirements, an automatic extinguisher unit consists of:

a) Extinguishing agent storage container;

b) Actuating assembly;

c) Indicators that show the condition of the storage container and, when applicable, actuating assembly;

d) Discharge nozzle or nozzles; and

e) Mounting bracket(s).

6.5 An automatic extinguisher unit shall have a minimum operating temperature of no less than minus 54°C (minus 65°F) and a maximum operating temperature of no greater than 65°C (150°F).

6.6 The pressure vessels of storage containers shall comply with the requirements of the U.S. Department of Transportation (DOT) or local transport equivalent.

7 Controls and Indicators

7.1 An automatic extinguisher unit shall be provided with the following controls and indicators:

a) An automatic means of actuation only.

b) A pressure gauge for each pressure vessel of storage containers, showing the pressure within the container.

7.2 The thermal actuating mechanism of an automatic extinguisher unit shall comply with the applicable requirements of the Standard for Heat Responsive Links for Fire Protection Service, UL 33; or the Standard for Heat Detectors for Fire Protective Signaling Systems, UL 521.

7.3 An automatic extinguisher unit that requires setup of a device, such as the movement of a valve, to place the unit in the set condition shall be provided with a locking indicator on the device to maintain the unit in the set condition. A locking indicator shall be made of corrosion-resistant material and shall comply with the Salt spray Corrosion Test.

7.4 A locking indicator shall break when subjected to a force of 65 N (15 lb-f) or less when subjected to the Locking Indicator Test.

7.5 Upon activation, an automatic extinguisher unit intended for Class C applications shall include auxiliary equipment to shut down all sources of fuel and electric power to all equipment within the protected volume.

UL COPYRIGHTED MATERIAL –
NOT AUTHORIZED FOR FURTHER REPRODUCTION OR
DISTRIBUTION WITHOUT PERMISSION FROM UL

Documents
Document Sharing Hub

Copyright UL
Provided by IHS under license with UL
No reproduction or networking permitted without license from IHS
Full document details: UL SUBJECT 1384 2015

Licensee=North Carolina State Univ/5618801100
Not for Resale, 10/17/2015 13:39:28 MDT

8 Caps, Valves, and Closures

8.1 The fill opening of an automatic extinguisher unit shall have a minimum inside diameter of 6 mm (1/4 inch).

8.2 A collar with external threads shall be as high as required so the cap does not contact the dome or the bottom of the pressure vessel when the gasket is removed.

8.3 A threaded cap, closure, or valve shall engage the collar or the threaded opening by not less than four full threads with the gasket in place.

8.4 A cap, valve, or closure shall withstand the hydrostatic pressure test as specified for the pressure vessel.

8.5 A cap, plug, cylinder valve or other component except a pressure gauge, shall be provided with a means of relieving pressure when it is removed while the storage container is still under pressure. The pressure shall be relieved with not less than two threads engaged.

9 Pressure Vessels and Cylinders

9.1 A pressure vessel shall be fabricated of a material having rigidity, durability, and resistance to corrosion at least equivalent to:

a) A mild steel alloy, such as SAE 1010, having a minimum thickness of 0.71 mm (0.028 inch).

b) An aluminum alloy, such as 6061-T6, as referenced in the Standard Specification for Aluminum and Aluminum-Alloy Sheet and Plate, ASTM B209, having a minimum thickness of 0.71 mm (0.028 inch); or

c) An aluminum alloy, such as 1100, 1170, and 3003, having a minimum thickness of 0.71 mm (0.028 inch).

9.2 The requirements in this section do not apply to a pressure vessel tested and marked as complying with DOT or other appropriate national specifications, unless otherwise specifically indicated.

9.3 A pressure vessel under the jurisdiction of the U.S. Department of Transportation shall comply with the appropriate DOT specifications for shipping containers.

9.4 A pressure vessel under the jurisdiction of a transport authority other than the U.S. Department of Transportation shall comply with the appropriate national specifications for shipping containers.

9.5 For the purpose of these requirements, thickness measurements of the sidewall are to be measured on uncoated metal. The thickness of the dome and of the bottom is to be measured at several points after forming and before coating.

9.6 The minimum width of a brazed joint on the sidewall shall be at least four times the thickness of the sidewall.

UL COPYRIGHTED MATERIAL –
NOT AUTHORIZED FOR FURTHER REPRODUCTION OR
DISTRIBUTION WITHOUT PERMISSION FROM UL

Documents
Document Sharing Hub

Copyright UL
Provided by IHS under license with UL
No reproduction or networking permitted without license from IHS
Full document details: UL SUBJECT 1384 2015

Licensee=North Carolina State Univ/5618801100
Not for Resale, 10/17/2015 13:39:28 MDT

9.7 Pressure vessels with an operating pressure of 1660 kPa (241 psi) or less at 21°C (70°F) and an internal volume not exceeding 18 L (1100 cubic inches) for a non-liquefied compressed gas, or 900 mL (55 cubic inches) for a liquefied compressed gas, shall be constructed so that the stress in any part of the pressure vessel does not exceed 80 percent of the yield strength of the material or 50 percent of the ultimate tensile strength of the material when subjected to the proof test pressure as described in the Hydrostatic Pressure Test. (Reference 9.8 – 9.17).

Exception: Pressure vessels complying with 9.4 or 9.9 are not required to comply with this requirement.

9.8 With reference to the requirements of 9.7, the maximum stress at proof pressure for commonly used materials and fabricating processes shall not exceed the values specified in Table 9.1.

Table 9.1
Maximum stress at proof pressure

Material	Maximum stress	
	kPa	(psi)
Copper brazed mild steel	172,370	(25,000)
Welded mild steel	186,160	(27,000)
Extruded 6061-T6 aluminum	186,160	(27,000)
Extruded 3003 aluminum	110,315	(16,000)
Extruded 1100 aluminum	99,975	(14,500)
Extruded 1170 aluminum	75,840	(11,000)

9.9 When the metal and the maximum stress value of the fabricating method used is other than that specified in Table 9.1 or when the mode of use or construction is such that the values specified are not appropriate, tensile tests are to be conducted to determine the yield and ultimate strength of the material. Test samples are to be taken either from stock material or from finished parts in accordance with Standard Test Methods and Definitions for Mechanical Testing of Steel Products, ASTM A370. When samples are taken from ruptured pressure vessels, the samples are to be taken in a direction perpendicular to the ruptured opening, as determined when taken to rupture in the Hydrostatic Pressure Test. The maximum stress value is to be based upon the mean values resulting from the test series minus two unbiased standard deviations.

9.10 To determine the stress acting on the pressure vessel at the specified proof test pressure, the formulas specified in Figure 9.1 are to be used.

UL COPYRIGHTED MATERIAL –
NOT AUTHORIZED FOR FURTHER REPRODUCTION OR
DISTRIBUTION WITHOUT PERMISSION FROM UL

Documents
Document Sharing Hub

Copyright UL
Provided by IHS under license with UL
No reproduction or networking permitted without license from IHS
Full document details: UL SUBJECT 1384 2015

Licensee=North Carolina State Univ/5618801100
Not for Resale, 10/17/2015 13:39:28 MDT

Figure 9.1
Stress determination formulas

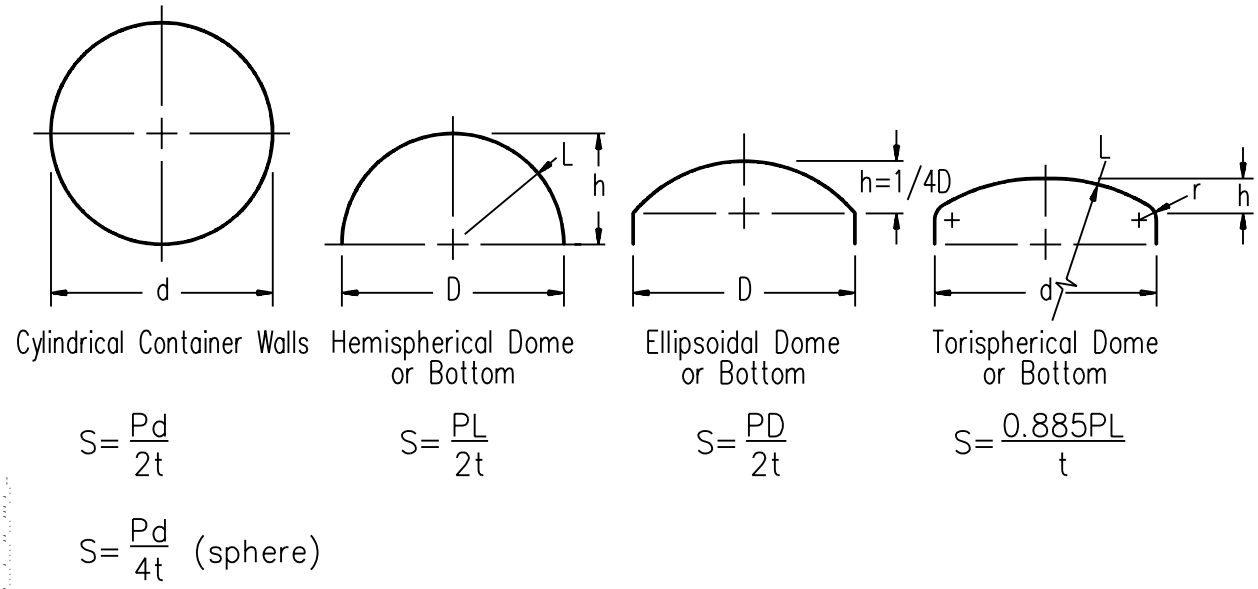

in which:

S is the stress at proof test pressure, kPa (psi)

P is the proof test pressure, kPa (psi)

d is the inside diameter (cylindrical portion of shell), mm (inches)

D is the inside diameter of dome or bottom, mm (inches)

L is the inside spherical radius or dish radius, mm (inches)

t is the material thickness, mm (inches)

r is the "Knuckle" radius, mm (inches)

h is the distance from outside crest of head to tangent point with sidewall, mm (inches)

UL COPYRIGHTED MATERIAL –
NOT AUTHORIZED FOR FURTHER REPRODUCTION OR
DISTRIBUTION WITHOUT PERMISSION FROM UL

Documents
Document Sharing Hub

Copyright UL
Provided by IHS under license with UL
No reproduction or networking permitted without license from IHS
Full document details: UL SUBJECT 1384 2015

Licensee=North Carolina State Univ/5618801100
Not for Resale, 10/17/2015 13:39:28 MDT

9.11 When the pressure is applied to the convex side of an ellipsoidal or torispherical dome or bottom, the material thickness of the dome and bottom used for the calculations of 9.10 is to be multiplied by a factor of 1.67.

9.12 The material of the dome and bottom of a metal pressure vessel shall be of the same material as the sidewall of the pressure vessel and shall have a thickness after forming equal to or greater than the minimum measured wall thickness of the pressure vessel.

Exception No. 1: When the dome or bottom is formed integral with the sidewall and its thickness after forming is less than the minimum measured sidewall thickness of the cylinder, the intent of this requirement is met when the measured dome or bottom thickness is more than 87 percent of the thickness of the sidewall which accounts for any reduction in thickness resulting from the forming process.

Exception No. 2: These requirements do not apply to pressure vessels with a flat dome or bottom as defined in 9.16.

9.13 A dome or bottom is evaluated as being integral with the sidewall when the distance from the point at which the dome or bottom is turned (the tangent point between the dome or bottom and the sidewall) to the nearest circumferential joint of the pressure vessel (excluding the collar) is greater than the radius of the sidewall to the center of the pressure vessel.

9.14 When a torispherical form dome or bottom is used, the knuckle radius r shall be not less than 6 percent of the inside dish radius L, and the cylinder diameter d shall be equal to or larger than the inside dish radius L. Reference Figure 9.1.

9.15 When either a flat dome or flat bottom is integral with the sidewall, the minimum thickness of the thinnest section of the dome or bottom shall be twice the minimum measured sidewall thickness. The minimum inside knuckle radius, r, shall be 2.5 percent of the inside diameter of the sidewall.

9.16 For the purpose of these requirements, the shape of a dome or bottom shall be determined by calculating the ratio of the inside diameter, D, of the dome or bottom to twice the distance from the outside crest of the head to the inside tangent point with the sidewall, h. The ratio (D/2h) then shall be applied as specified in Table 9.2.

Table 9.2
Shape determination of domes and bottoms

Ratio range	Shape
1.00 - 1.50	Hemispherical
1.51 - 3.00	Ellipsoidal
3.01 - 3.50	Ellipsoidal
Greater than 3.50	Flat

9.17 A flat dome or bottom shall be used only on seamless pressure vessels or on pressure vessels having a linear sidewall length greater than 1-1/2 times the sidewall inside diameter.

UL COPYRIGHTED MATERIAL –
NOT AUTHORIZED FOR FURTHER REPRODUCTION OR
DISTRIBUTION WITHOUT PERMISSION FROM UL

Documents
Document Sharing Hub

Copyright UL
Provided by IHS under license with UL
No reproduction or networking permitted without license from IHS
Full document details: UL SUBJECT 1384 2015

Licensee=North Carolina State Univ/5618801100
Not for Resale, 10/17/2015 13:39:28 MDT

10 Pressure Relief Devices for Pressure Vessels and Cylinders

10.1 Pressure vessels and cylinders that are tested and marked in accordance with the specifications for shipping containers of the DOT and are provided with pressure relief devices shall comply with the burst pressure requirements of the Pressure Relief Tests.

10.2 Pressure vessels and cylinders that are tested and marked in accordance with the specifications for shipping containers other than DOT and are provided with pressure relief devices shall comply with the burst pressure requirements as specified in the appropriate national specification.

10.3 Pressure vessels and cylinders provided with pressure relief devices shall comply with the flow capacity requirements of the Pressure Relief Tests.

11 Gaskets and ″O″ Rings

11.1 A gasket of an elastomeric material shall be of sufficient thickness to provide a compression-type seal. A seal, gasket, or an ″O″ ring that is integral to the construction of an aerosol generator or other component shall comply with the Elastomeric Parts Test.

11.2 A seal, gasket, or an ″O″ ring that is continuously exposed to pressure during intended service shall be made of a material compatible with the media to which it is exposed and comply with the Thirty-Day Elevated Temperature Test; Temperature Cycling Test; One-Year Time Leakage Test; and Elastomeric Parts Test.

12 Pressure Gauges for Pressure Vessels and Cylinders

12.1 An automatic extinguisher unit and a low pressure detection assembly or actuation assembly and valve assembly used for remote actuation shall be equipped with a pressure gauge to show the amount of pressure in the chamber whether the valve is opened or closed. The operating range of the gauge shall reflect the operating temperature-pressure relationship of an automatic extinguisher unit, except that the marked minimum operating pressure is permitted to be higher than the pressure that corresponds to the minimum operating temperature.

Exception: A pressure gauge is not required for a actuation assembly that is filled with carbon dioxide.

12.2 The pressure gauge face shall indicate the appropriate units for which the gauge is calibrated, such as kPa, kg/cm^2, psig or any combination of pressure units.

12.3 The maximum indicated gauge pressure shall be between 150 and 250 percent of the indicated operating pressure at 70°F (21°C). The gauge dial shall indicate in green the operating pressure range of the automatic extinguisher unit. The zero pressure, indicated operating pressure at 70°F (21°C), and maximum indicated pressure shall be shown with numerals and with identification marks. The background of the gauge face above a horizontal line through the lowest required markings shall be red. The arc of the dial from the zero pressure point to the lower end of the operating range shall read ″Recharge.″ The arc of the dial from the higher end of the operable range to the maximum indicated pressure shall read ″Overcharged.″ All numerals, letters, and characters in the recharge, operating, and overcharge portions of the dial shall be white. Pointers shall be yellow, and the tip of the pointer shall end in the arc of the pressure indicating dots, and shall have a maximum tip radius of 0.010 inch (0.25 mm). The minimum length of the pointer, from the center point of the dial to the tip, shall be 0.375 inch (9.53 mm) measured at the zero pressure point. The minimum length of the arc from zero pressure to the indicated operating pressure at 70°F (21°C) shall be 0.50 inch (12.7 mm) measured from the center line of the zero pressure identification mark to the center line of the indicated operating pressure mark at 70°F (21°C).

UL COPYRIGHTED MATERIAL –
NOT AUTHORIZED FOR FURTHER REPRODUCTION OR
DISTRIBUTION WITHOUT PERMISSION FROM UL
Documents
Document Sharing Hub

Copyright UL
Provided by IHS under license with UL
No reproduction or networking permitted without license from IHS
Licensee=North Carolina State Univ/5618801100
Not for Resale, 10/17/2015 13:39:28 MDT
Full document details: UL SUBJECT 1384 2015

12.4 The identification mark used for the indicated operating pressure at 70°F (21°C) shall be not less than 0.025 inch (0.6 mm) and not more than 0.040 inch (1.0 mm) wide.

12.5 The pressure gauge face shall be marked to indicate: ″Use with _____ Only. ″ The blank is to contain a description of the automatic extinguisher unit, detection assembly, or actuation assembly contents, as applicable.

12.6 The pressure gauge shall be marked with the gauge manufacturer's identifying mark. The pressure gauge shall also be marked according to the following, as applicable, using a line extending as wide as, and of the same stroke thickness as the manufacturer's identifying mark:

a) A horizontal line above the gauge manufacturer's identifying mark shall be used to indicate galvanic compatibility with aluminum valve bodies.

b) A horizontal line below the gauge manufacturer's identifying mark shall be used to indicate galvanic compatibility with brass valve bodies.

c) A horizontal line above and below the gauge manufacturer's identifying mark, or only the manufacturer's identifying mark without any additional lines shall be used to indicate galvanic compatibility with aluminum and brass valve bodies.

12.7 A pressure gauge shall have a pressure relief that provides for venting in the event of a Bourdon tube leak.

12.8 A high pressure nitrogen actuation assembly or detection assembly shall be provided with a gauge capable of indicating cylinder pressure whether the valve is open or closed. The gauge shall comply with the requirements of the Standard for Gauges, Indicating Pressure for Compressed Gas Service, UL 404.

13 Puncturing Mechanisms

13.1 The parts of a puncturing mechanism, with the exception of unexposed springs and pins, shall be made of nonferrous metal or corrosion-resistant stainless steel.

14 Siphon Tubes

14.1 A polymeric siphon tube shall be constructed of a material that has been subjected to the tests described in 47.2.1 – 47.2.3.

14.2 Joints between the siphon tube and valve shall be constructed so that they do not disengage during use, such as by being threaded, or locked in position by a setscrew.

14.3 The siphon tube shall be notched, scarfed, or otherwise prevented from restricting discharge in an unintended manner when the tip of the siphon tube is resting on the bottom of the shell.

UL COPYRIGHTED MATERIAL –
NOT AUTHORIZED FOR FURTHER REPRODUCTION OR
DISTRIBUTION WITHOUT PERMISSION FROM UL

Documents
Document Sharing Hub

Copyright UL
Provided by IHS under license with UL
No reproduction or networking permitted without license from IHS
Full document details: UL SUBJECT 1384 2015

Licensee=North Carolina State Univ/5618801100
Not for Resale, 10/17/2015 13:39:28 MDT

15 Extinguishing Agent

15.1 To qualify for a Class C rating, water or water based extinguishing agents shall have a maximum conductivity of 1.00 microsiemen/cm in accordance with the Standard Test Method for Electrical Conductivity and Resistivity of a Flowing High Purity Water Sample, ASTM 5391.

16 Expellant Gases

16.1 The compressed gas used in an automatic extinguisher unit, detector assembly, or actuator assembly shall be air, nitrogen, carbon dioxide, or other inert gas. The gas shall have a dew point of minus 40°C (minus 40°F) or lower.

Exception: When the automatic extinguisher unit minimum storage temperature is minus 40°C (minus 40°F), the gas shall have a dew point of minus 54°C (minus 65°F) or lower.

17 Polymeric Materials and Nonmetallic Parts

17.1 A polymeric or other nonmetallic part, other than ″O″ ring or gasket or aerosol-forming compound, shall be evaluated on the basis of:

a) Mechanical strength, reference Mounting Device Test; Hydrostatic Pressure Test; Burst Strength Test - Gauges; Nameplate Exposure Tests;

b) Moisture absorption, reference light and water test of the Aging Tests - Polymeric Materials; Salt Spray Corrosion Test; Nameplate Exposure Tests;

c) Flammability;

d) Resistance to deterioration due to aging, reference Aging Tests - Polymeric Materials; Nameplate Exposure Tests; and

e) Exposure to light reference light and water test of the Aging Tests - Polymeric Materials; Nameplate Exposure Tests.

17.2 For flammability as referenced in 17.1(c), polymeric materials of externally exposed parts shall be classified as Type HB, V-0, V-1, V-2, or 5V, when tested in accordance with the Standard for Tests for Flammability of Plastic Materials for Parts in Devices and Appliances, UL 94. Other nonmetallic materials shall have equivalent characteristics.

UL COPYRIGHTED MATERIAL –
NOT AUTHORIZED FOR FURTHER REPRODUCTION OR
DISTRIBUTION WITHOUT PERMISSION FROM UL

Documents
Document Sharing Hub

Copyright UL
Provided by IHS under license with UL
No reproduction or networking permitted without license from IHS
Full document details: UL SUBJECT 1384 2015

Licensee=North Carolina State Univ/5618801100
Not for Resale, 10/17/2015 13:39:28 MDT