UL 2930

Outline of Investigation for Cord-and-Plug-Connected Health Care Facility Outlet Assemblies

Issue Number: 2

March 27, 2018

Summary of Topics

This second issue of the Outline of Investigation for Cord-and-Plug-Connected Health Care Facility Outlet Assemblies, UL 2930, revises the Marking requirement to recognize that Patient Care Vicinities being equipped with "Patient Equipment Grounding Point" is optional, as identified in the title of NEC Section 517.19(D). 2018 NFPA 99 Health Care Facilities Code, also identifies the "governing body" has the overall responsibility for the operation of a health care facility, including patient equipment grounding point, Clause 6.3.2.5.2. It is up to the governing bodies at a healthcare facility to conducted a risk assessment in accordance with NFPA 99 and determine whether or not their facilities need Patient Equipment Grounding Points within the Patient Care Vicinities.

Also, references to Supplements of UL 498, 15th Edition, were correlated to the revised Supplement designations of UL 498, 16th Edition, in accordance with Paragraph 2.4.1.

UL's Outlines of Investigation are copyrighted by UL LLC. Neither a printed nor electronic copy of an Outline of Investigation should be altered in any way. All of UL's Outlines of Investigation and all copyrights, ownerships, and rights regarding those Outlines of Investigation shall remain the sole and exclusive property of UL LLC.

COPYRIGHT © 2018 UL LLC

UL COPYRIGHTED MATERIAL –
NOT AUTHORIZED FOR FURTHER REPRODUCTION OR
DISTRIBUTION WITHOUT PERMISSION FROM UL

Documents
Document Sharing Hub

Copyright UL
Provided by IHS Markit under license with UL
No reproduction or networking permitted without license from IHS
Full document details: UL SUBJECT 2930 2018

Licensee=/, User=,
Not for Resale,

No Text on This Page

UL COPYRIGHTED MATERIAL –
NOT AUTHORIZED FOR FURTHER REPRODUCTION OR
DISTRIBUTION WITHOUT PERMISSION FROM UL

Documents
Document Sharing Hub

Copyright UL
Provided by IHS Markit under license with UL
No reproduction or networking permitted without license from IHS
Licensee=/, User=,
Not for Resale,
Full document details: UL SUBJECT 2930 2018

CONTENTS

INTRODUCTION

1 Scope 5
2 General 6
2.1 Use 6
2.2 Components 7
2.3 Units of measurement 7
2.4 Undated references 7
3 Glossary 7

CONSTRUCTION

4 General 9
5 Enclosures 10
5.1 General 10
5.2 Metallic 10
6 Mechanical Assembly 11
7 Accessibility of Live Parts 11
8 Mounting Means 13
9 Corrosion Protection 13
10 Insulating Materials 13
11 Power-Supply Cord 14
11.1 General 14
12 Strain Relief 14
13 Receptacles 15
13.1 General 15
13.2 Receptacle covers 15
14 Supplementary Protection Device 16
15 Live Parts 16
16 Internal Wiring 16
17 Physical protection of conductors 17
18 Spacings 18
19 Printed-Wiring Boards 19
20 Grounding 19
20.1 General 19
20.2 Bonding 20
20.3 Patient equipment grounding terminal 21
20.4 Patient equipment grounding conductor 22

PERFORMANCE

21 General 22
22 Temperature Test 22
23 Dielectric Voltage-Withstand Test 24
24 Leakage Current Test 25
25 Grounding Continuity Test 27
26 Fault Current Test 28
26.1 General 28
26.2 Calibration of test circuits 28
27 Overcurrent Test 29

UL COPYRIGHTED MATERIAL –
NOT AUTHORIZED FOR FURTHER REPRODUCTION OR
DISTRIBUTION WITHOUT PERMISSION FROM UL

Documents
Document Sharing Hub

Copyright UL
Provided by IHS Markit under license with UL
No reproduction or networking permitted without license from IHS
Full document details: UL SUBJECT 2930 2018

Licensee=/, User=,
Not for Resale,

28 Mounting Hole Barrier Tests 30
28.1 General 30
28.2 Mounting hole barrier impact test 30
28.3 Mounting hole barrier probe test 31
29 Strain Relief Test 32
30 Enclosure Tests 33
30.1 General 33
30.2 Drop impact test 34
30.3 Steel sphere impact test 34
31 Crushing Test 38
32 Enclosure Integrity Test 38
33 Adequacy of Mounting Test 43
34 Receptacle Outlet Cover Test 44
35 Marking Durability 45
36 Permanence of Cord Tag Test 45
36.1 General 45
36.2 Conditioning 46
36.3 Test method 46

RATINGS

37 Details 46

MARKINGS

38 Details 47

INSTRUCTIONS

39 General 49

APPENDIX A

Standards for Components A1

UL COPYRIGHTED MATERIAL –
NOT AUTHORIZED FOR FURTHER REPRODUCTION OR
DISTRIBUTION WITHOUT PERMISSION FROM UL

Documents
Document Sharing Hub

Copyright UL
Provided by IHS Markit under license with UL
No reproduction or networking permitted without license from IHS
Licensee=/, User=,
Not for Resale,
Full document details: UL SUBJECT 2930 2018

INTRODUCTION

1 Scope

1.1 These requirements cover indoor-use cord-and-plug-connected Health Care Facility receptacle outlet assemblies (HCOA) rated 250 V AC or less and 20 Amperes or less. HCOA are for use as a movable power supply connection for cord-and-plug-connected medical electrical utilization equipment in accordance with the National Electric Code, NFPA 70, Article 517 Health Care Facilities, and with NFPA 99, Health Care Facilities Code, for use in Category 2 (General Patient Care) Spaces or Category 1 (Critical Patient Care) Spaces, including Patient Care Vicinities equipped with Patient Equipment Grounding Points.

1.2 HCOAs are intended to supply cord-and-plug-connected medical equipment complying with applicable requirements of the:

a) Standard for Medical Electrical Equipment, Part 1: General Requirements, UL 60601-1;

b) Medical electrical equipment – Part 1: General requirements for basic safety and essential performance, IEC 60601-1; and

c) Medical Electrical Equipment – Part 1-2: General Requirements for basic safety and essential performance – Collateral standard: Electromagnetic disturbances – Requirements and tests, ANSI/AAMI 60601-1-2.

1.3 These requirements cover HCOA consisting of an ANSI/NEMA WD 6-configuration Hospital Grade attachment plug and a length of non-detachable flexible cord terminated in an enclosure in which are mounted ANSI/NEMA WD 6-configuration Hospital Grade individual receptacle outlets (duplex or single) which are connected conductively to an integral patient equipment grounding terminal or jack provided for user connection of a discrete patient equipment grounding conductor to Patient Equipment Grounding Points, installed in the Patient Care Vicinities of a Health Care Facility.

1.4 An HCOA is not intended for Home Health Care Use.

1.5 These requirements do not cover cord-connected, Relocatable Power Taps (RPT) intended only for indoor use as a temporary extension of a grounding alternating-current branch circuit for general use, covered by the Standard for Relocatable Power Taps, UL 1363. RPT are not suitable for use in Category 2 (General Patient Care) Spaces or Category 1 (Critical Patient Care) Spaces or Patient Care Vicinities.

1.6 These requirements do not cover cord-connected, Special Purpose Relocatable Power Taps (SPRPT); covered by the Outline of Investigation for Special Purpose Relocatable Power Taps, UL 1363A. SPRPT are power distribution components intended to supply power to plug-connected components of a movable equipment assemblies that are rack, table, or pedestal-mounted. SPRPT are intended for use as components of complete equipment submitted for investigation rather than for direct separate installation in the field. The SPRPT shall be an integral part of the equipment assembly and permanently attached to the equipment assembly only by those qualified to assemble medical electrical equipment systems compliant with Medical electrical equipment – Part 1: General requirements for basic safety and essential performance, IEC 60601-1. SPRPT are not suitable for use in Patient Care Vicinities.

UL COPYRIGHTED MATERIAL –
NOT AUTHORIZED FOR FURTHER REPRODUCTION OR
DISTRIBUTION WITHOUT PERMISSION FROM UL

--`,,```,,,,``-`-`,,`,,`,`,,`---

Documents
Document Sharing Hub

Copyright UL
Provided by IHS Markit under license with UL
No reproduction or networking permitted without license from IHS
Licensee=/, User=,
Not for Resale,
Full document details: UL SUBJECT 2930 2018

1.7 These requirements do not cover cord-connected, Furniture Power Distribution Units (FPDU), intended for indoor use that provide power for and are intended to be installed in furnishings. FPDU are covered by the Standard for Furniture Power Distribution Units, UL 962A.

2 General

2.1 Use

2.1.1 A HCOA is intended to be connected temporarily to a permanently-installed branch circuit Hospital Grade receptacle outlet and, where the health care facility's governing body has determined that use of Patient Equipment Grounding Points are essential in Patient Care Vicinities, to patient equipment grounding points permanently installed in the patient care spaces of a Health Care Facility.

2.1.2 A HCOA is intended for cord-and-plug connection of medical utilization equipment that has been authorized by the Health Care Facility in which the HCOA is deployed and the medical utilization equipment has been verified as having touch and leakage current suitably low for patient care use.

2.1.3 A HCOA is intended to be mounted to benches, stands, carts, or other areas containing multiple cord-and-plug-connected medical electrical utilization equipment that is intended and authorized for use in that patient care use location.

2.1.4 A HCOA is not intended to be series-connected ("daisy chained") to:

a) Other HCOA's;

b) Relocatable Power Taps;

c) Furniture Power Distribution Units, or;

d) Extension cords.

A HCOA is not intended to be connected via a grounding adapter or via a current tap to a receptacle outlet.

2.1.5 A HCOA is not intended to be placed directly upon the floor of a patient care space.

2.1.6 A HCOA is not intended to be used within Hazardous (Classified) Anesthetizing Locations or any other Hazardous (Classified) Locations as defined by the National Electric Code, NFPA 70.

UL COPYRIGHTED MATERIAL –
NOT AUTHORIZED FOR FURTHER REPRODUCTION OR
DISTRIBUTION WITHOUT PERMISSION FROM UL

Documents
Document Sharing Hub

Copyright UL
Provided by IHS Markit under license with UL
No reproduction or networking permitted without license from IHS
Licensee=/, User=,
Not for Resale,
Full document details: UL SUBJECT 2930 2018

2.2 Components

2.2.1 Except as indicated in 2.2.2, a component of a product covered by this standard shall comply with the requirements for that component. See Appendix A for a list of standards covering components used in the products covered by this standard.

2.2.2 A component is not required to comply with a specific requirement that:

a) Involves a feature or characteristic not required in the application of the component in the product covered by this standard, or

b) Is superseded by a requirement in this standard.

2.2.3 A component shall be used in accordance with its rating established for the intended conditions of use.

2.2.4 Specific components are incomplete in construction features or restricted in performance capabilities. Such components are intended for use only under limited conditions, such as certain temperatures not exceeding specified limits, and shall be used only under those specific conditions.

2.3 Units of measurement

2.3.1 Values stated without parentheses are the requirement. Values in parentheses are explanatory or approximate information.

2.3.2 Unless otherwise indicated, all voltage and current values mentioned in this standard are root-mean-square (rms).

2.4 Undated references

2.4.1 Any undated reference to a code or standard appearing in the requirements of this Outline of Investigation shall be interpreted as referring to the latest edition of that code or standard.

3 Glossary

3.1 ANESTHETIZING LOCATION – Any area of a facility that has been designated to be used for the administration of any flammable or nonflammable inhalation anesthetic agent in the course of examination or treatment, including the use of such agents for relative analgesia.

3.2 ATTACHMENT PLUG – A male contact device for the temporary connection of a flexible cord or cable to a receptacle outlet or cord connector.

3.3 HEALTH CARE FACILITY OUTLET ASSEMBLY (HCOA) – A metallic electrical enclosure provided with an attached power supply cord, attachment plug for connection to a permanently installed branch circuit receptacle outlet and provided with a patient equipment grounding terminal or jack for connection to a permanently installed Patient Equipment Grounding Point. The electrical enclosure may be provided with one to six individual receptacle outlets (duplex or single). The HCOA may also be provided in any combination of the following configurations:

a) Provided with indicator lights.

b) Provided with a surge protective device (SPD) that complies with 4.2.

UL COPYRIGHTED MATERIAL –
NOT AUTHORIZED FOR FURTHER REPRODUCTION OR
DISTRIBUTION WITHOUT PERMISSION FROM UL

Documents
Document Sharing Hub

Copyright UL
Provided by IHS Markit under license with UL
No reproduction or networking permitted without license from IHS
Full document details: UL SUBJECT 2930 2018

Licensee=/, User=,
Not for Resale,

c) Provided with an electromagnetic interference (EMI) filter that complies with the requirements of 4.1.

3.4 HEALTH CARE FACILITY'S GOVERNING BODY – The person or persons who have the overall legal responsibility for the operation of a health care facility, including risk assessment policies, resources, and risk management processes, building components (such as the availability and function of a patient equipment grounding terminal).

3.5 MEANS FOR MOUNTING – A method of securement of the HCOA to another object.

3.6 NOMINAL DISCHARGE CURRENT (In) – Peak value of the current, selected by the manufacturer, through a Surge Protective Device (SPD) having a current wave shape of 8/20 where the SPD remains functional after 15 surges.

3.7 PATIENT CARE VICINITY – A Health Care Facility space, within a location intended for the examination and treatment of patients, extending 6 ft (1.8 m) beyond the normal location of the patient bed, chair, table, treadmill, or other device that supports the patient during examination and treatment, and extending vertically to 7 ft 6 in. (2.3 m) above the floor.

3.8 PATIENT EQUIPMENT GROUNDING CONDUCTOR – A user-connected insulated conductor, other than supplied in the power supply cord, to provide a return grounding path connection from the mounting yokes of Hospital Grade receptacles of the HCOA and also from the unenergized accessible metal parts of the HCOA to a permanently-installed Patient Equipment Grounding Point of the Health Care Facility.

3.9 PATIENT EQUIPMENT GROUNDING POINT – A Health Care Facility terminal or jack that serves as the collection point for return grounding of electrical appliances serving a patient care vicinity or for grounding other items in order to eliminate electromagnetic interference problems.

3.10 PATIENT EQUIPMENT GROUNDING TERMINAL – A terminal or jack bonded to the HCOA enclosure and conductively connected to the mounting yokes of Hospital Grade receptacles of the HCOA for user-connection of a patient equipment grounding conductor provided as a return ground path to the permanently-installed patient equipment grounding point of the Health Care Facility.

3.11 RECEPTACLE OUTLET – A female contact device mounted within an electrical enclosure to allow a detachable electrical connection of an attachment plug. A duplex receptacle consists of two female contact devices on the same receptacle yoke and is considered to be two receptacle outlets for the purpose of requirements in this standard.

3.12 SUPPLEMENTARY PROTECTOR DEVICE – A device intended for use as overcurrent, over- or under-voltage, or over-temperature protection within electrical equipment where branch circuit overcurrent protection is already provided.

3.13 8/20 CURRENT WAVE – Current surge with a virtual front time of 8 μs and a time to half-value of 20 μs delivered into a short circuit.

UL COPYRIGHTED MATERIAL –
NOT AUTHORIZED FOR FURTHER REPRODUCTION OR
DISTRIBUTION WITHOUT PERMISSION FROM UL

Documents
Document Sharing Hub

Copyright UL
Provided by IHS Markit under license with UL
No reproduction or networking permitted without license from IHS
Full document details: UL SUBJECT 2930 2018

Licensee=/, User=,
Not for Resale,

CONSTRUCTION

4 General

4.1 A HCOA that has an electromagnetic interference filter shall also comply with applicable requirements for cord-connected EMI Filters in the Standard for Electromagnetic Interference Filters, UL 1283. Electromagnetic Interference Filters used in HCOA shall not be connected to either the equipment grounding conductor or the patient equipment grounding terminal. (i.e. No L-G or N-G connection mode).

4.2 A HCOA employing surge protective components shall also comply with the applicable requirements for cord-connected, Type 3 Surge Protective Device (SPD) in the Standard for Surge Protective Devices, UL 1449. The allowable leakage current or touch current shall not exceed 0.1 mA.

4.3 A HCOA employing surge protective components shall also comply with a minimum 3 kA Nominal Discharge Current Rating In when tested in accordance with Standard for Surge Protective Devices, UL 1449.

4.4 Component Surge Protective devices installed in a HCOA may only be connected between the ungrounded (line) and grounded (neutral) conductors. Component Surge Protective devices shall not be connected between the ungrounded (line) conductor and the grounding conductor (patient equipment ground), nor between the grounded (neutral) conductor and the grounding conductor (patient equipment ground).

4.5 A HCOA shall not have either a manual or automatic switch that disconnects power from any of the HCOA receptacle outlets.

4.6 A HCOA shall not be provided with any supplementary protection device that disconnects power from any of the HCOA receptacle outlets.

4.7 A HCOA shall not be provided with any Circuit-Interrupter device that disconnects power from any receptacle outlet. Examples of circuit interrupter device include but are not limited to:

a) Ground-Fault Circuit Interrupters (GFCI);

b) Appliance Leakage-Current Interrupters (ALCI);

c) Arc-Fault Circuit Interrupters (AFCI); and

d) Equipment Leakage-current Interrupters (ELCI).

4.8 A HCOA that is provided with an integral power supply with one or more Class 2 output connectors shall comply with the applicable requirements of the Standard for Class 2 Power Units, UL 1310. A HCOA that employs receptacles provided with an integral power supply with Class 2 output connectors shall comply with the applicable requirements Supplements SC and SE of the Standard for Attachment Plugs and Receptacles, UL 498. Where provided, the Class 2 output connectors shall be investigated to the Leakage Current Test, Section 24, and comply with its leakage current limits.

UL COPYRIGHTED MATERIAL –
NOT AUTHORIZED FOR FURTHER REPRODUCTION OR
DISTRIBUTION WITHOUT PERMISSION FROM UL

Documents
Document Sharing Hub

Copyright UL
Provided by IHS Markit under license with UL
No reproduction or networking permitted without license from IHS
Full document details: UL SUBJECT 2930 2018

Licensee=/, User=,
Not for Resale,

5 Enclosures

5.1 General

5.1.1 The enclosure shall be formed of metal only and assembled so that it has the strength and rigidity required to resist the abuses to which it is subjected, without resulting in a risk of fire, electric shock, or injury to persons due to total or partial collapse with resulting reduction of spacings, loosening or displacement of parts or other serious defects. See the Enclosure Integrity Test, Section 32. See Sections 28 – 34.

5.1.2 The enclosure shall not have any openings or knockouts that are capable of being used for connection to a permanent wiring system.

5.1.3 A keyhole slot, notch, or similar means for mounting shall be located and configured so that the supporting screws or the like cannot damage any electrical insulation, reduce spacings to live parts, or fluid to enter the enclosure of an HCOA.

5.1.4 A barrier that covers a mounting hole and thereby forms part of the required enclosure shall be subjected to the Mounting Hole Barrier Tests, Section 28.

5.1.5 Enclosure parts shall be secured together by a positive means. Press fit alone is not considered a positive means of securement.

5.1.6 The enclosure shall be provided with a means for mounting. The mounting means shall comply with Mounting Means, Section 8.

5.2 Metallic

5.2.1 A HCOA shall have a metal enclosure with a minimum thickness in accordance with Table 5.1.

Table 5.1
Minimum thicknesses of enclosure metal

	At small, flat unreinforced surfaces and at surfaces of a shape or size to provide adequate mechanical strength,		At relatively larger unreinforced flat surfaces,	
Metal	**in**	**(mm)**	**in**	**(mm)**
Die-cast metal	3/64	(1.2)	5/64	(2.0)
Cast malleable iron	1/16	(1.6)	3/32	(2.4)
Other cast metal	3/32	(2.4)	1/8	(3.2)
Uncoated sheet steel	0.026	(0.66)	0.026	(0.66)
Galvanized sheet steel	0.029	(0.74)	0.029	(0.74)
Nonferrous sheet metal	0.036	(0.91)	0.036	(0.91)

UL COPYRIGHTED MATERIAL –
NOT AUTHORIZED FOR FURTHER REPRODUCTION OR
DISTRIBUTION WITHOUT PERMISSION FROM UL

Documents
Document Sharing Hub

Copyright UL
Provided by IHS Markit under license with UL
No reproduction or networking permitted without license from IHS
Full document details: UL SUBJECT 2930 2018

Licensee=/, User=,
Not for Resale,

6 Mechanical Assembly

6.1 A HCOA shall be formed and assembled so as to reduce the risk of contact with any sharp edges, fins, burrs or the like that are capable of increasing the risk of injury to persons or cause abrasion of the insulation on conductors.

6.2 A lampholder, power-supply cord and its strain-relief bushing, receptacle, or similar component shall be mounted securely and, except as noted in 6.3, shall be restrained from turning. See 6.4.

6.3 A lampholder of a type in which the lamp is not intended to be replaced, such as a neon pilot or an LED indicator light in which the lamp is sealed is not required to be restrained from turning where the rotation is not capable of reducing spacings below the minimum acceptable values.

6.4 The means by which the turning specified in 6.2 is prevented is to include more than friction between surfaces. For example, a lock washer, properly applied, is not prohibited from being used as a means to restrain turning of a device having a single-hole mounting means.

7 Accessibility of Live Parts

7.1 The electrical parts of a HCOA that do not require use of a tool for access shall be located or enclosed so that persons are protected against inadvertent contact with uninsulated live parts and film-coated magnet wire.

7.2 An opening in the enclosure of a HCOA is not prohibited where an uninsulated live part or film-coated magnet wire is not capable of being contacted by the probe shown in Figure 7.1. The probe shall be applied to any depth that the opening permits, and shall be rotated or angled before, during, and after insertion through the opening to any position that is required to examine the enclosure. The probe shall be applied in any possible configuration; and, when required, the configuration shall be changed after insertion through the opening.

7.3 The probe shall be used as a measuring instrument to evaluate the accessibility provided by an opening, and not as an instrument to evaluate the strength of a material; it shall be applied with a force of not more than 6.7 lbf (30 N) to determine accessibility.

UL COPYRIGHTED MATERIAL –
NOT AUTHORIZED FOR FURTHER REPRODUCTION OR
DISTRIBUTION WITHOUT PERMISSION FROM UL

Documents
Document Sharing Hub

Copyright UL
Provided by IHS Markit under license with UL
No reproduction or networking permitted without license from IHS
Full document details: UL SUBJECT 2930 2018

Licensee=/, User=,
Not for Resale,

Figure 7.1
Accessibility probe

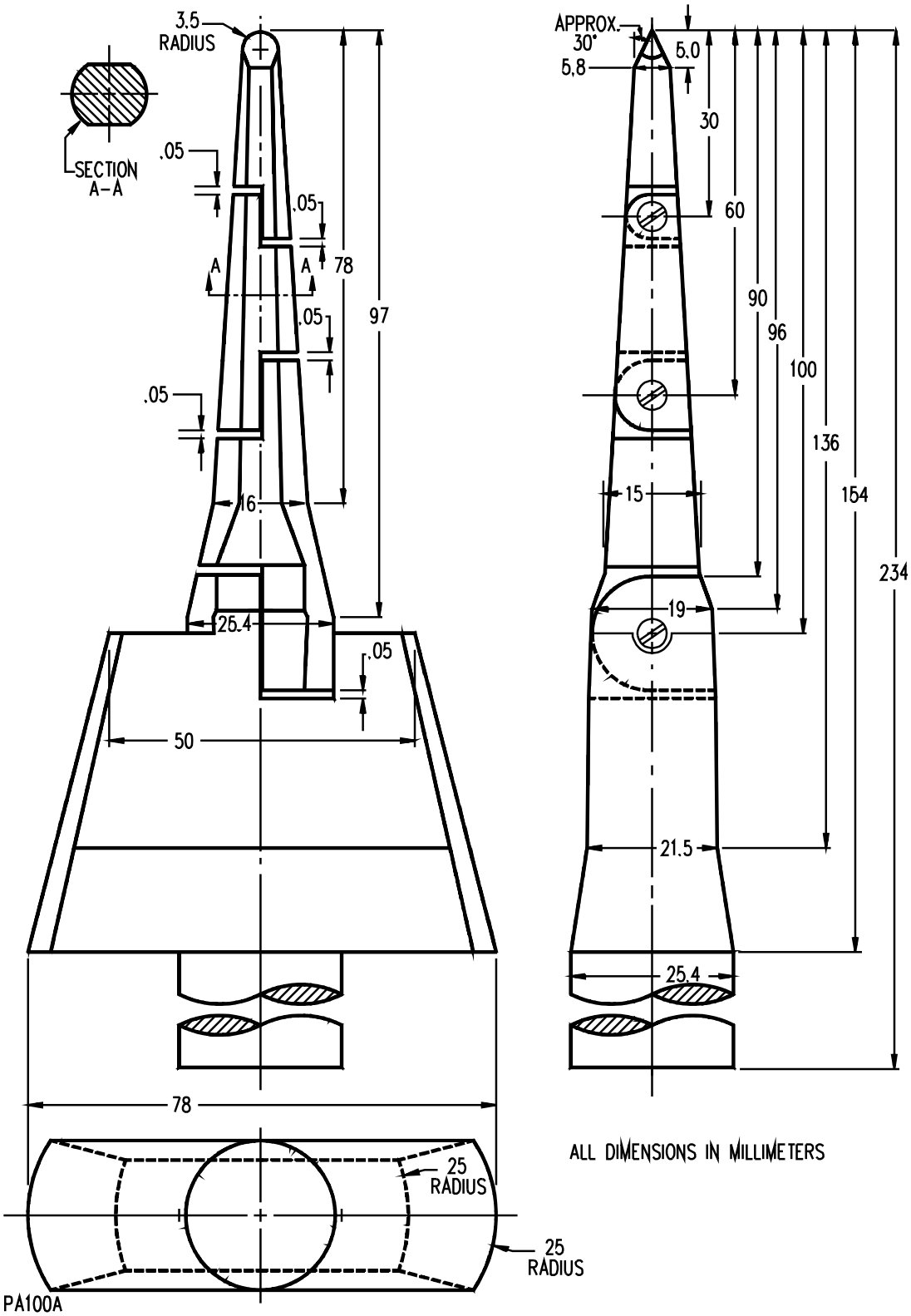

UL COPYRIGHTED MATERIAL –
NOT AUTHORIZED FOR FURTHER REPRODUCTION OR
DISTRIBUTION WITHOUT PERMISSION FROM UL

Documents
Document Sharing Hub

Copyright UL
Provided by IHS Markit under license with UL
No reproduction or networking permitted without license from IHS
Full document details: UL SUBJECT 2930 2018

Licensee=/, User=,
Not for Resale,

7.4 Openings in an enclosure shall prevent insertion of a test rod having a diameter of 1/16 in ± 0.0005 in. (1.6 mm ± 0.005 mm). The test rod is to be applied with a force of not more than 0.5 lbf (2.2 N) and is to be angled during application to any position that is necessary to examine the enclosure. The contacts of a receptacle outlet shall not be evaluated.

8 Mounting Means

8.1 A HCOA shall incorporate a means for permanent mounting. An HCOA may also incorporate an additional means for relocatable mounting.

8.2 A keyhole slot, notch, or similar means for mounting shall employ a barrier (see Figure 28.1) that shall be sealed to prevent fluid from entering into the enclosure of an HCOA.

8.3 The mounting means shall comply with the Mounting Hole Barrier Test, Section 29, and the Adequacy of Mounting Test, Section 33.

9 Corrosion Protection

9.1 Iron and steel parts or other parts not inherently corrosion resistant shall be protected against corrosion by painting, enameling, galvanizing, powder coating, plating, or other equivalent means and shall also comply with Paragraph 9.1 of the Standard for Metallic Outlet Boxes, UL 514A, for corrosion protection as applicable.

Exception: Minor parts of iron or steel, such as washers, screws and the like that are not in the grounding conductor path are not required to comply with this requirement.

10 Insulating Materials

10.1 A barrier or integral part, such as an insulating washer or bushing, and a base or support for the mounting of live parts, shall be of a moisture-resistant material that will not be damaged by the temperature and stresses to which it will be subjected under conditions of actual use.

10.2 An insulating material is to be investigated with regard to its acceptability for the application in accordance with the Standard for Polymeric Materials – Use in Electrical Equipment Evaluations, UL 746C. Materials, such as mica, ceramic, or some molded compounds are capable of being used as the sole support of live parts. When it is required to investigate a material to determine its acceptability, consideration is to be given to such factors as its mechanical strength, resistance to ignition sources, dielectric strength, insulation resistance, and heat-resistant properties in both the aged and unaged conditions, the degree to which it is enclosed, and any other features affecting the risk of fire and electric shock.

10.3 Vulcanized fiber, industrial laminates, polymeric films or similar materials are capable of being used for insulating bushings, washers, separators, and barriers, but not as sole support for uninsulated live parts. Hard rubber is not to be used.

Exception: Industrial laminates that have been investigated for the purpose are capable of being used as sole support for uninsulated live parts.

UL COPYRIGHTED MATERIAL –
NOT AUTHORIZED FOR FURTHER REPRODUCTION OR
DISTRIBUTION WITHOUT PERMISSION FROM UL
Documents
Document Sharing Hub
Copyright UL
Provided by IHS Markit under license with UL
No reproduction or networking permitted without license from IHS
Licensee=/, User=,
Not for Resale,
Full document details: UL SUBJECT 2930 2018

11 Power-Supply Cord

11.1 General

11.1.1 The power supply cord shall be of the grounding type and shall employ one of the following flexible cord Types: SJ, SJE, SJO, SJT, SJTO, SJEO, S, SE, SO, ST, STO, SEO, or equivalent.

11.1.2 A detachable power supply cord shall not be used.

11.1.3 The minimum conductor size of the power supply cord shall be 12 AWG copper when the HCOA employs four or more 15 ampere receptacle outlets (or two or more 15 ampere duplex receptacles, counting as four or more receptacle outlets) and No 14 AWG copper when the HCOA employs three or less 15 ampere receptacle outlets. The minimum conductor size of the power supply cord shall be No. 12 AWG copper when the HCOA employs 20 ampere receptacle outlets.

11.1.4 The length of a power-supply cord – as measured from the outside surface of the enclosure of the HCOA to the plane of the face of the attachment plug shall not exceed 15 ft (4.57 m) nor be less than 3 ft (914 mm).

11.1.5 The power-supply cord shall not include a through-cord switch.

11.1.6 The power supply cord shall be provided with a 20 ampere rated Hospital Grade attachment plug that complies with the Standard for Attachment Plugs and Receptacles, UL 498, Supplement SC for Hospital Grade Devices.

Exception: A HCOA provided only with 15 ampere rated receptacle outlets may be provided with a 15 ampere rated Hospital Grade attachment plug that complies with UL 498, Supplement SC for Hospital Grade Devices.

11.1.7 A power supply cord provided with an integrally molded-on attachment plug fitting shall comply with the Hospital Grade Attachment Plug Program of the Standard for Cord Sets and Power-Supply Cords, UL 817.

12 Strain Relief

12.1 Strain relief shall be provided so that a mechanical stress on a power supply cord or on the external Patient Equipment Grounding Terminal is not transmitted to terminals, splices, or internal wiring. See Strain Relief Test, Section 29.

12.2 The strain relief means shall be provided with a means to prevent rotational forces (twisting) applied to the cord from being transmitted to terminals, splices, or internal wiring.

12.3 The strain relief means shall not damage the insulation or cord jacket. The normal compressive deformation inherent in providing strain relief is not considered to be damage.

UL COPYRIGHTED MATERIAL –
NOT AUTHORIZED FOR FURTHER REPRODUCTION OR
DISTRIBUTION WITHOUT PERMISSION FROM UL

Documents
Document Sharing Hub

Copyright UL
Provided by IHS Markit under license with UL
No reproduction or networking permitted without license from IHS
Full document details: UL SUBJECT 2930 2018

Licensee=/, User=,
Not for Resale,

13 Receptacles

13.1 General

13.1.1 The receptacle outlets of a HCOA shall have a current rating of 15 or 20 A and a voltage rating of 125 or 250 V. The contact components of a receptacle shall have a voltage and current rating equal to that of the attachment plug on the power-supply cord.

Exception: A 15 A receptacle is not prohibited from being employed in a HCOA rated 20 A with a 20 A attachment plug.

13.1.2 All of the receptacle outlets of a HCOA shall be of the grounding type.

13.1.3 The receptacle outlets of a HCOA shall comply with the applicable requirements in the Standard for Attachment Plugs and Receptacles, UL 498, Supplement SC for Hospital Grade Devices.

13.1.4 An isolated ground receptacle shall not be employed in a HCOA.

13.1.5 The maximum number of receptacle outlets allowed in a HCOA shall be six single outlets or three duplex outlets.

13.1.6 A tamper-resistant receptacle that complies with the applicable requirements in the Standard for Attachment Plugs and Receptacles, UL 498, including Supplement SC for Hospital Grade Devices, may be employed in a HCOA.

13.1.7 A receptacle outlet shall not be secured to a HCOA enclosure by a single mounting screw.

13.1.8 A HCOA employing receptacle outlets that are red in color shall be marked in accordance with 38.15 and the receptacles shall be provided with indicator lights or illuminated faces to indicate when the receptacle outlets are energized.

13.1.9 A receptacle outlet shall be secured and bonded directly to the same metal part of an HCOA enclosure to which the Patient Equipment Grounding Terminal is mounted and bonded.

13.2 Receptacle covers

13.2.1 HCOA receptacle outlets shall be provided with a cover or covers to impede ready access without the use of a tool or key to the receptacle outlet(s).

13.2.2 A receptacle outlet cover shall comply with the Receptacle Outlet Cover test when in the secured closed position. See Section 34.

13.2.3 The cover or covers impeding ready access to the HCOA receptacle outlets, or the HCOA enclosure adjacent to the cover(s), shall be marked in accordance with 38.12.

13.2.4 A tamper-resistant receptacle outlet that complies with the applicable requirements in the Standard for Attachment Plugs and Receptacles, UL 498, and that is not additionally provided with a cover to prevent access to the receptacle outlet(s) is considered not comply with the requirements of 13.2.1 and 13.2.2

UL COPYRIGHTED MATERIAL –
NOT AUTHORIZED FOR FURTHER REPRODUCTION OR
DISTRIBUTION WITHOUT PERMISSION FROM UL

Documents
Document Sharing Hub

Copyright UL
Provided by IHS Markit under license with UL
No reproduction or networking permitted without license from IHS
Full document details: UL SUBJECT 2930 2018

Licensee=/, User=,
Not for Resale,

14 Supplementary Protection Device

14.1 Supplementary protection devices, if provided in a HCOA, shall not disconnect power from any receptacle outlet. (Example: Supplementary protection devices may be provided as part of a USB circuit or Surge Protective Device, but are not permitted to be connected such that opening of a supplementary protection device would also disconnect power from a receptacle outlet.).

15 Live Parts

15.1 Current-carrying parts shall have adequate ampacity, and shall be of copper, a copper-base alloy, or other material determined to be acceptable for the use.

15.2 Uninsulated live parts shall be secured to the base or mounting surface so that they do not turn or shift in position, when such motion results in a reduction of spacings below the minimum acceptable values.

15.3 Friction between surfaces is not to be used as the sole means to prevent shifting or turning of live parts. A lock washer is not prohibited from being used in such a manner.

16 Internal Wiring

16.1 The internal conductors shall be minimum 14 AWG copper when provided with a 15 ampere rated attachment plug and shall be 12 AWG when a 20 ampere rated attachment plug is provided.

16.2 Internal wiring shall be routed and secured to reduce the risk of mechanical damage to the insulation or stress on wiring terminations. The internal wiring shall be positively routed away from any exposed screw threads.

16.3 Screw threads, including those of sheet metal screws, shall not be exposed for more than 3/16 in (4.76 mm) inside a compartment containing wiring and shall be located so that contact with conductor insulation is unlikely.

16.4 Where a Printed Wiring Board (PWB) is used for internal conductors, the PWB shall comply with Printed Wiring Boards, Section 19.

16.5 All splices and connections shall be mechanically secure and shall provide sufficient ampacity. A soldered connection shall be made mechanically secure before being soldered.

Exception: Printed-wiring board joints positioned in the ungrounded or grounded conductor path (neutral), are not required to be mechanically secure before soldering. A printed-wiring board joint in any grounding path shall be mechanically secured before soldering.

16.6 A lead is considered to be mechanically secure when it is:

a) Wrapped at least halfway (180 degrees) around a terminal;

b) Provided with at least one right angle bend when passed through an eyelet or opening, or;

c) Twisted with other conductors.

UL COPYRIGHTED MATERIAL –
NOT AUTHORIZED FOR FURTHER REPRODUCTION OR
DISTRIBUTION WITHOUT PERMISSION FROM UL

Documents
Document Sharing Hub

Copyright UL
Provided by IHS Markit under license with UL
No reproduction or networking permitted without license from IHS
Full document details: UL SUBJECT 2930 2018

Licensee=/, User=,
Not for Resale,